Installation

1 Install the mounting plate to the outlet box by screws.

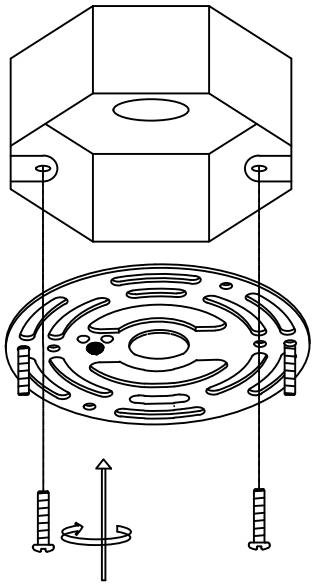

2 Combine the rod to suitable length and put the wire through it, then install to the canopy.

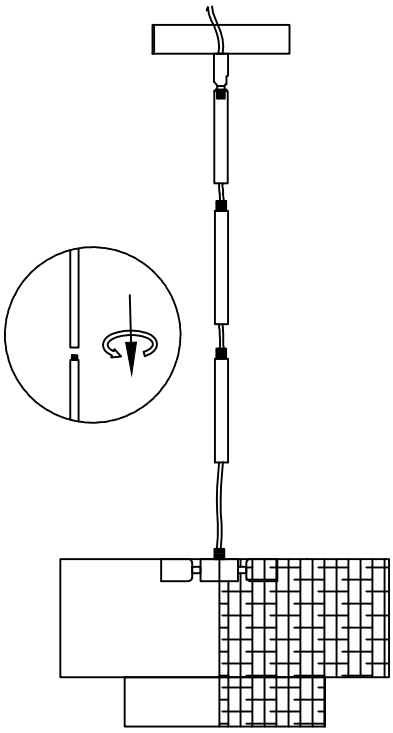

3 Connect the wire by connector, and fix the canopy to the mounting plate by ball nut.

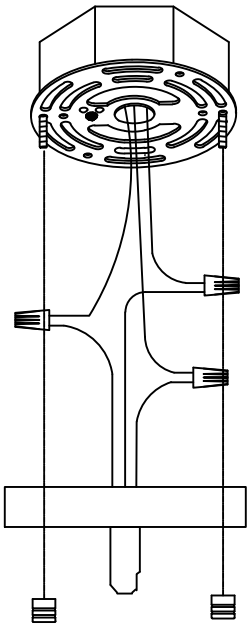

4 Install E26 bulbs.

