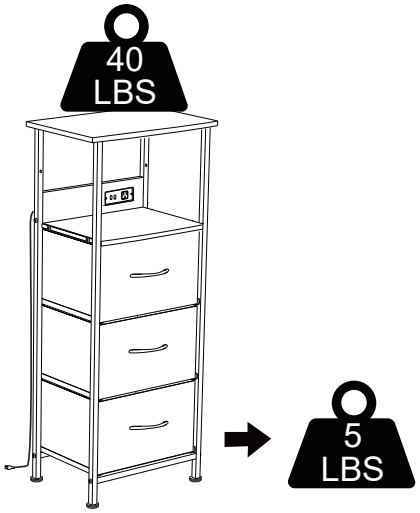

Thank you for your purchase!

3 Drawer Storage Chest with Charging Station

ASSEMBLY INSTRUCTIONS

Before You Begin: A power drill, Phillips screwdriver, and rubber mallet required for assembly (Not Included).

Please identify all component parts and hardware pieces required before you begin. Carefully remove all of the components from the packaging and set aside for assembly. Assemble on a soft surface to prevent scratching during assembly.

Caution:
Tighten all components securely before use. Failure to do so may result in personal injury.
DO NOT use any sharp objects to open plastic wrapped components as damage to product or components may result.

Warning:

CHOKING HAZARD - Small Parts. Adult Assembly Required.

DO NOT ALLOW CHILDREN TO CLIMB ON FURNITURE

Serious or fatal injuries can occur from furniture tipping over. You must install Tipping Restraint Hardware (where included) to help prevent the unit from tipping and causing accidental injury, instability, death or damage. The tipping restraint is intended only as a safety measure, it is not a substitute for proper adult supervision.

To help prevent furniture from tipping over it must be permanently attached to the wall. Anti-Tip Safety Wall Straps suitable for the unit weight and wall materials (if not included) should be purchased and installed.

PARTS

① Side Frames	A B	1
② Wooden Top		1
③ Lower Braces		2
④ Screw	M6X10mm	4
⑤ Floor Gildes		4
⑥ Screw	M6X25mm	4
⑦ Screw	M5X30mm	4
⑧ Drawer Flooring		3
⑨ Shelf Panel		1

⑩ Screw	M5.5X50mm	4
⑪ Wall Mount Kit		2
⑫ Wrench		1
⑭ Hex Wrench		1
⑮ Drawer		3
⑯ Backboard		1
⑰ Handles		3
⑱ Socket		1

STEP 1

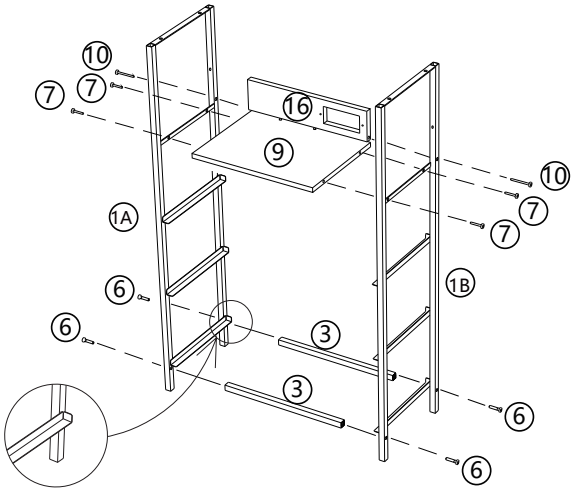

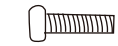
⑥ 4pcs

⑩ 2pcs

⑦ 4pcs

⑭ 1pc

⑨ 1pc

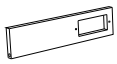
⑯ 1pc

STEP 2

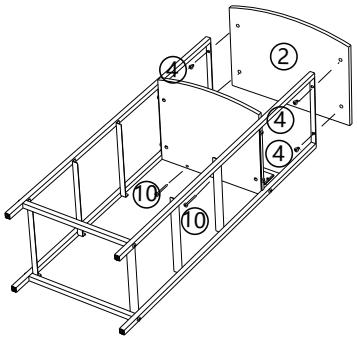

② 1pc

⑩ 2pcs

④ 4pcs

⑭ 1pc

STEP 3

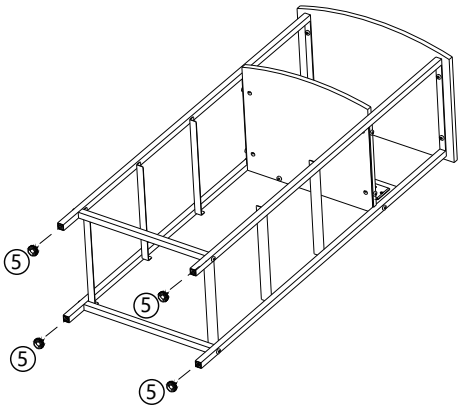

⑤ 4pcs

STEP 4

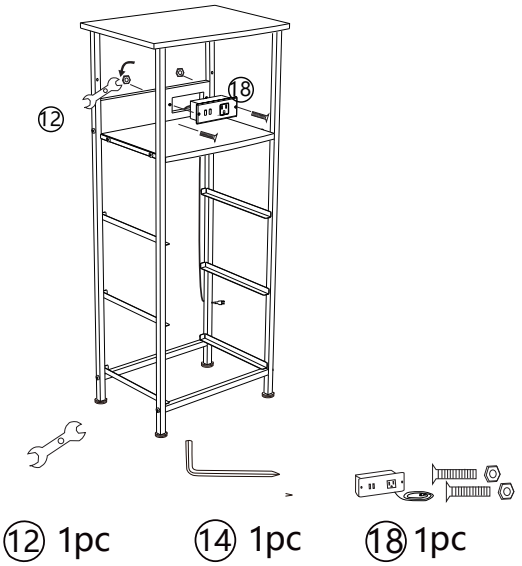

STEP 5

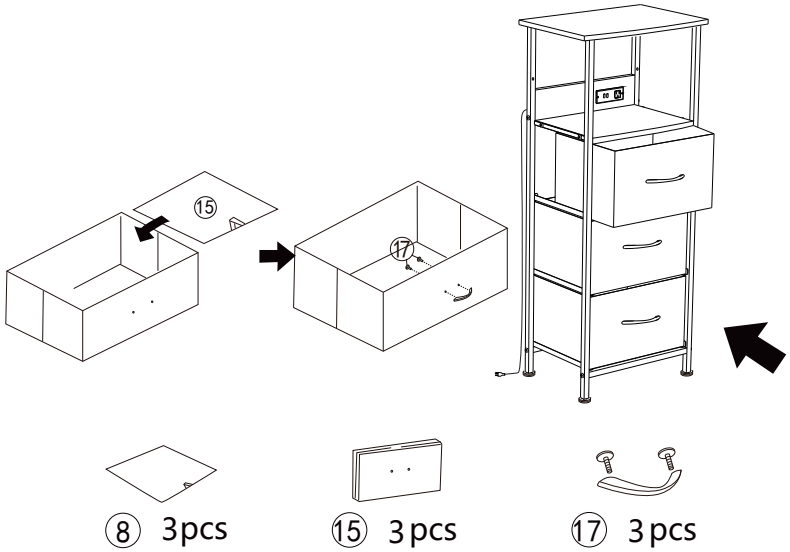

STEP 6

Unwind the power cord and place the dresser in the desired location near an outlet. Wrap the Anti-Tip Straps around the frame on the left and right sides and ensure the metal grommets are overlapping.
Mark the wall where the wall anchors will be inserted. Drill the pilot holes then gently tap the wall anchors into position with a rubber mallet.

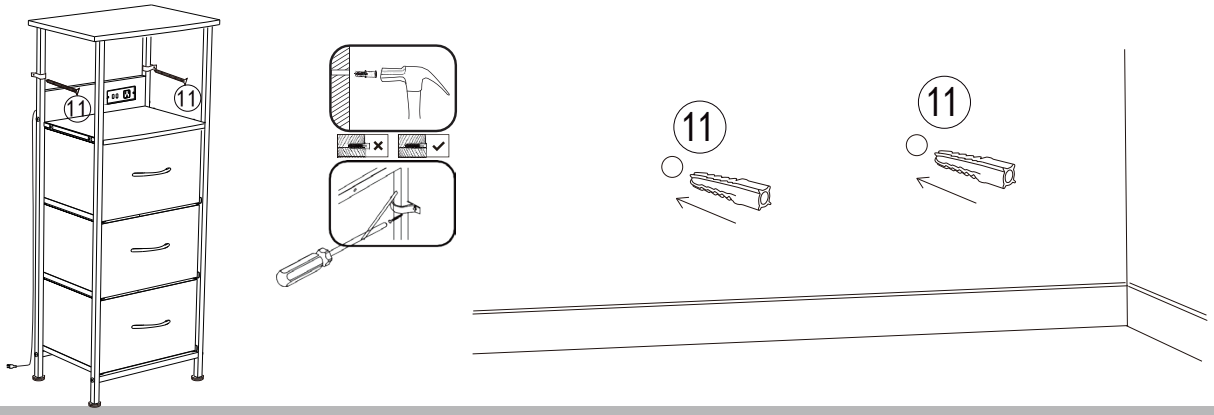

STEP 7

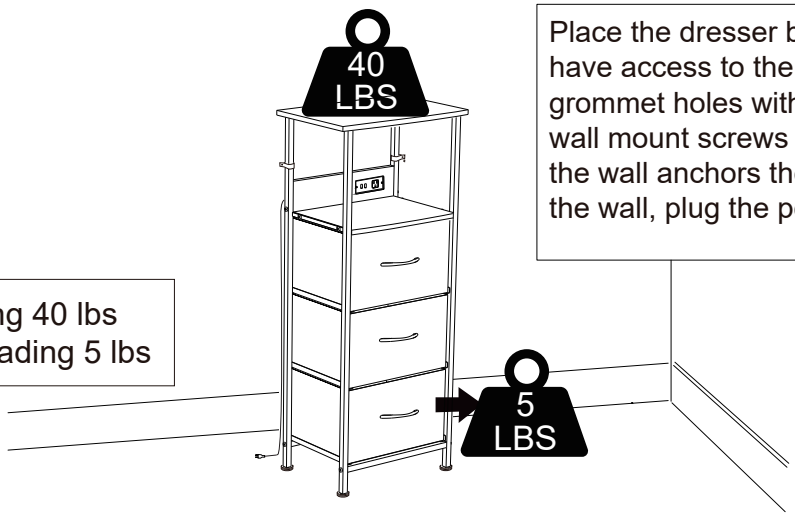

Place the dresser back into position, ensuring you have access to the power cord, then align the grommet holes with the wall anchors. Insert the wall mount screws through the grommets and into the wall anchors then tighten. Once attached to the wall, plug the power cord into the wall outlet.

Top max loading 40 lbs
Drawer max loading 5 lbs