Installation Instructions

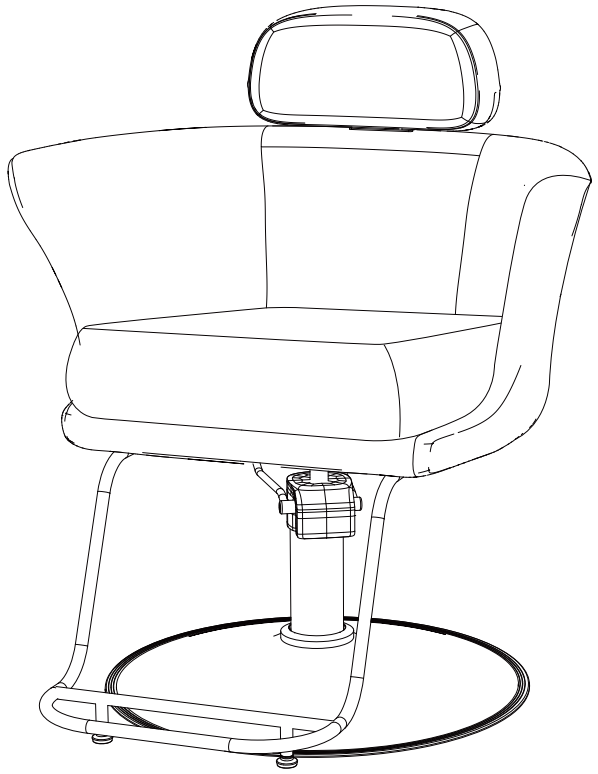

Parts Included

A*1

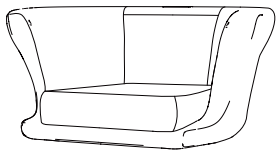

Seat

B*1

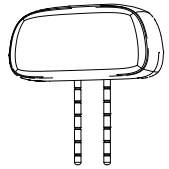

Headrest

C*1

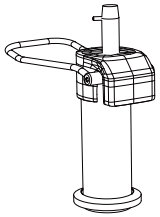

pump

D*1 E*1 F*6 G*6



Wrench Screws

H*1

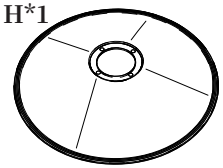

Base

I*1

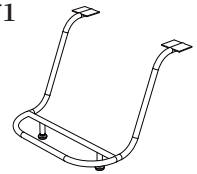

Footrest

① **Attach the pump to the base**

D1*1 F*6 G*6 H*1

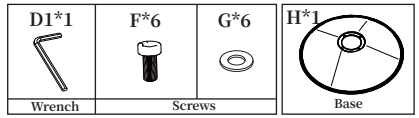

Wrench Screws Base

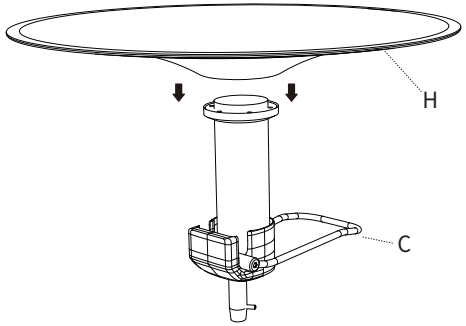

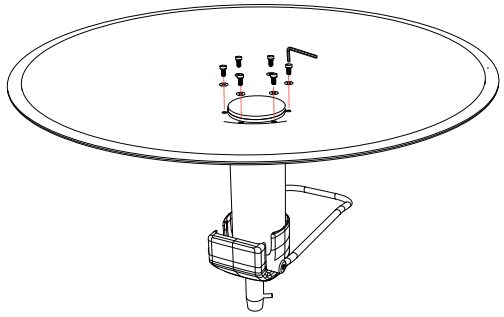

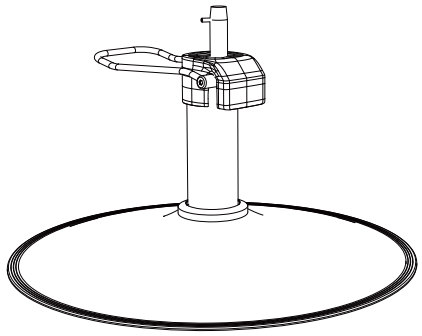

1-1.Turn the pump upside down, insert the Base.

1-2.Secure the base onto the pump using 6 black screws and the wrench (Make sure the screws are tightened to prevent chairs from rocking after installation.)

1-3.Turn the Pump to the upright position.

2 Install the seat to the pump

2-1.Place the seat onto the hydraulic pump (please note the pin on the pump toward the gap of he pump joint).

A*1

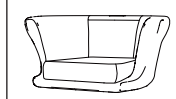

Seat

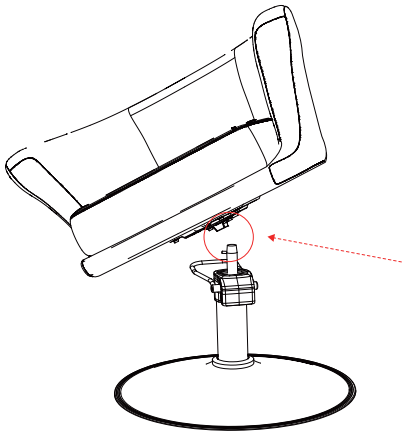

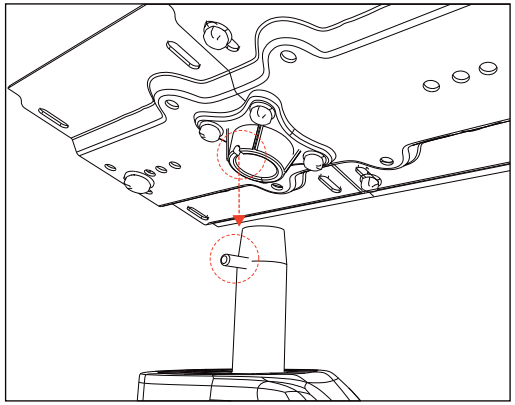

3 Install the footrest

3-1..Turn the seat upside down and use the wrench plovided to remove the 4 screws pre-installed on the seat and keep them for the next step.

3-2. Align the screw holes on the footrest and seat, and re-tighten the 4 screws removed from the previous step.

I*1

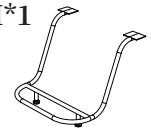

Footrest

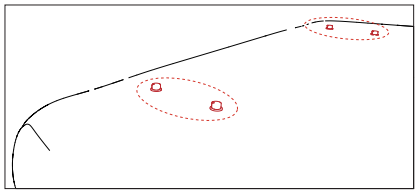

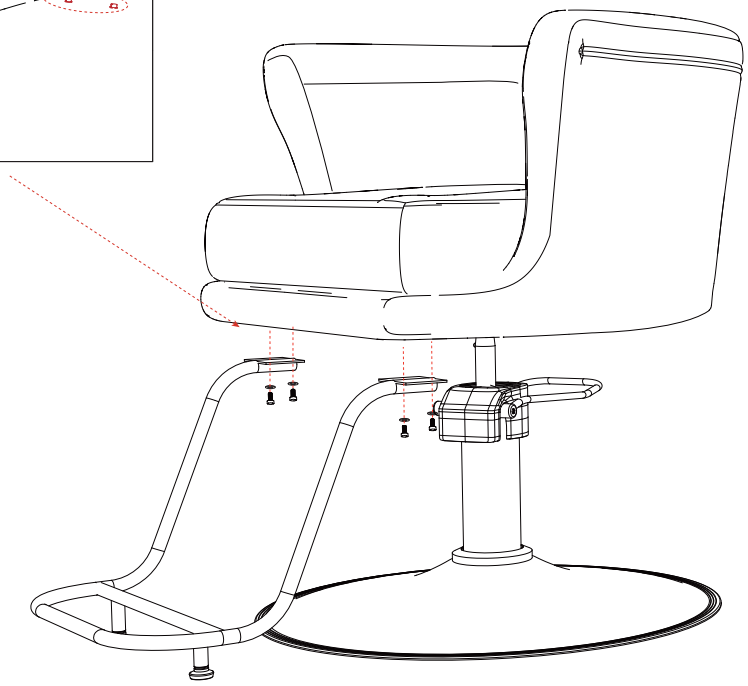

4 Install the backrest

4-1. Insert the headrest into the backrest.

B*1

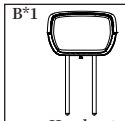

Headrest

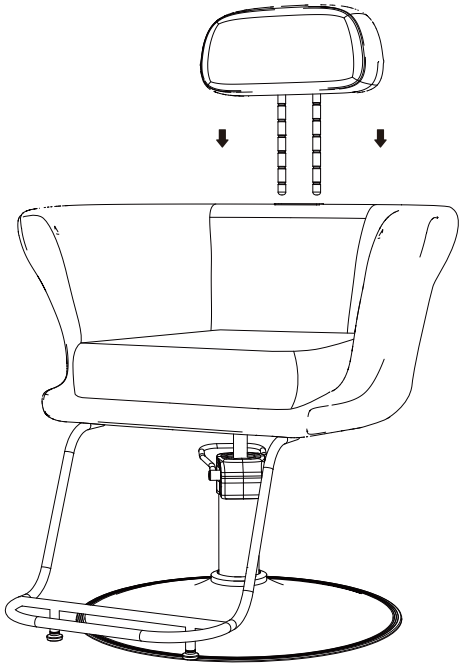

Congratulations! You have completed the installation.

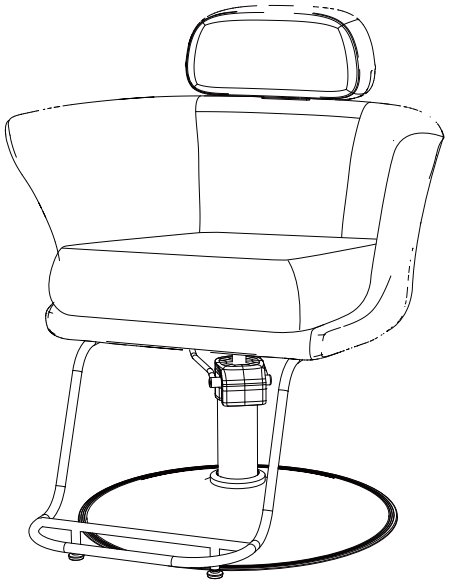

Chair Operation Guide

1

Locking or Unlocking the Chair's Swivel Function

This chair has a locking feature.

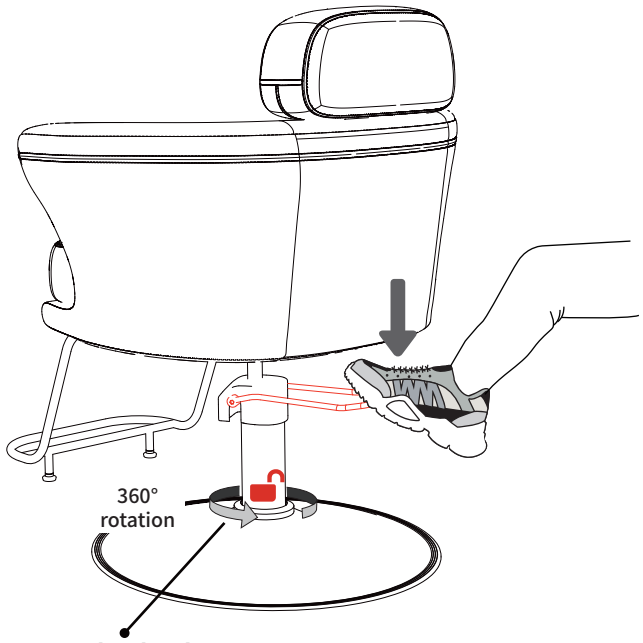

1-1. Unlocking the Chair

Press down the step pedal while rotating the chair; at this point, the chair can swivel.

2 Adjusting the Chair Height

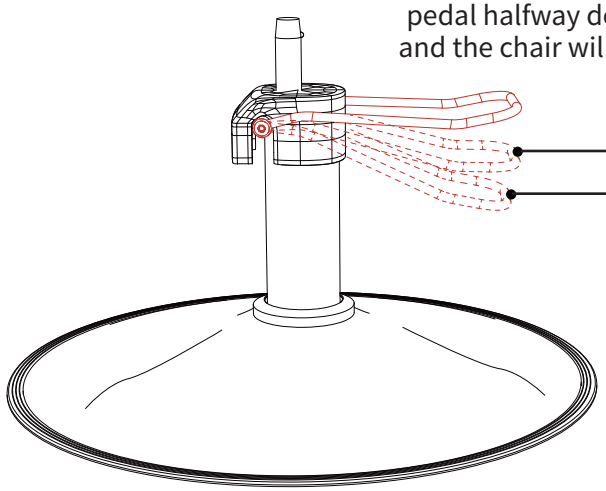

2-1. Raising the Chair

Continuously press the step pedal halfway down, and the chair will rise.

2-2. Lowering the Chair

Press the step pedal all the way down and hold it, and the chair will lower.

3

Locking or Unlocking the Chair's Swivel Function

This chair has a locking feature.

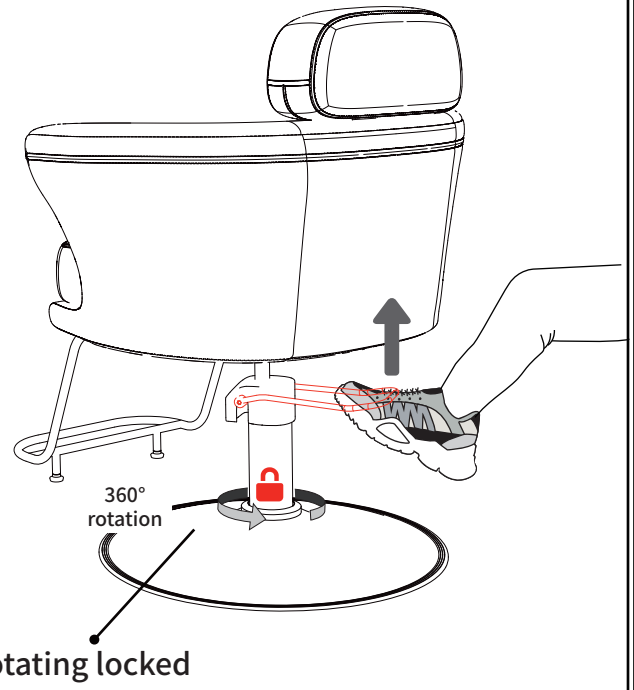

3-1. Locking the Chair

Lift the step pedal upwards, and the internal oil pump will lock, preventing the chair from rotating.

Correct Way to Leave the Chair to Avoid Tipping

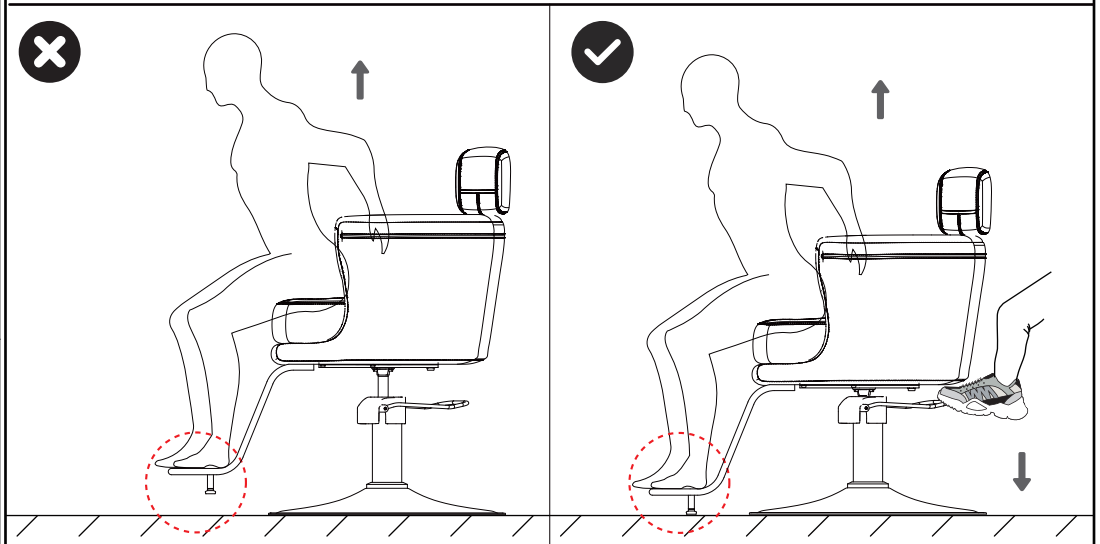

Incorrect Example:

There is a significant distance between the support rod and the ground, stepping on the foot pedal at this time may cause the chair to tip forward.

Correct Example:

Lower the chair to the lowest position, the support rod will close to the ground, you can safely step on the foot pedal and leave the chair.

Trouble and Solution

NO.	Trouble	Potential Issues	Solution
1	The pump is not working.	The pump's lift function is not working properly.	Please refer to section 2 of the operation guide to check if the operation is correct.
2		Cannot swivel.	Please refer to section 3 of the operation guide to check if the operation is correct. If the chair still has difficulty rotating, please repeat lifting the foot pedal and then pressing it down while rotating the chair several times. This should make the chair easier to rotate.
3	The pump is making unusual noises.	There is air inside the pump.	Because it's brand new, there may be some air inside the pump. Please repeatedly lift and lower the chair to expel the air.
4	The chair is wobbling.	Loose connection between the pump and the base.	Please check the screws underneath the base and tighten them again.
5	Missing screws.	Some screws are pre-installed.	Most screws are pre-installed on the chair's components. Please check again to see if there are screws in the screw holes on the chair's components.
6	Missing parts.	The chair is shipped in two packages.	If your chair is shipped in two separate packages, we will send you the tracking numbers for both packages after the chair has been shipped. Please keep an eye out for them. The two packages may not arrive simultaneously.
7	Damaged	The chair leather, metal, and other accessories are damaged.	If you find any damage to the chair after receiving it, please do not rush to return it. Please contact us and provide pictures of the damage in your message so that we can quickly identify the required parts. We will promptly send you the replacement parts.
8	Other issues	Contact Us	If you have any further questions, please feel free to contact us. In order for us to better understand and resolve the issue quickly, please provide relevant pictures or videos related to the problem in your email.

WARNING:

ANY PACKING BAGS OF THIS PRODUCT ARE NOT TOYS. TO AVOID THE DANGER OF SUFFOCATION, KEEP AWAY FROM BABIES AND CHILDREN. DO NOT USE IN CRIBS OR BEDS.