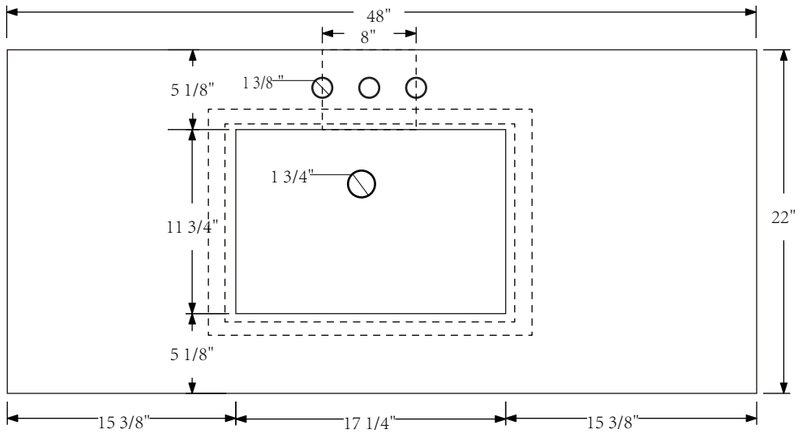

TOP VIEW

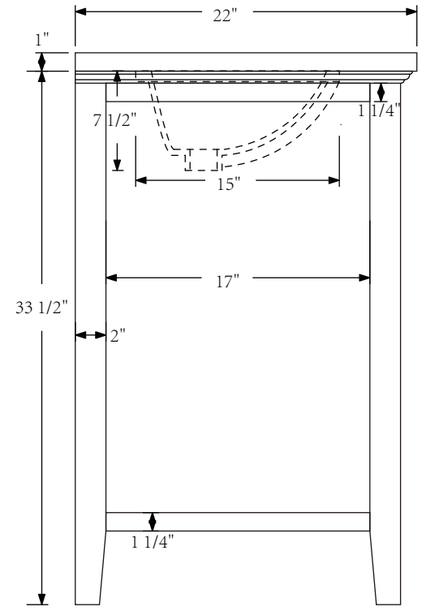

SIDE VIEW

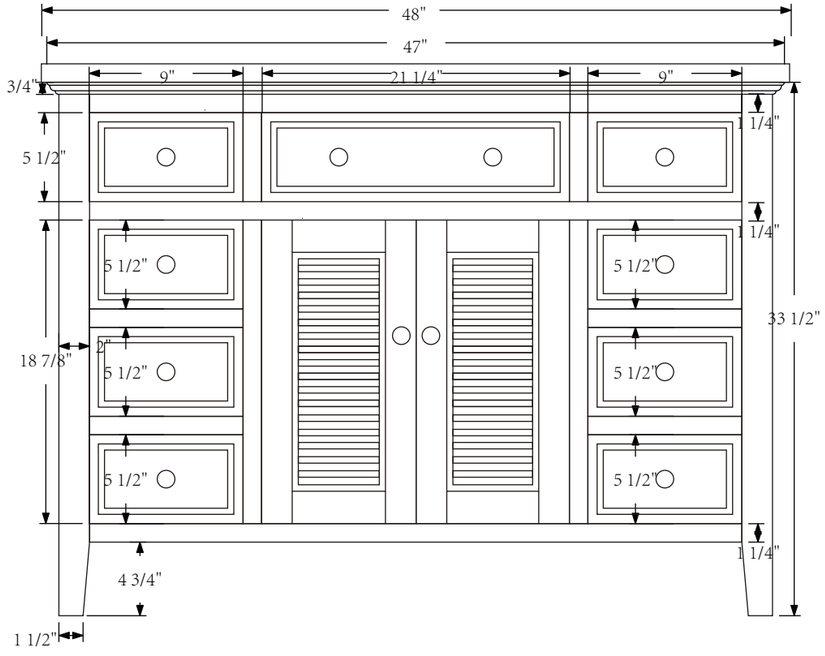

FRONT VIEW

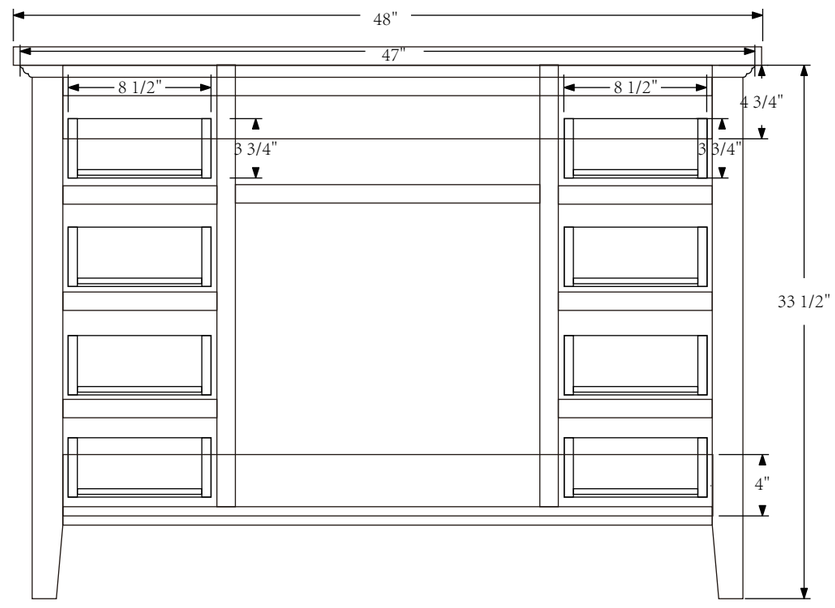

BACK VIEW

Dimensions are nominal and may vary within tolerances.The measurements are subject to change or cancellation.No responsibility is assumed for use of superseded or voided pages.