STEP1

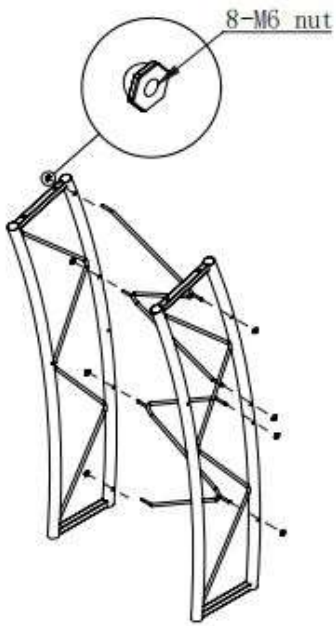

STEP2

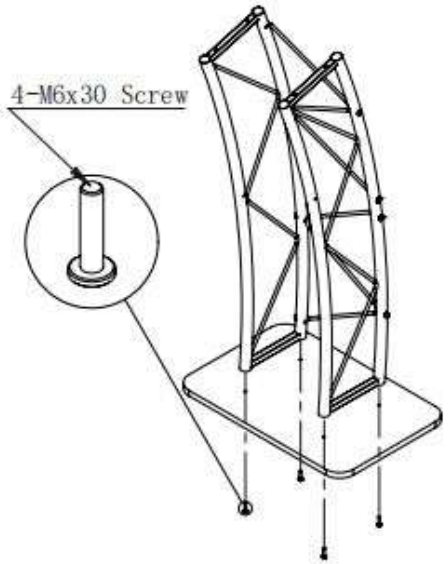

STEP3

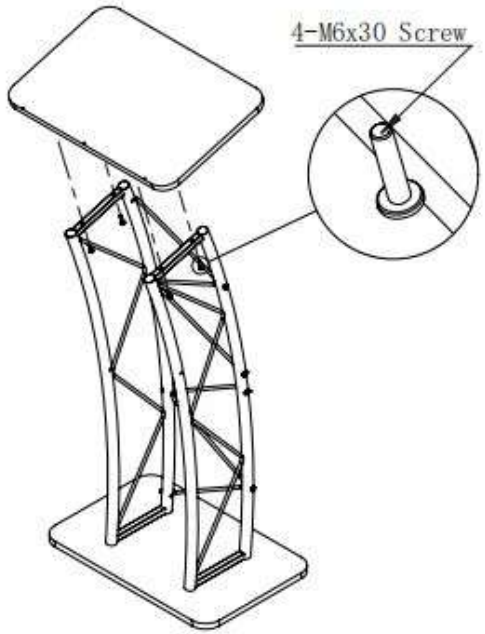



STEP4

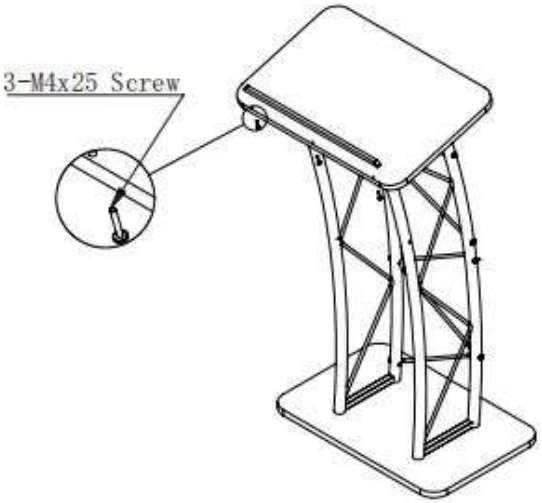

STEP5

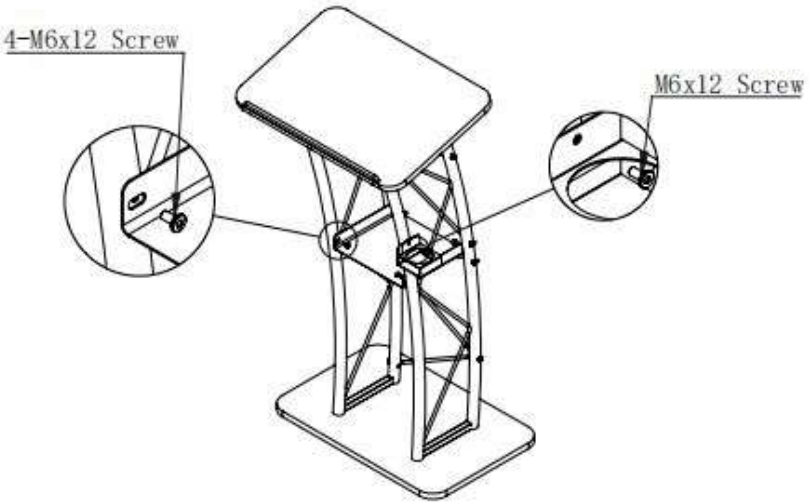

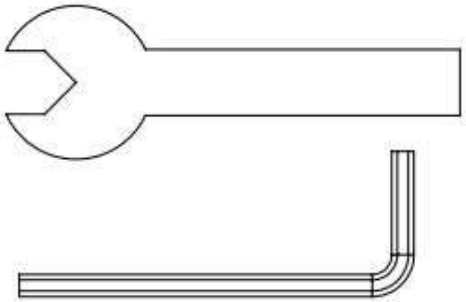

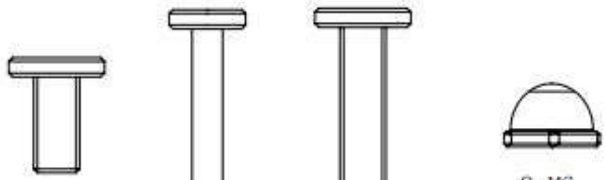

5-M6x12

3-M4x25

8-M6x30

8-M6