# Assembly Instructions

## Poly Plastic Adirondack Chair with Pull-out Ottoman

CAUTION : This Adirondack is NOT a TOY.
Keep your child / children at bay during the assembly process.
For moving the Adirondack and to prevent damages, two adults are needed to execute this action.
Please keep this instruction manual for future reference.

## Care Maintenace

- Please keep away from extreme heat and strong oxidizing agents.
- Do not clean chair with harsh cleansers or polish.
- Children should not climb or jump on the chair.
- Stains may be removed with mild soap solution and damp cloth.
- To obtain the longest lifespan of your outdoor products, avoid extended and lengthy exposure to rain, snow, and direct sunshine. When possible cover the product or place under the patio or awnings.

# Pre-Assembly

TOOLS REQUIRED (not included)

Phillips screwdriver

## Part list

| Label | Description | | Qty |
|---|---|---|---|
| A | | Seat panel | 1 pc |
| B | | Front left leg | 1 pc |
| C | | Front right leg | 1 pc |
| D | | Left armrest | 1 pc |
| E | | Right armrest | 1 pc |
| F | | Backrest | 1 pc |
| G | | Front leg Cross Beam | 1 pc |
| H | | Rear Seat Slat | 1 pc |
| I | | Gliders | 2 pcs |
| J | | Back leg Cross Beam | 1 pc |
| K | | This is preassembled in advance for your order | |
| *K1 | | Ottoman | 1 pc |
| *K2 | | Ottoman Cross Beam | 1 pc |
| L | | Slat | 2 pcs |
| M | | Back Slat | 2 pcs |

| Label | Description | | Qty |
|---|---|---|---|
| ① | | Screw M4*35MM | 14 pcs |
| ② | | Bolt M6*50MM | 8 pcs |
| ③ | | Bolt M6*55MM | 4 pcs |
| ④ | | Bolt M8*57MM | 2 pcs |
| ⑤ | | Bolt M8*77MM | 2 pcs |
| ⑥ | | Washer M6 | 6 pcs |
| ⑦ | | Washer M8 | 4 pcs |
| ⑧ | | Self-locking nut M8 | 4 pcs |
| ⑨ | | Self-locking nut M6 | 6 pcs |
| ⑩ | | Safety lock | 1 pc |
| ⑪ | | Spanner | 1 pc |
| ⑫ | | Wrench | 1 pc |

- Read instructions, cover to cover-
- Have 2 adults on hand for assembly-
- Do not assemble on flooring or carpet-
- Assemble on a clean non-marring surface (packing foam)-
- Save all packaging until finished-

**Before assembling, please check if you have all the parts in the assembly instructions.**

# Assembly Steps

## OVERVIEW

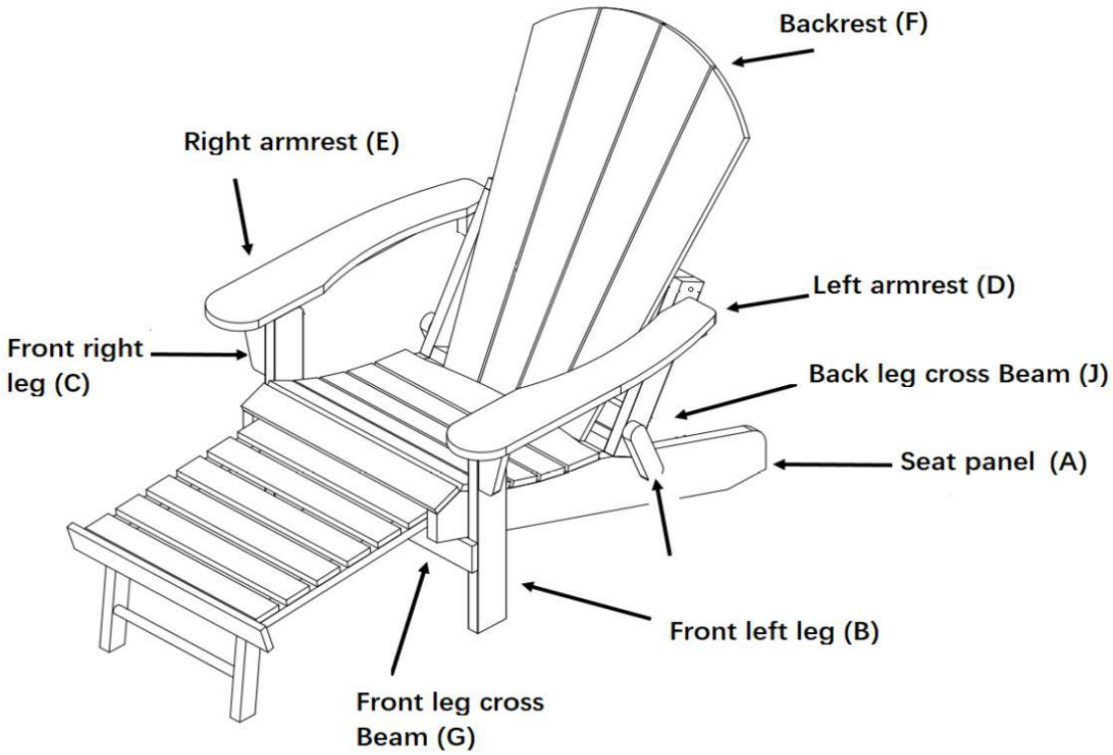


This Adirondack has multiple parts and may require up to 60 minutes to assemble. To give you an overview of the Adirondack parts, above picture is to help you put the various parts into perspective. Please read through the instructions below to familiarize yourself with the parts and steps before assembly.

## Step 1

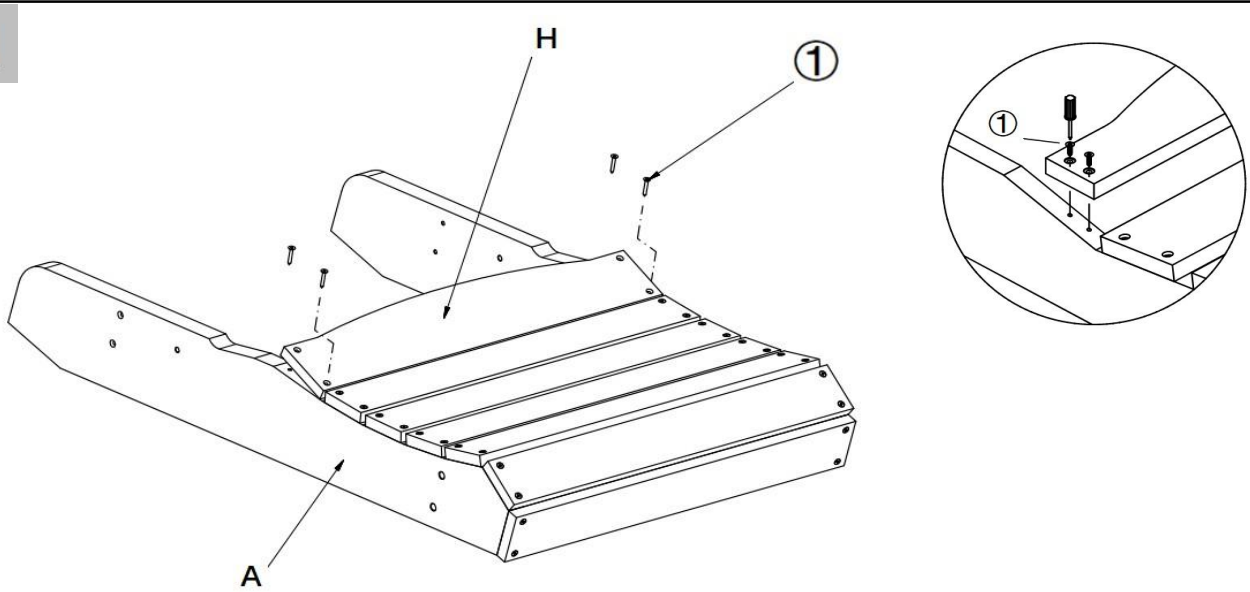


Place the Seat Panel(A) onto a clean, non-marring surface.
Position Rear seat slat(H) onto the Seat Panel(A) and attach using 4 screws(①) and phillips screwdriver.

## Step 2

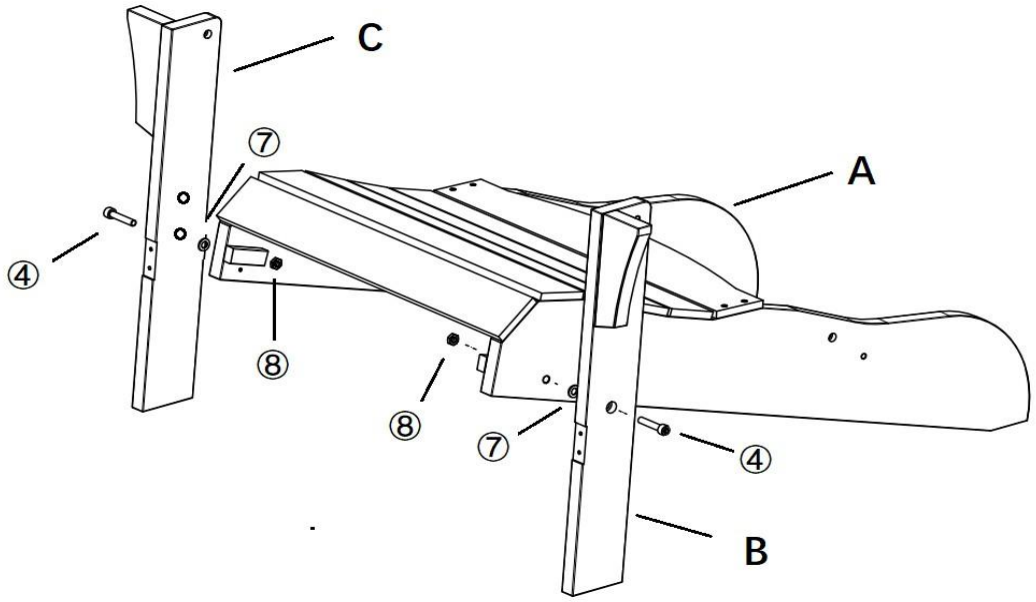


Attach the Front left Leg(B) and Front right leg(C)to Seat Panel (A) using Bolts(④), Washers(⑦ ), and Self-locking nuts (⑧) with Spanner(⑪) and Wrench(⑫)
Note: The Washer should be placed between the Seat Panel and Front Leg.

## Step 3

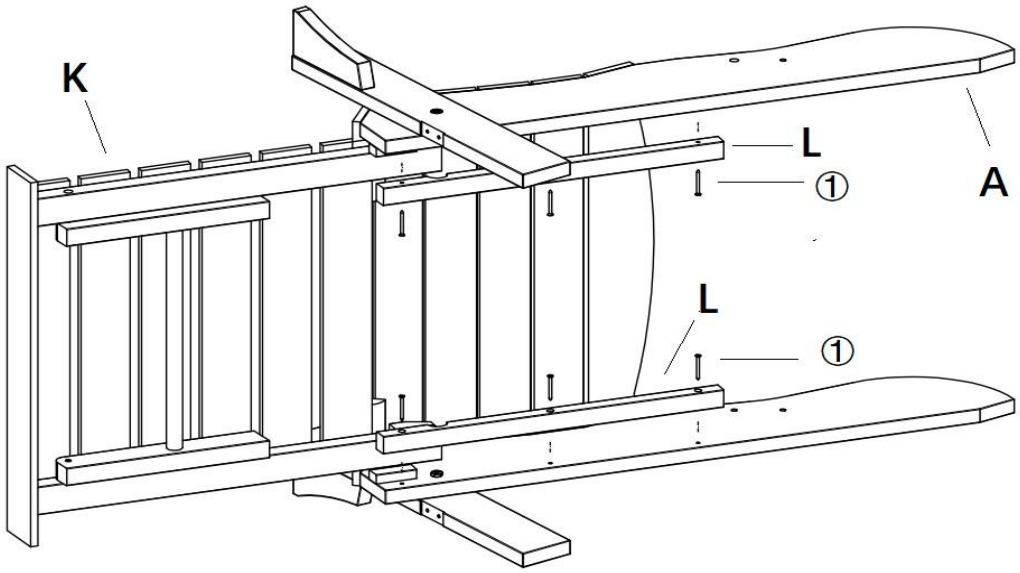


Attach the Ottoman (K) and slat (L) to the Seat Panel(A) as picture, with screws (①) and using the Phillips screwdriver.

## Step 4

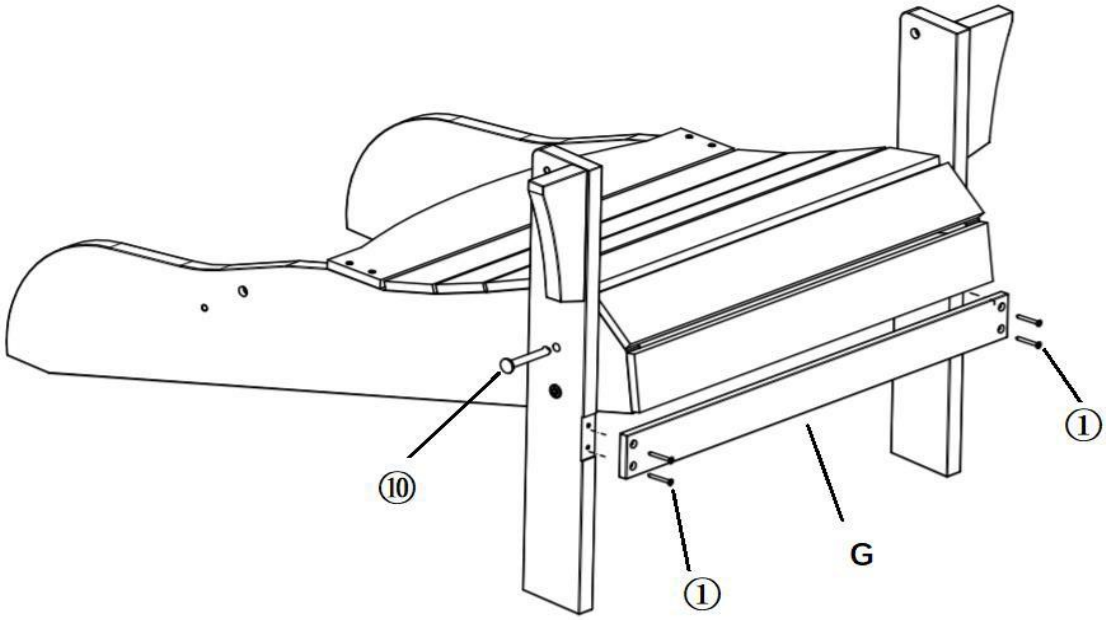


First，insert the Safety lock(⑩) into Front leg as pictured， attach the Front cross beam (G) to the front legs as picture with screws (①) and using the Phillips screwdriver.

## Step 5

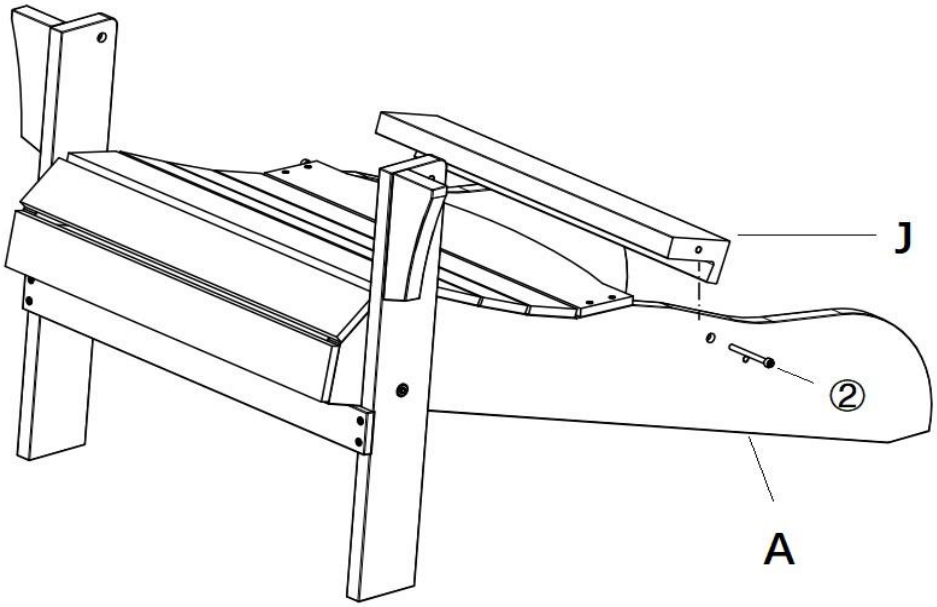


Attach the Back cross beam (J) to the Seat panel (A) as picture with screws (②) and using the Spanner (⑪).

## Step 6

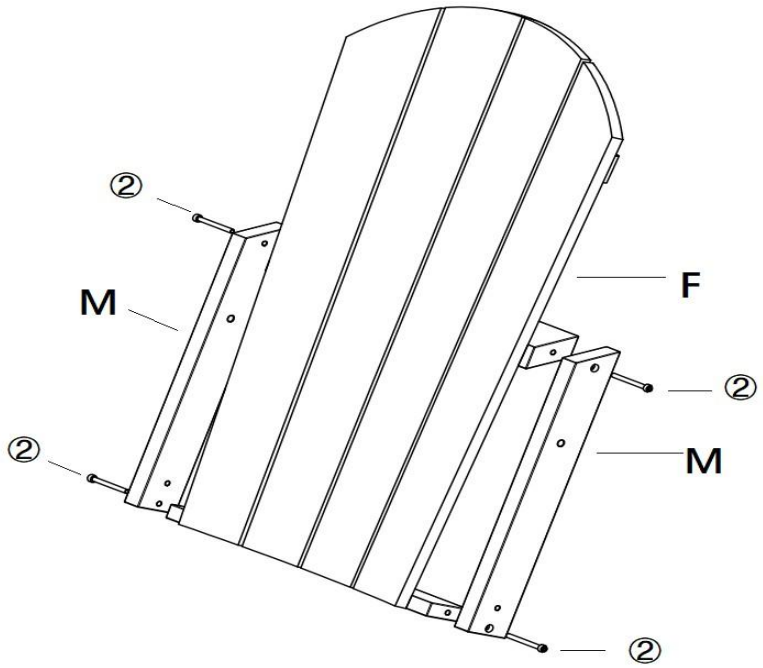


Attach the Back slats (M) to the Backrest (F) as picture with screws (②) and using the Spanner (⑪).

## Step 7

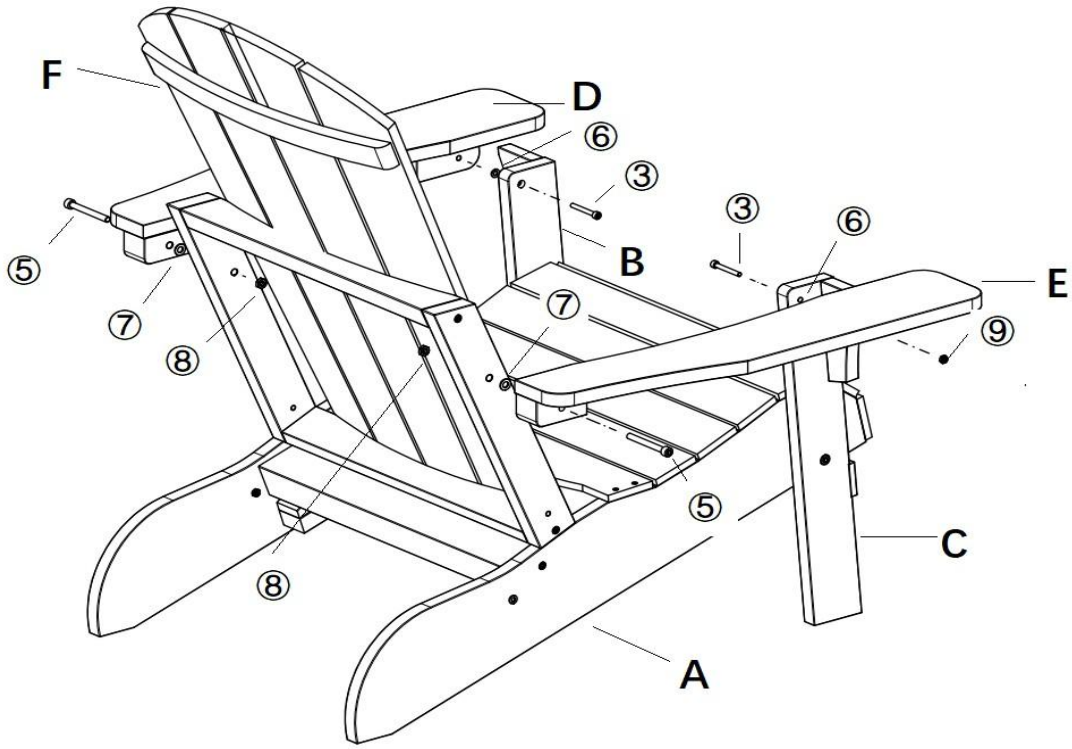


Attach the Armrest (D & E) to the Front Legs (B & C) using Bolts (③),Washers(⑥) and Self locking nuts (⑨) with Spanner (⑪) and Wrench(⑫).
Attach the Armrest (D & E) to the Backrest (F) using Bolts(⑤), Washers(⑦ ), and Self- locking nuts (⑧) with Spanner(⑪) and Wrench(⑫).
**Note: The Washer should be placed between the Armrest and Front Leg or Backrest.**

## Step 8

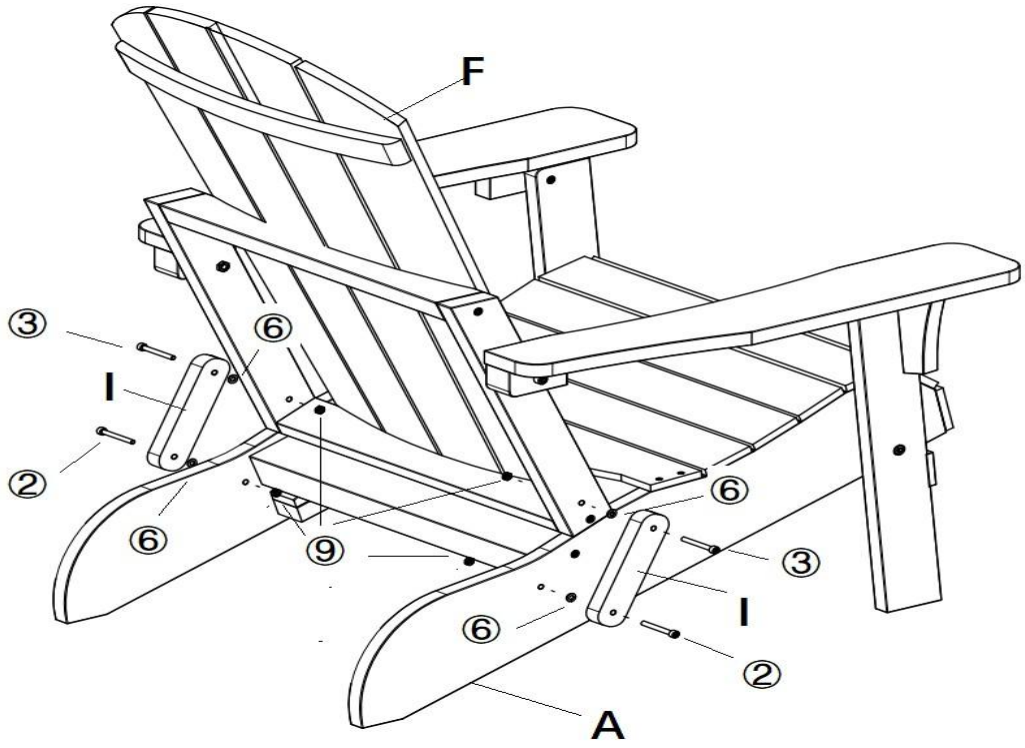


Attach the Backrest(F) to the Gliders(I) using Bolts(②) and Bolts(③) ,Washers(⑥) and Self locking nut(⑨) with Spanner(⑪) and Wrench(⑫).

**Note: The Washer should be placed between the Backrest and Glider.**

## Step 9

Your Adirondack chair is ready for use.

# Important Note:

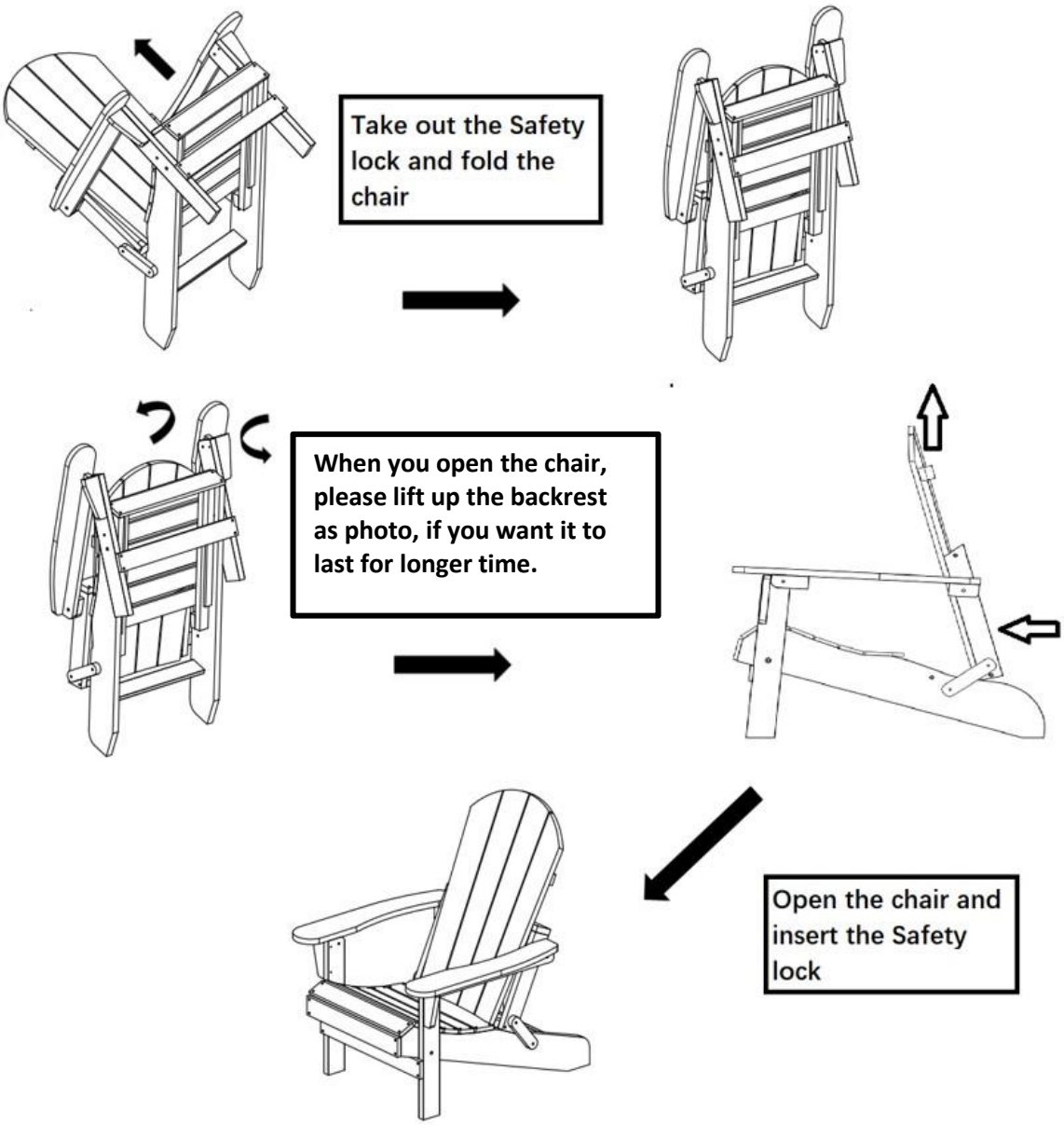


This Adirondack can be folded shut.

**To fold** this Adirondack,please take out the safety lock first, then raise up Backrest and fold Seat with Leg Frame as indicated by the arrows, by hand, until the Adirondack folds shut.

**To open** this Adirondack, open Backrest and Seat as indicated by the arrows, by hand until the Adirondack folds out and locks into position, then insert the the safety lock as Step 6.

**Note:** This Adirondack is slightly heavy, do exercise caution to avoid injury.