210x143mm

# Assembly Instructions

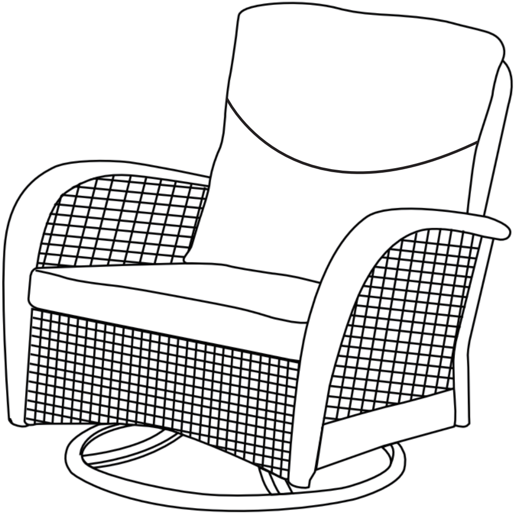

*Don't fully tighten all the bolts till the very end!

PRE-ASSEMBLY PREPARATION:
--- Please read through the instructions before beginning assembly.
--- Clear out the space for assembly and lay out all of the parts based on the Parts List, extra room will allow you to easily determine if all the pieces are present.
--- Keep small parts and pieces away from children until fully assembled.

Customer Support
For immediate assistance with shipping damages, missing components, or packaging issues, please contact our support team within 48 hours of delivery.
Email: HYDservice03@outlook.com
Service Hours: Mon - Fri

| Part no. | Part | QTY | Image | Part no. | Part | QTY | Image |
|---|---|---|---|---|---|---|---|
| **A1** | Left Arm | 1 | 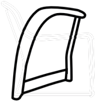 | **J** | Screws<br>M6*40mm | 8 | 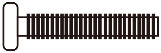 |
| **A2** | Right Arm | 1 | 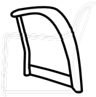 | **K** | Screws<br>M6*35mm | 18 | 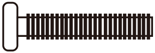 |
| **B** | Back | 1 | 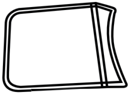 | **L** | Screws<br>M6*16 mm | 8 | 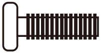 |
| **C** | Front panel | 1 | 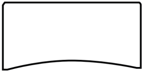 | **M** | Nuts | 14 | 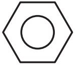 |
| **D** | Seat | 1 | 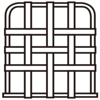 | **N** | Washers | 22 | 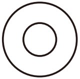 |

| | | | | | | | |
|---|---|---|---|---|---|---|---|
| **E** | Base | 1 | 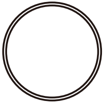 | **O** | Seat Cushion | 1 | 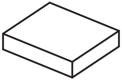 |
| **F** | Short support bar | 2 | 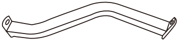 | **P** | Back Cushion | 1 | 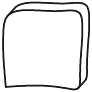 |
| **G** | Support bar | 1 | 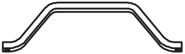 | **Q** | Allen Wrench | 1 | 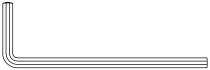 |
| **H** | Swivel plate | 1 | 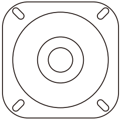 | **R** | Wrench | 1 | 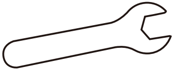 |
| **I** | U-shape fitting | 1 | 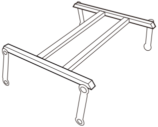 | | | | |

**Step 1:** Attach arms A1&A2 to back panel B with 4pcs bolts K and 4pcs washers N ,using Allen wrench Q .Note:Don't fully tighten the bolts.

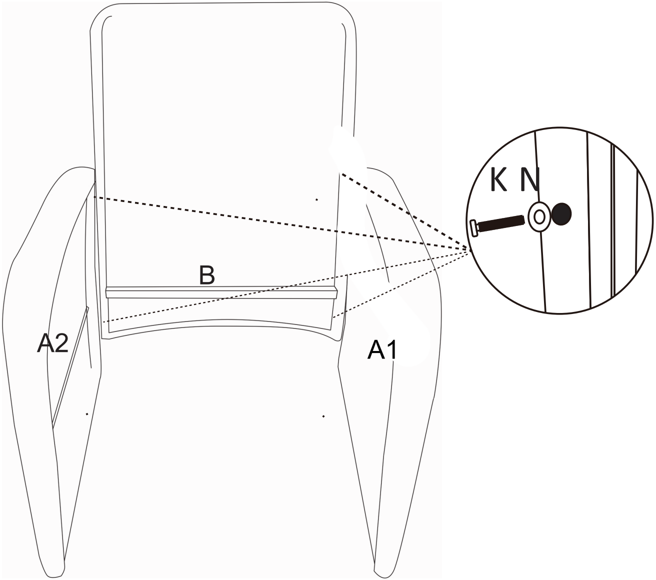

**Step 2:** Attach front panelC to arms A1&A2 with 4pcs K and 4pcs washer N , using Allen wrench Q .Note:Don't fully tighten the bolts .

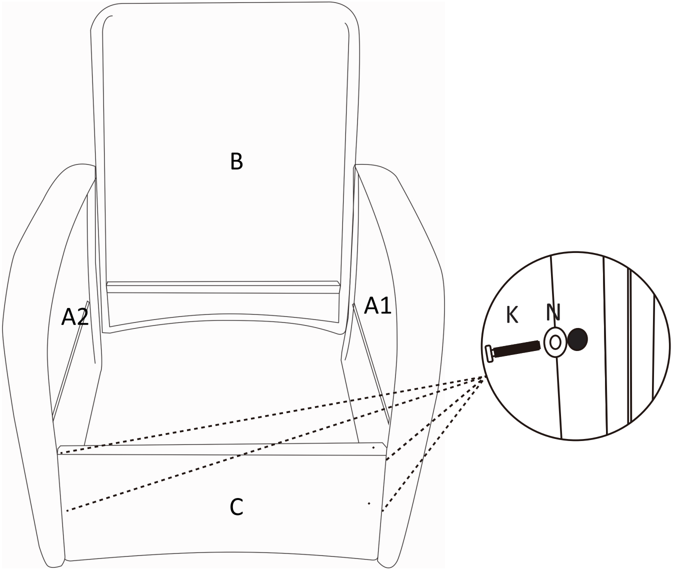

**Step 3 :** Attach seat panel D to back panel and front panel with 4pcs bolts J and 4pcs washers N ,using Allen wrench Q .Note:Don't fully tighten the bolts .

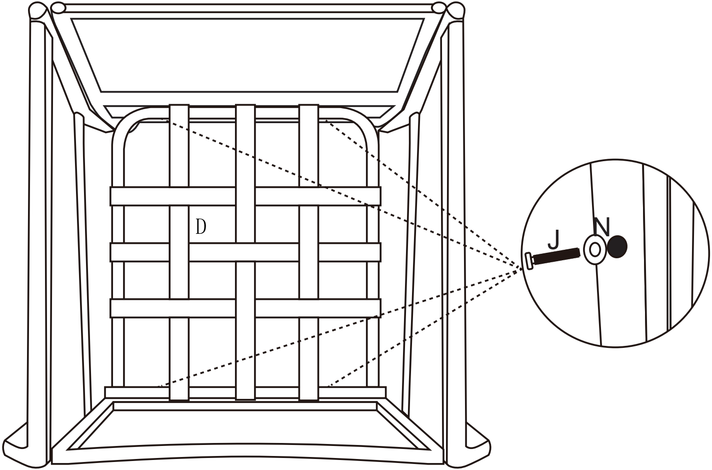

**Step 4:** Attach 2pcs short support bar F &support G with 2pcs bolts K ,2pcs washers N and 2pcs nuts M ,using Allen wrench Q and wrench R .Note:Don't fully tighten all the bolts.

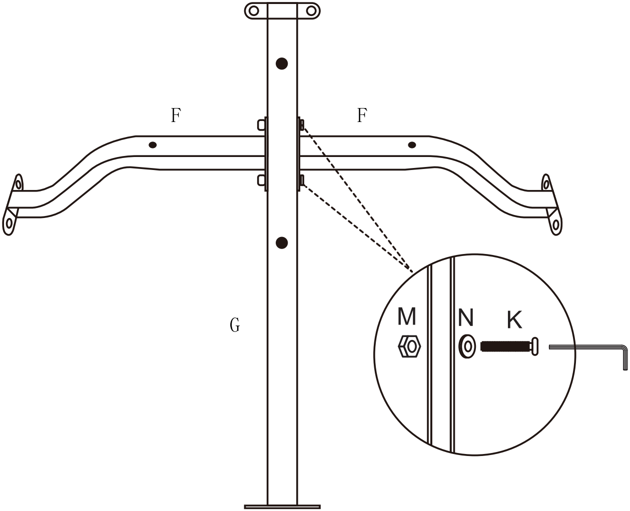

**Step 5:** Attach support bar to base E with 8pcs bolts L and 8pcs washers N,using Allen wrench Q .Note:Don't fully tighten the bolts .

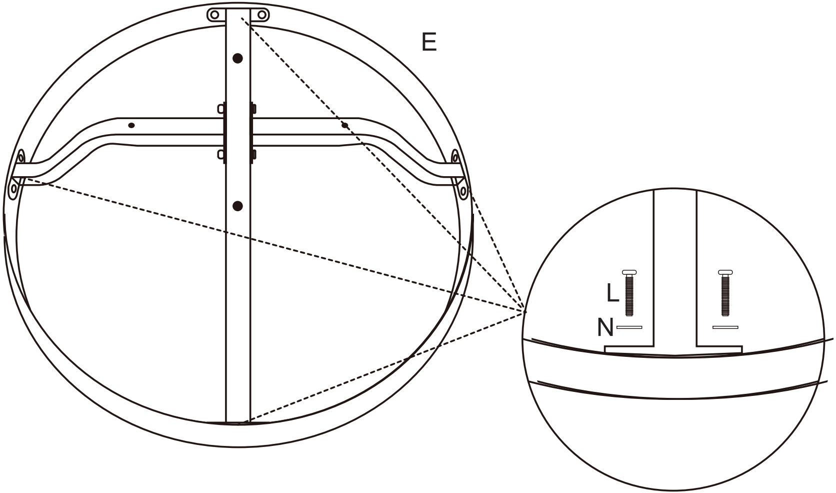

**Step 6:** Attach swivel plate H to support bar with 4pcs bolts K and 4pcs nuts M, using Allen wrench Q and wrench R .Note:Don't fully tighten all the bolts.

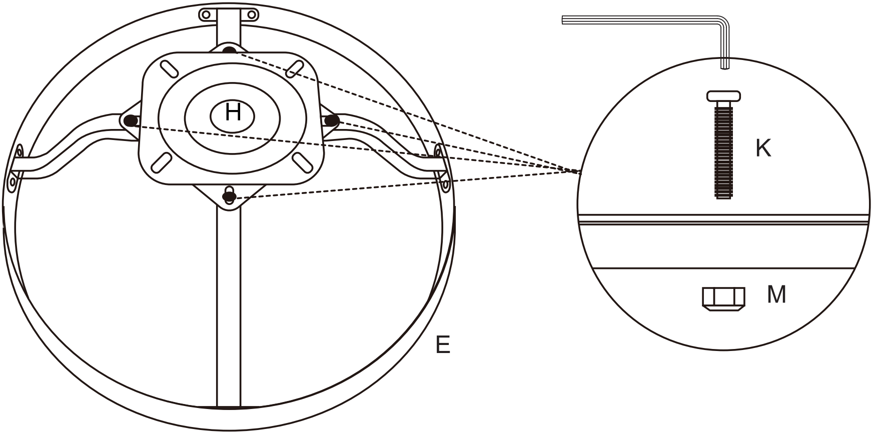

**Step 7:** Attach u-shape fitting I to swivel plate with 4pcs bolts Kand 4pcs nuts M ,using Allen wrench Q and wrench R .Note:Don't fully tighten all the bolts.

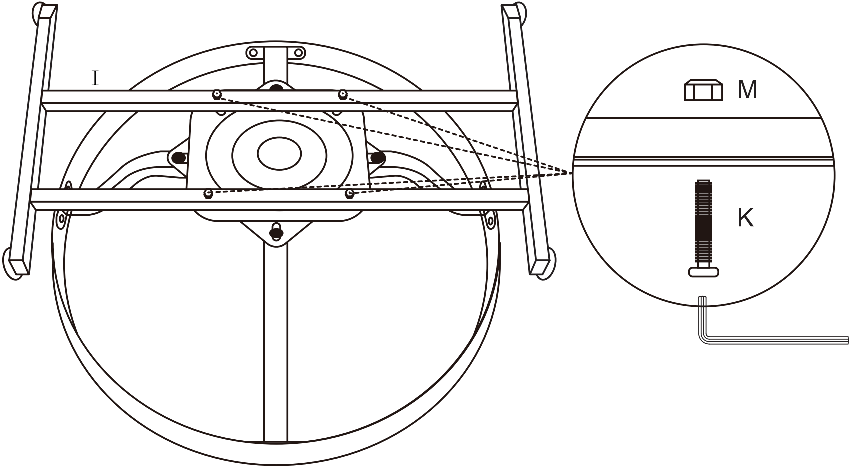

**Step 8:** Attach swing arm to Arms A1&A2 with 4pcs bolts J and 4pcs nuts M,using Allen wrench Q and wrench R .Note:Please fully tighten all the bolts.

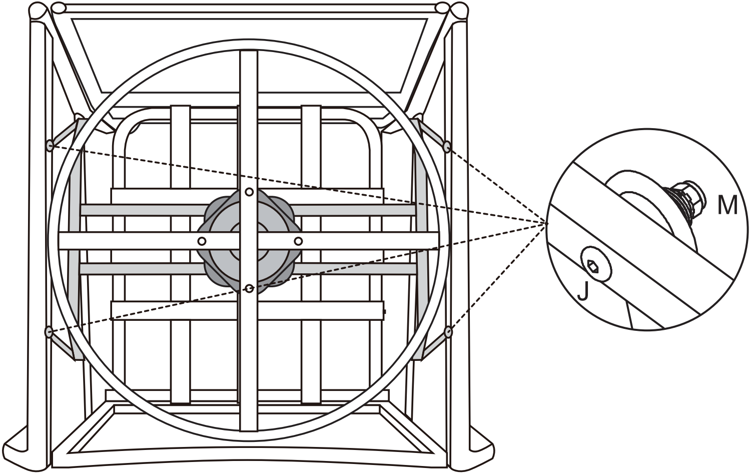

**Step 9:** Put the seat cushion O and back cushion P onto the seat .Assembly is now complete and the product is ready for use.

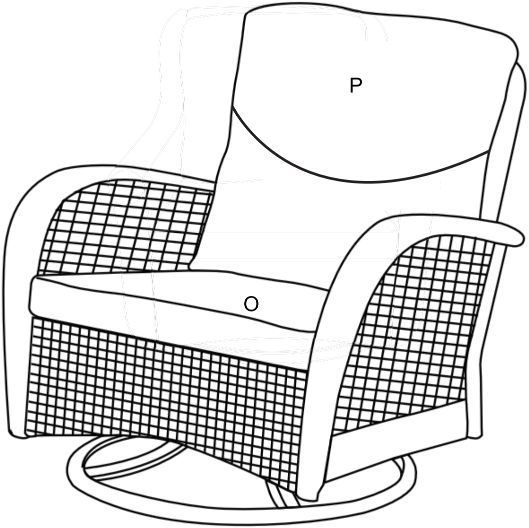

# Assembly Instructions

**Parts List(END TABLE):**

| NO. | part | Diagram | Qty pcs |
|---|---|---|---|
| A | Table Top | 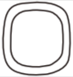 | 1 |
| B | Table Leg | 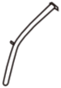 | 4 |
| C | Table Shelf | 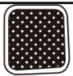 | 1 |
| D | Screws | 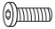 | 12 |
| E | Washers | | 12 |
| F | Hex Wrench | 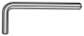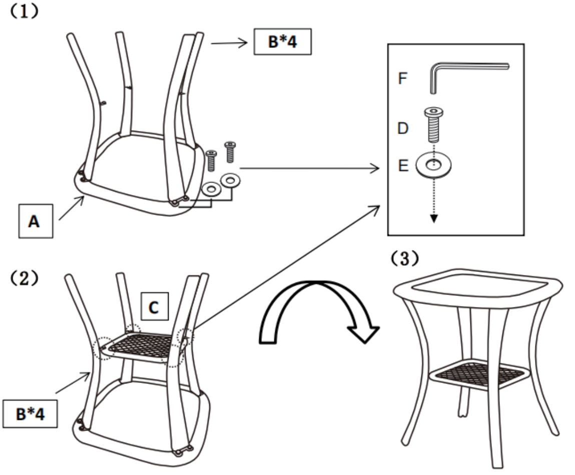 | 1 |