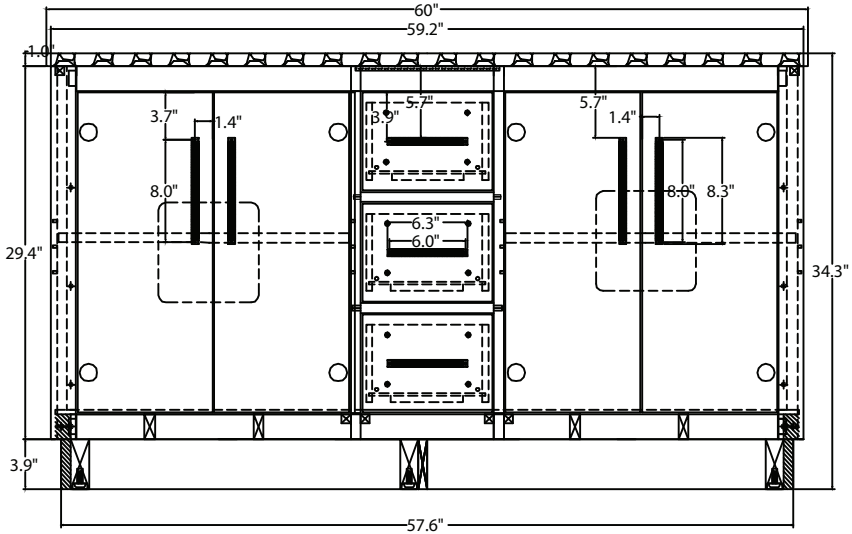
60"
59.2"
1.0"
3.7"
1.4"
5.7"
3.9"
5.7"
1.4"
8.0"
8.9"
8.3"
6.3"
6.0"
29.4"
34.3"
3.9"
57.6"

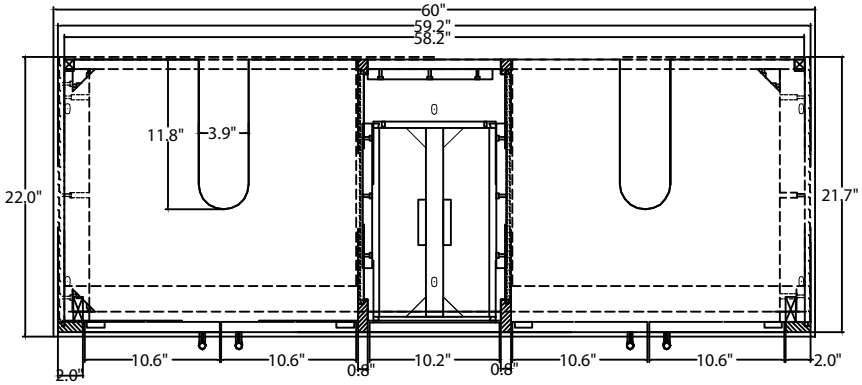
60"
59.2"
58.2"
11.8"
3.9"
22.0"
21.7"
2.0"
10.6"
10.6"
0.8"
10.2"
0.8"
10.6"
10.6"
2.0"

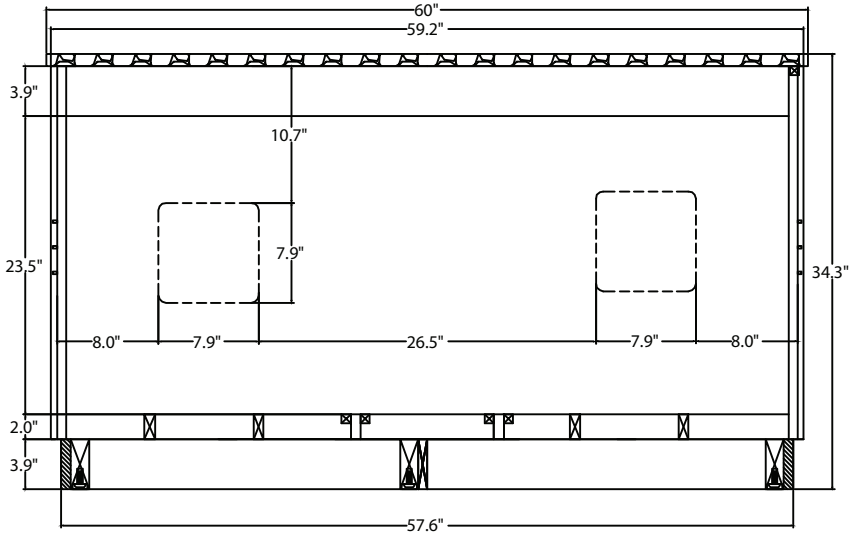
60"
59.2"
3.9"
10.7"
23.5"
7.9"
34.3"
8.0"
7.9"
26.5"
7.9"
8.0"
2.0"
3.9"
57.6"

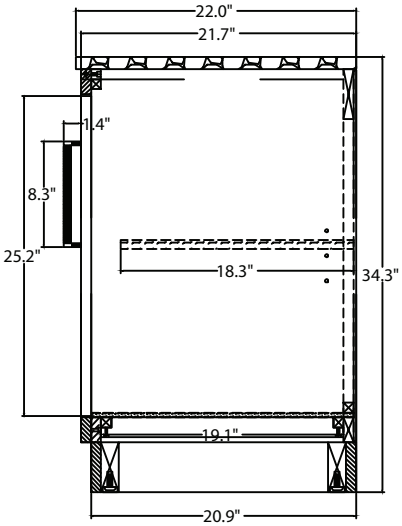
22.0"
21.7"
1.4"
8.3"
25.2"
18.3"
34.3"
19.1"
20.9"

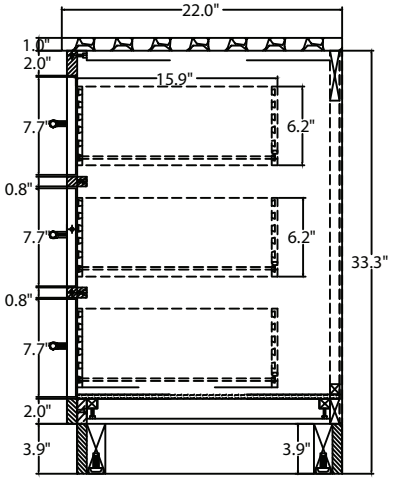
22.0"
1.0"
2.0"
15.9"
7.7"
6.2"
0.8"
7.7"
6.2"
33.3"
0.8"
7.7"
2.0"
3.9"
3.9"

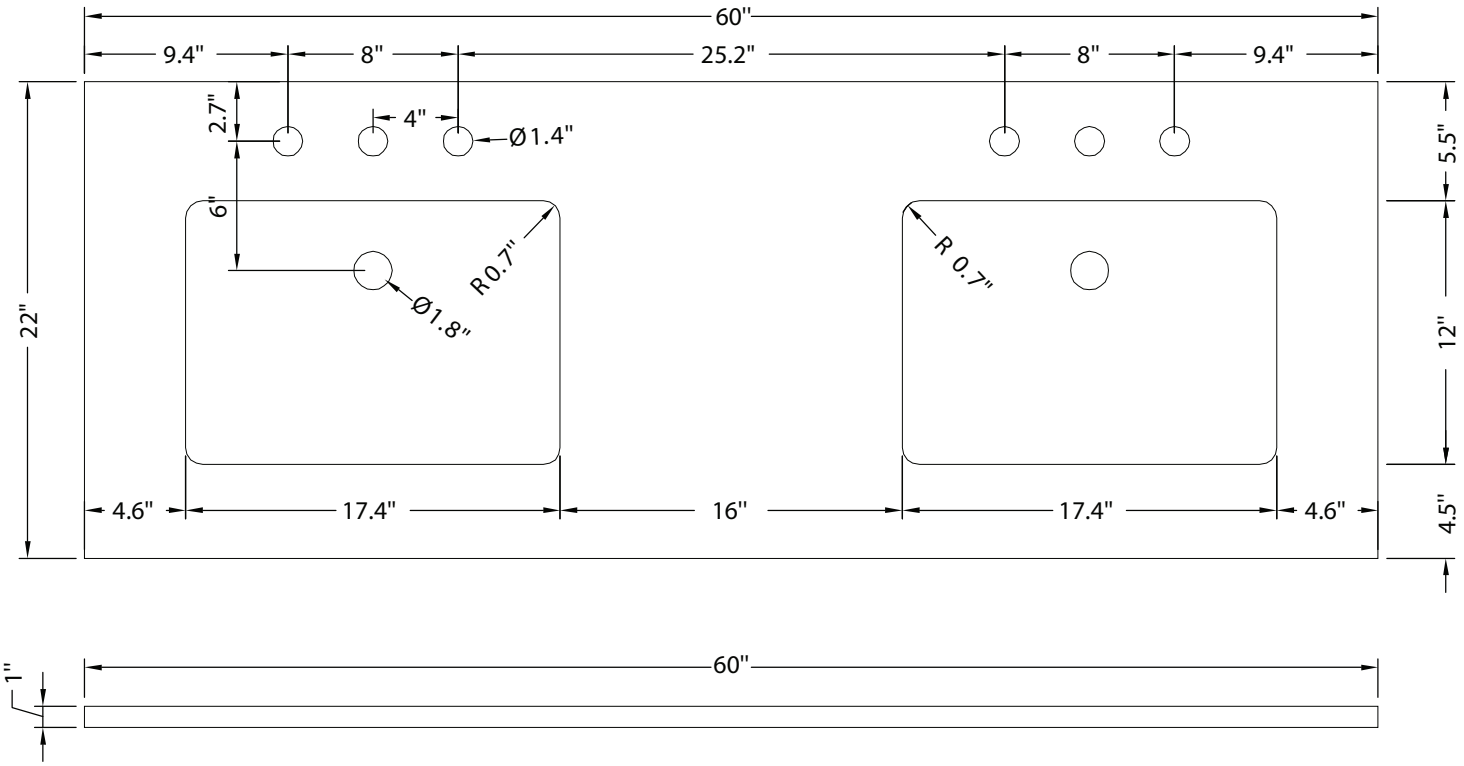
60"
9.4"
8"
25.2"
8"
9.4"
2.7"
4"
Ø1.4"
6"
R0.7"
Ø1.8"
R 0.7"
22"
5.5"
12"
4.5"
4.6"
17.4"
16"
17.4"
4.6"
60"
1"

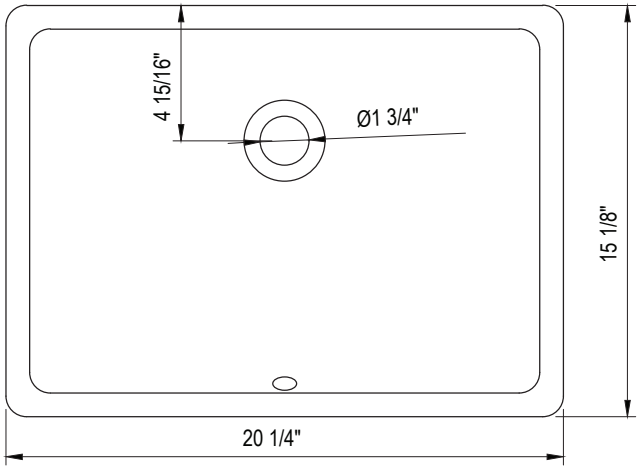
4 15/16"
Ø1 3/4"
15 1/8"
20 1/4"

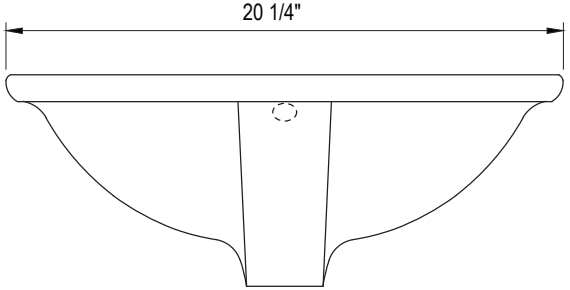
20 1/4"

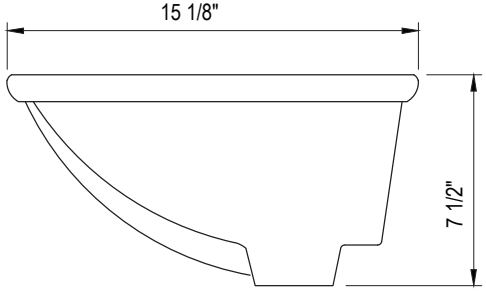
15 1/8"
7 1/2"

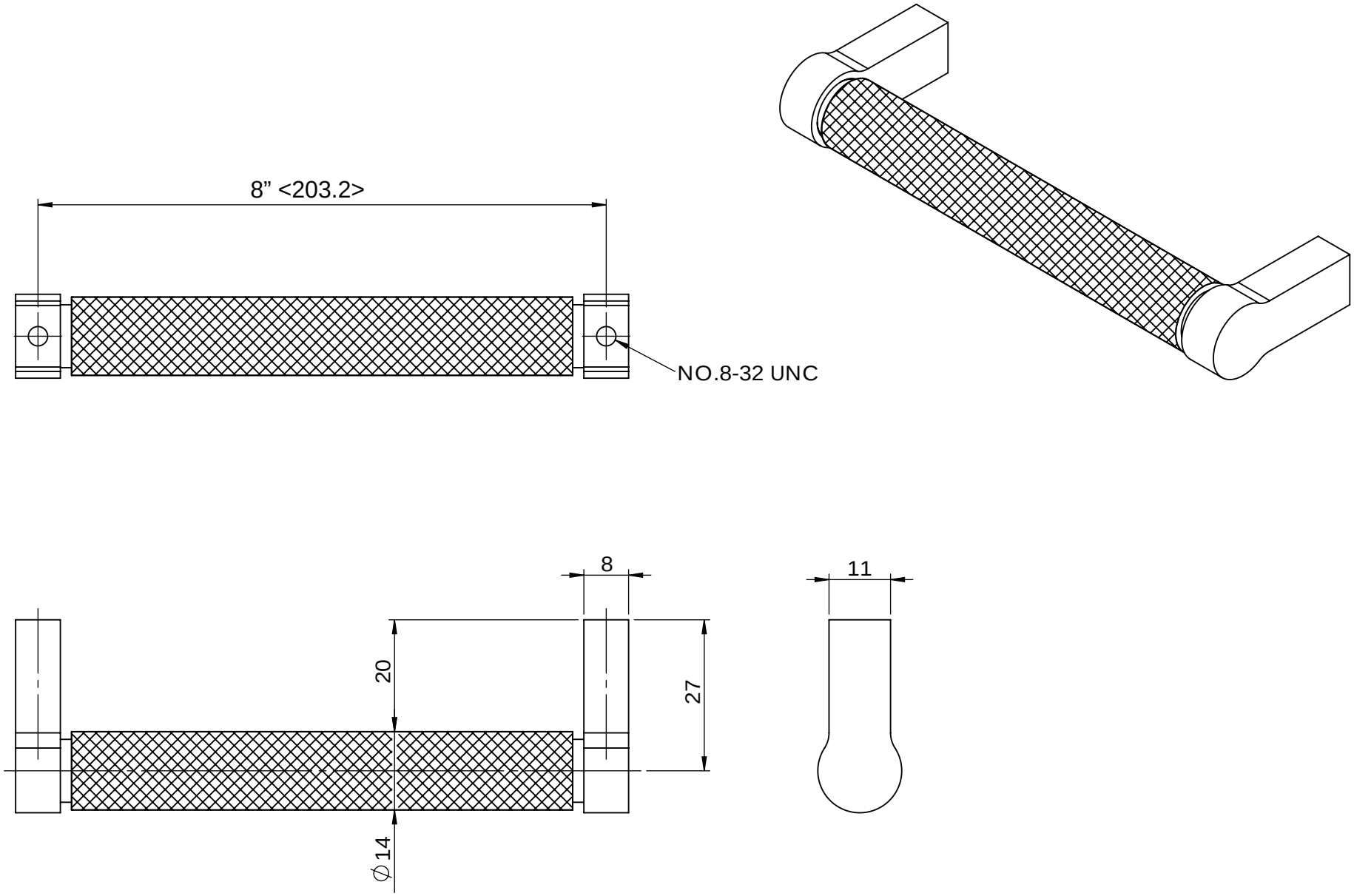
8” <203.2>
NO.8-32 UNC
8
11
20
27
Ø14

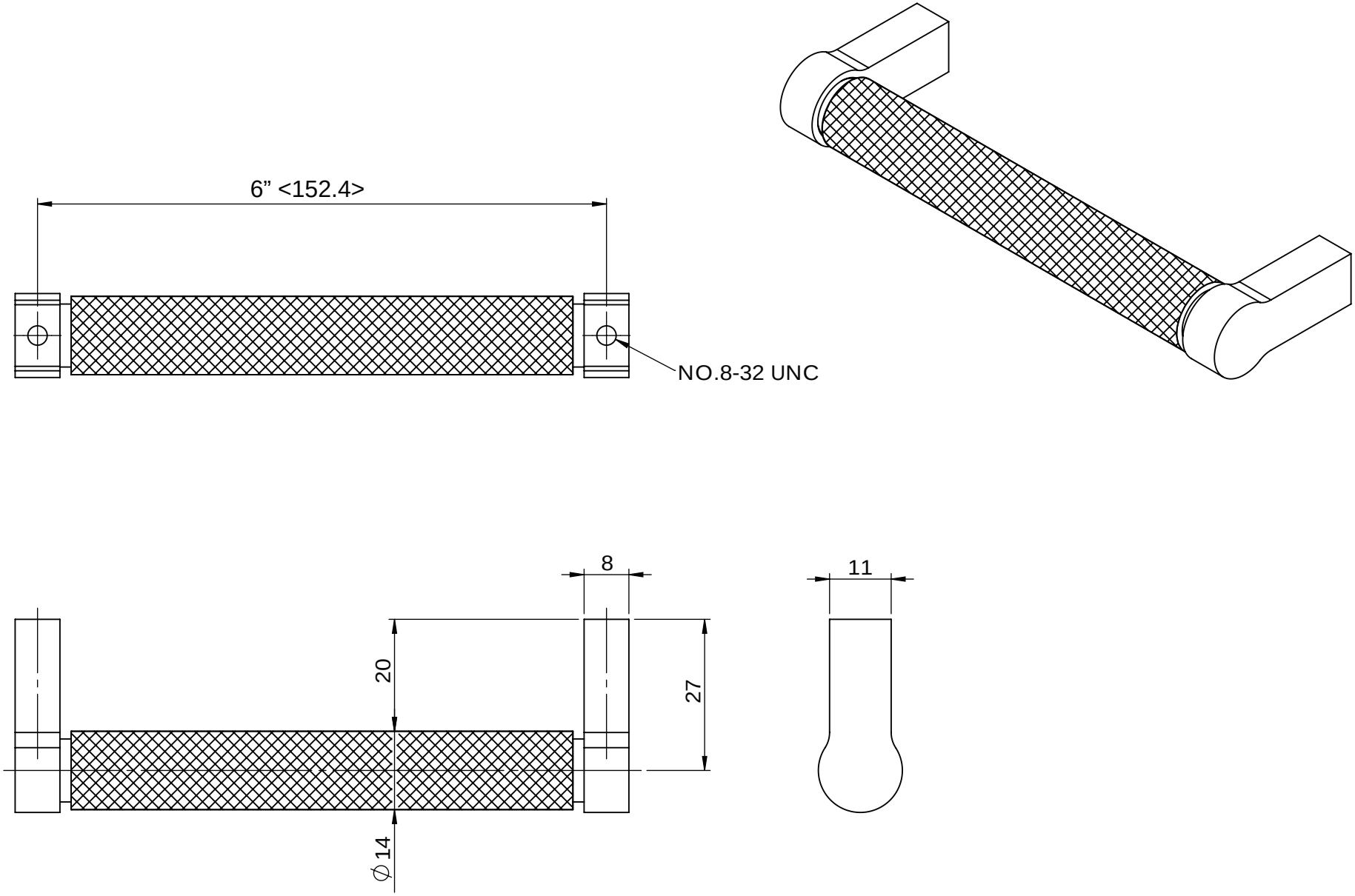
6” <152.4>
NO.8-32 UNC
8
11
20
27
∅14

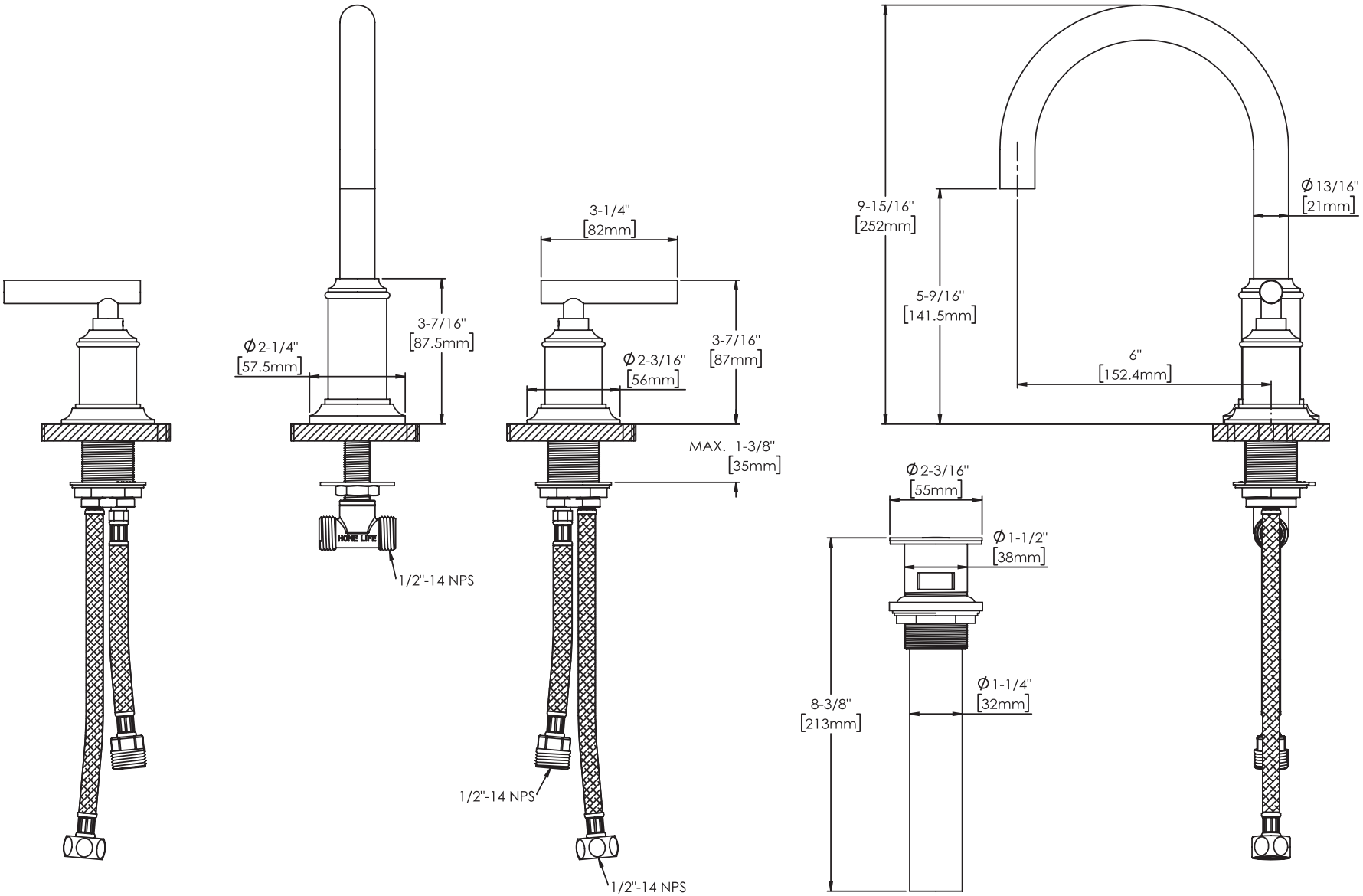
3-7/16"
[87.5mm]
Ø2-1/4"
[57.5mm]
HOME LIFE
1/2"-14 NPS
3-1/4"
[82mm]
3-7/16"
[87mm]
Ø2-3/16"
[56mm]
MAX. 1-3/8"
[35mm]
1/2"-14 NPS
1/2"-14 NPS
9-15/16"
[252mm]
5-9/16"
[141.5mm]
6"
[152.4mm]
Ø13/16"
[21mm]
Ø2-3/16"
[55mm]
Ø1-1/2"
[38mm]
Ø1-1/4"
[32mm]
8-3/8"
[213mm]

2024-12-19