SKU:SF001043

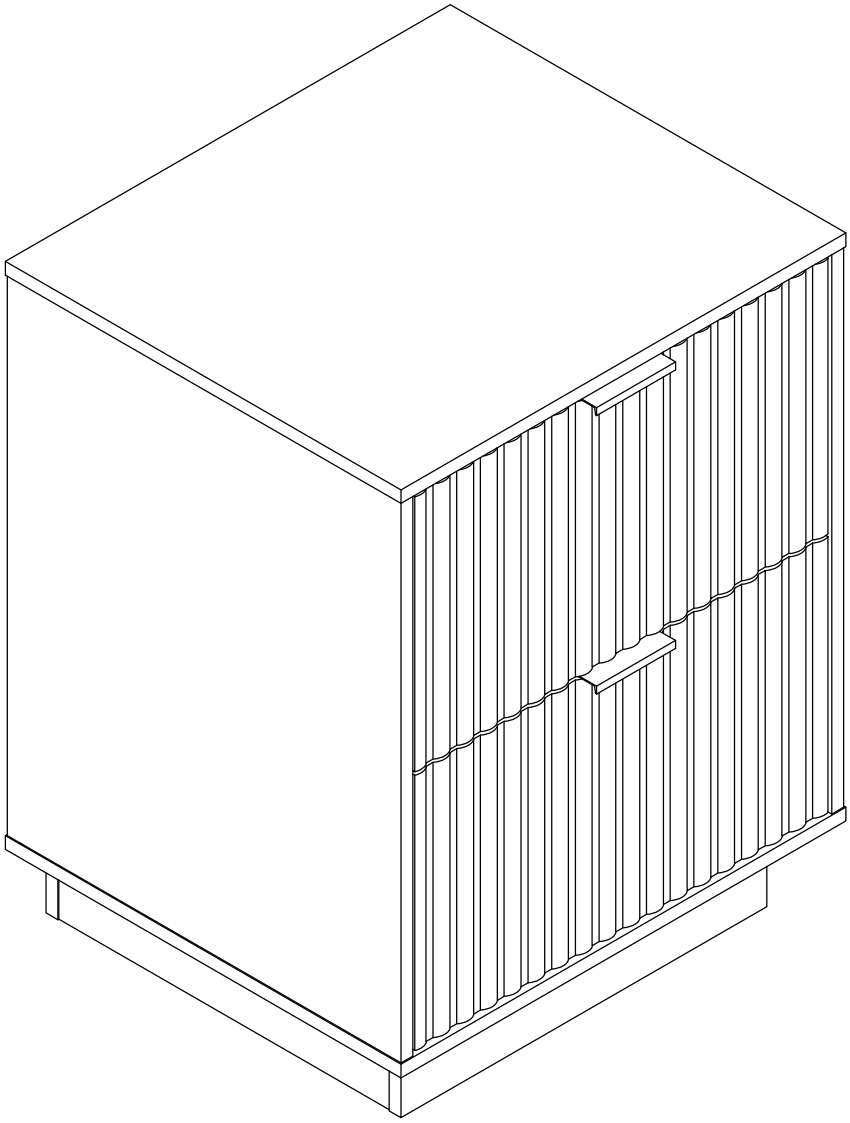

ASSEMBLY INSTRUCTIONS

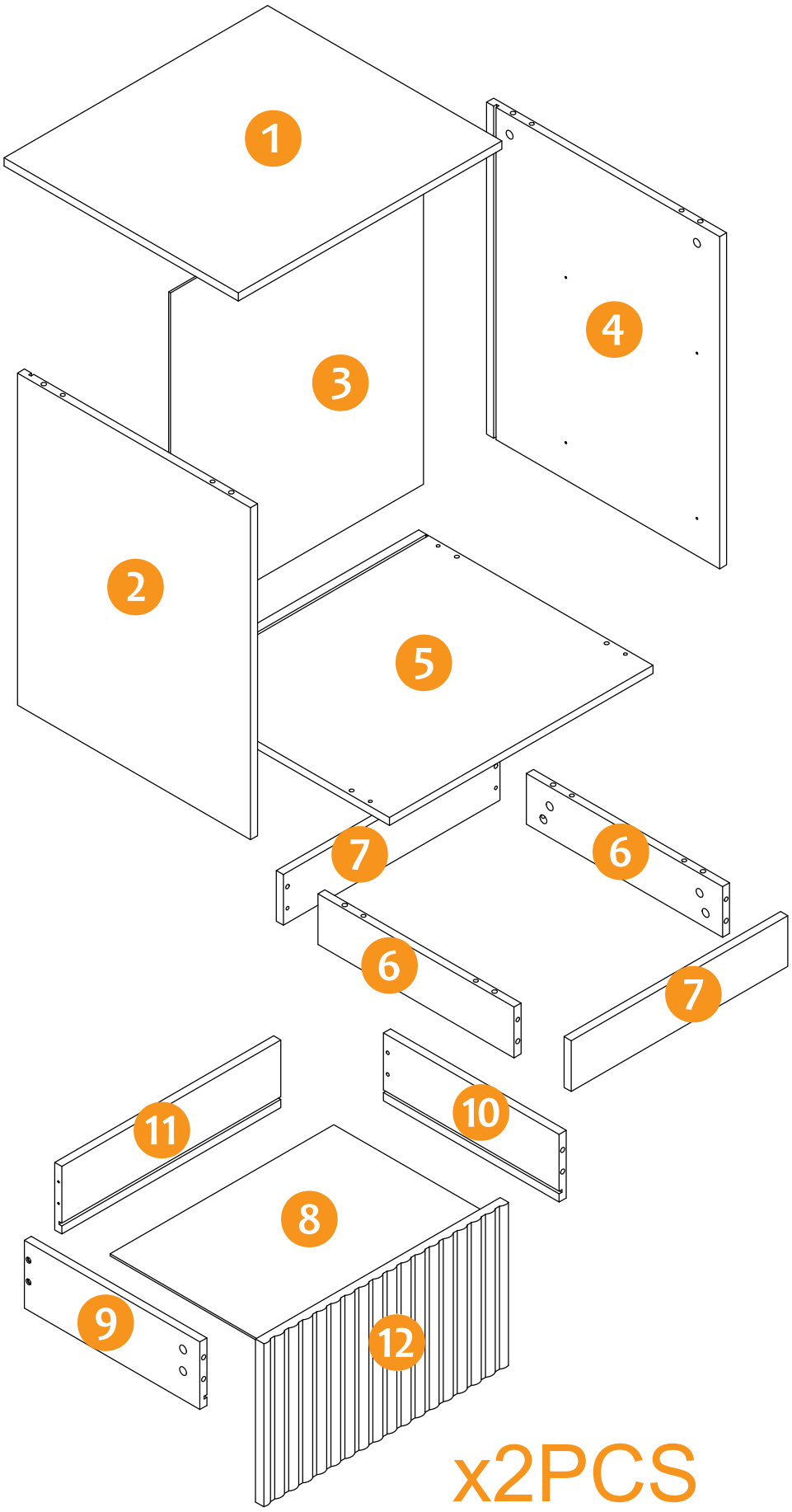

Trouble Shooting

Missing/Damaged pieces/
Wrong size and installation issues

↓

Contact us with your problem,pic, number and qty to the "Contact seller" button in the detail page of your order

↓

Respond with 24 hours to solve issue

Before You Start

1.Read through each step carefully and follow the proper order

2.Separate and count all your parts and hardware

3.Give yourself enough room for the assembly process

4.Caution: If using a power drill or power screwdriver for screwing, please be aware to slow down and stop when screw is tight. Failure to do so may result in stripping the screw

Cam Lock Fastening System

This Cam Lock Fastening System willl be used throughout theassembly process

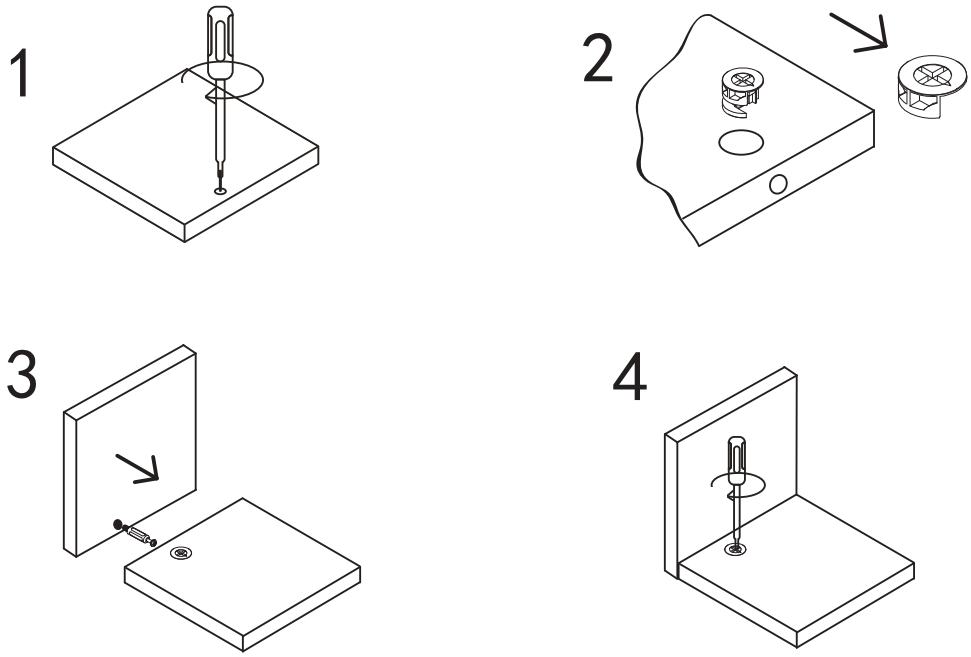

Parts List

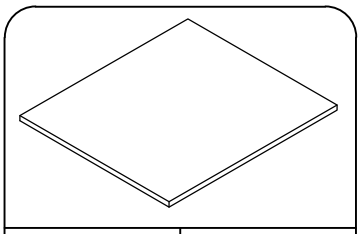

1	1PC

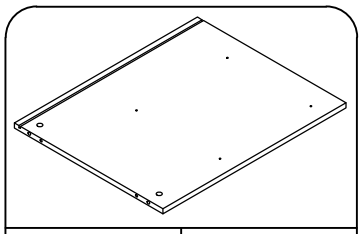

2	1PC

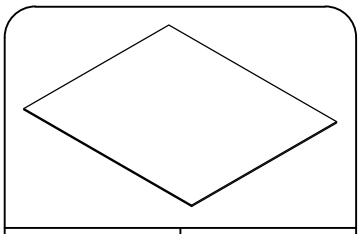

3	1PC

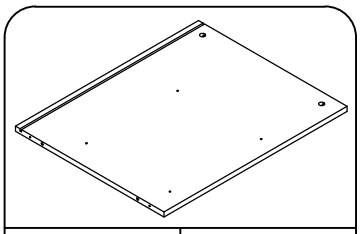

4	1PC

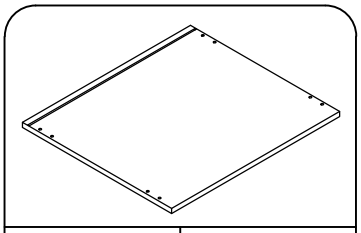

5	1PC

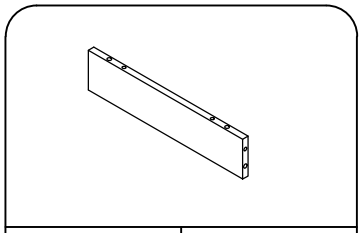

6	2PCS

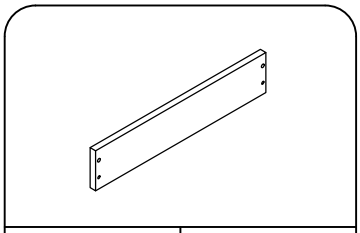

7	2PCS

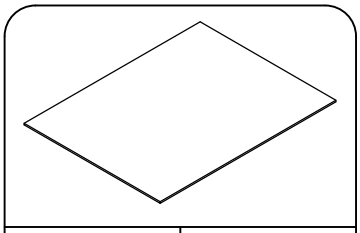

8	2PCS

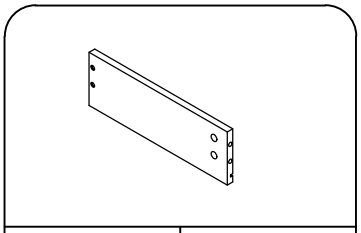

9	2PCS

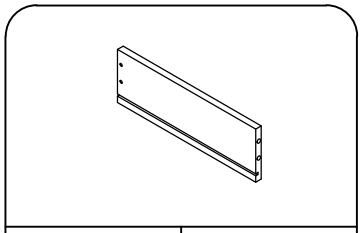

10	2PCS

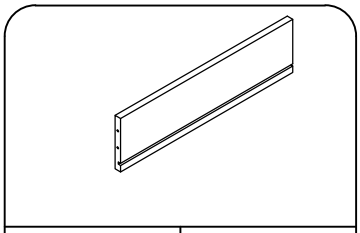

11	2PCS

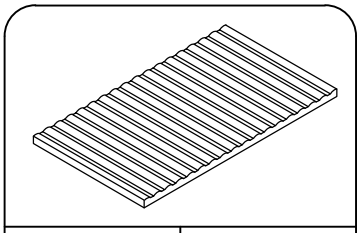

12	2PCS

Hardware List

A	20PCS

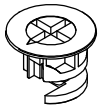

ϕ12

B	20PCS

Ø6*30mm

C	16PCS

Ø4*40mm

D	12PCS

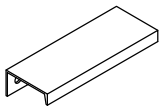

E	2PCS

ϕ3*12mm

F	20PCS

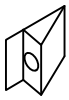

G	4PCS

ϕ3*14mm

H	4PCS

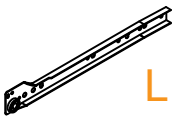

L

I	2PCS

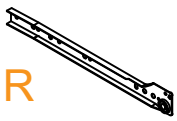

R

J	2PCS

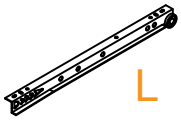

L

K	2PCS

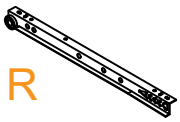

R

L	2PCS

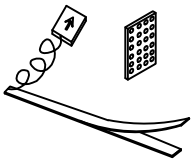

M	1PC

STEP 1

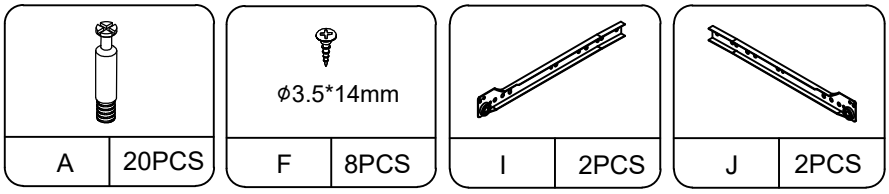

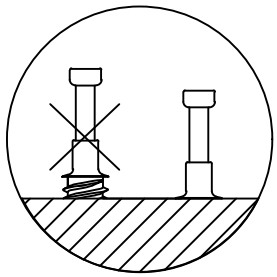

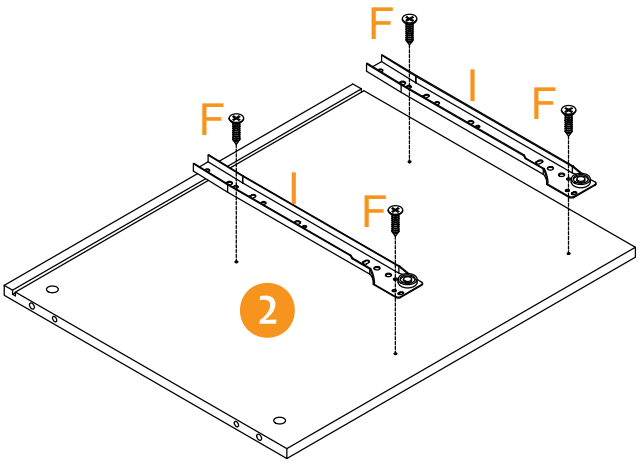

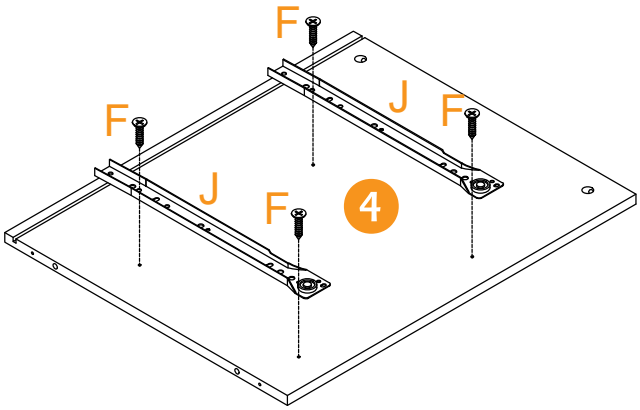

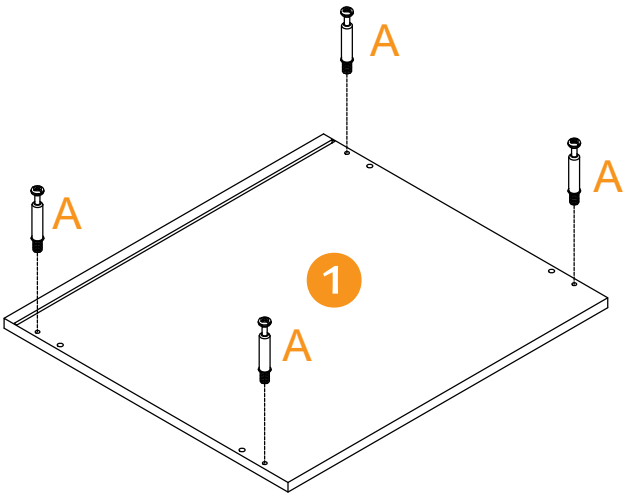

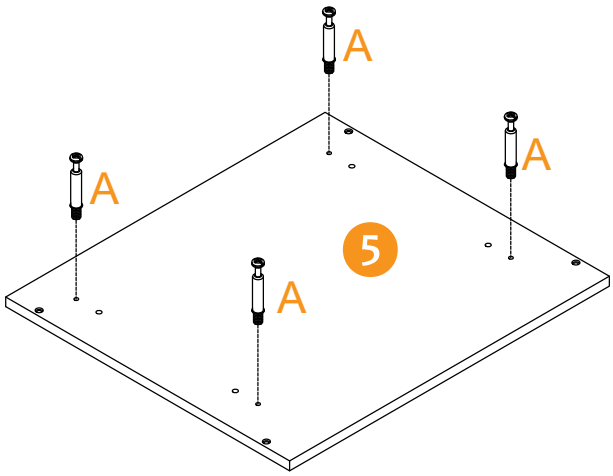

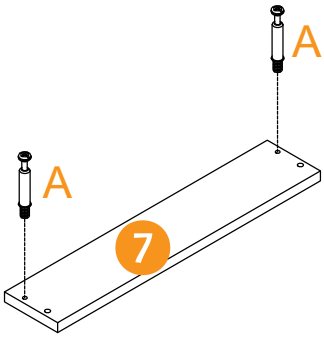

x2PCS

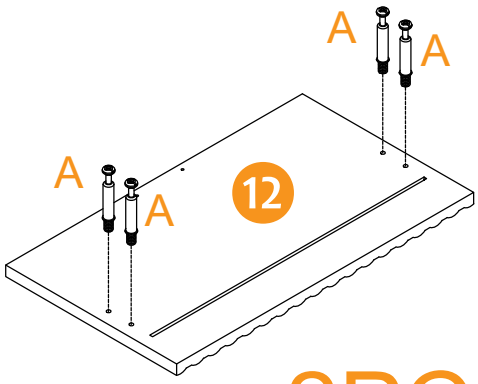

x2PCS

STEP 2

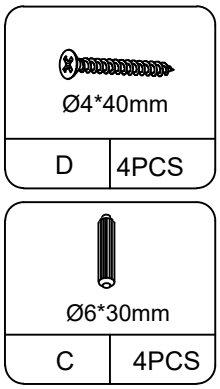

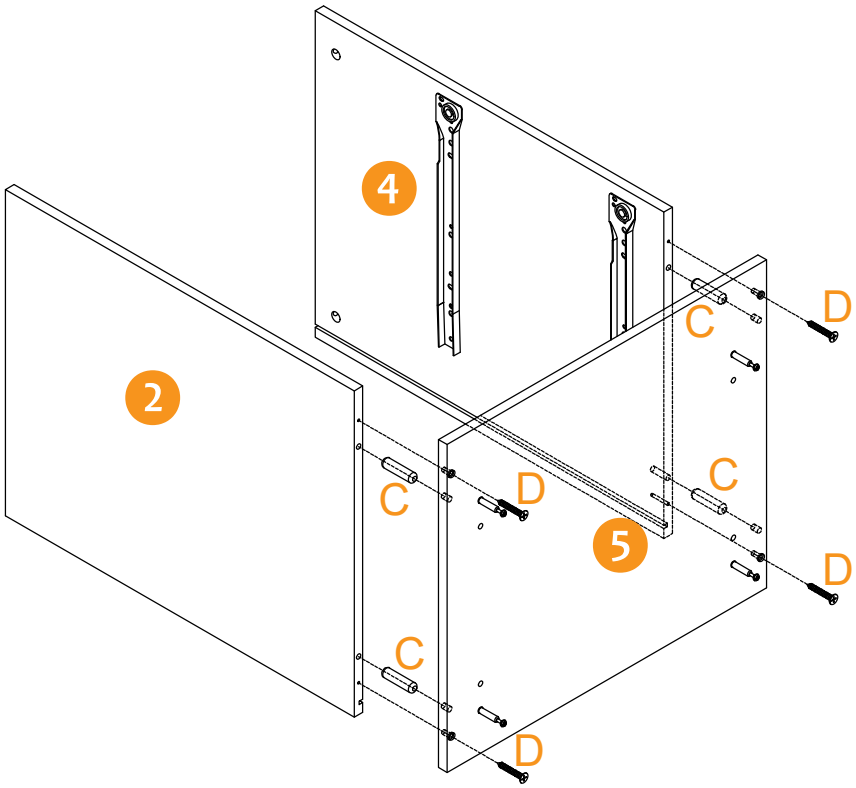

STEP 3

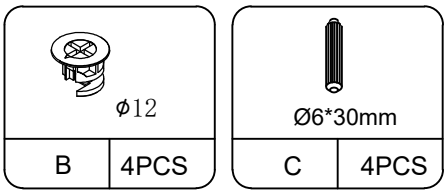

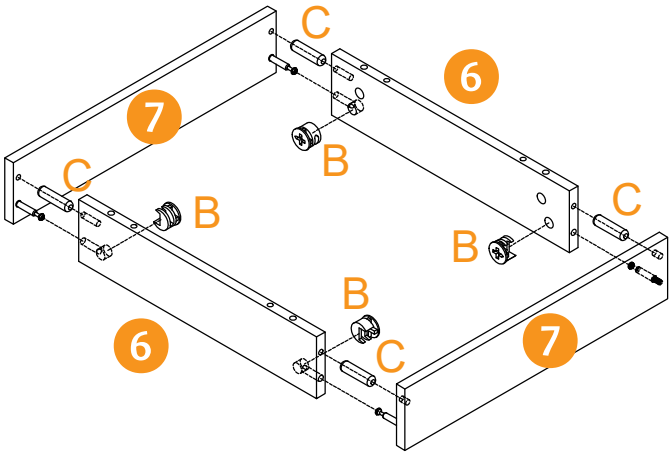

STEP 4

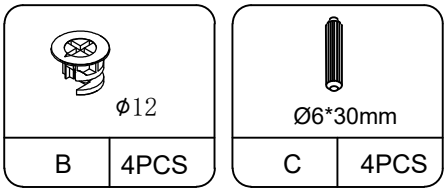

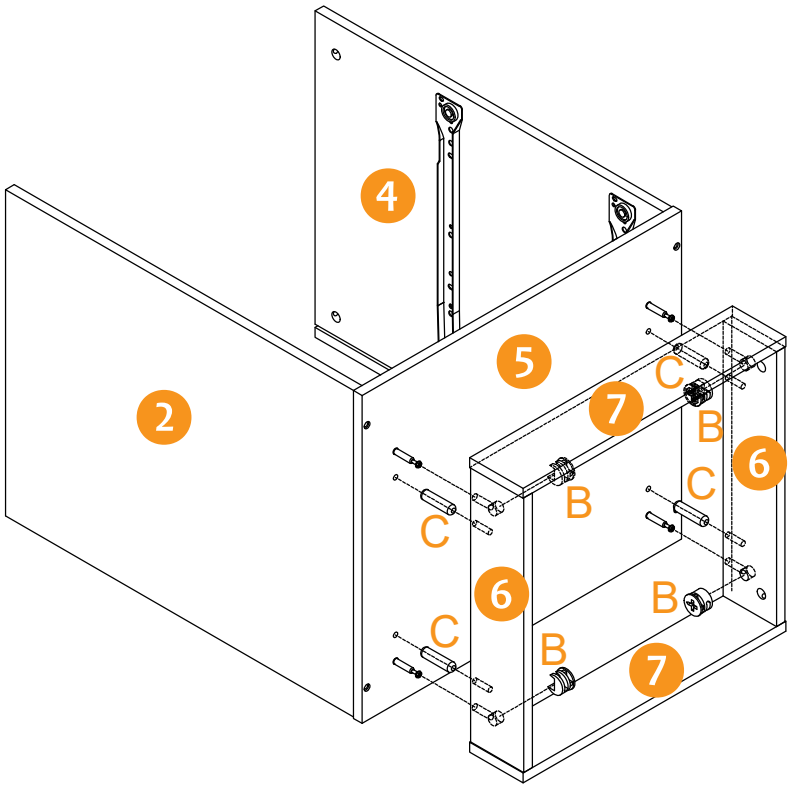

STEP 5

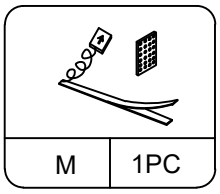

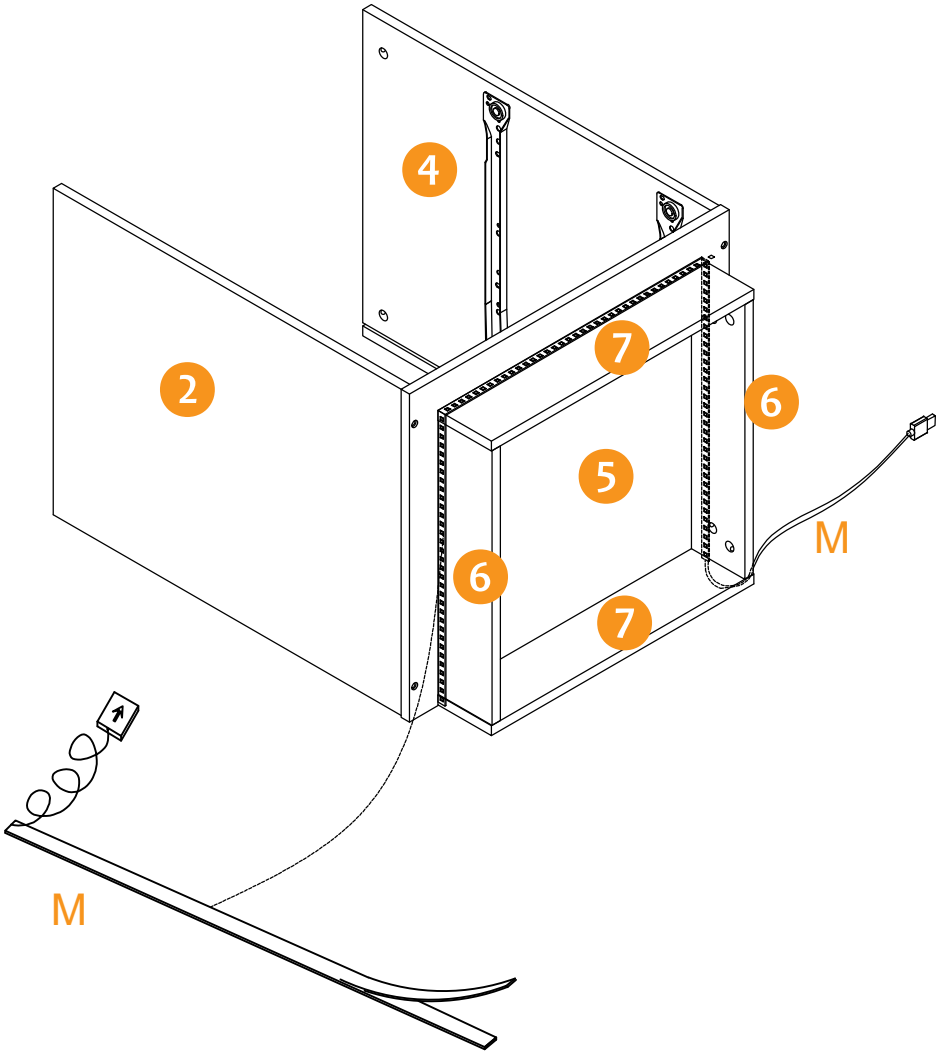

STEP 6

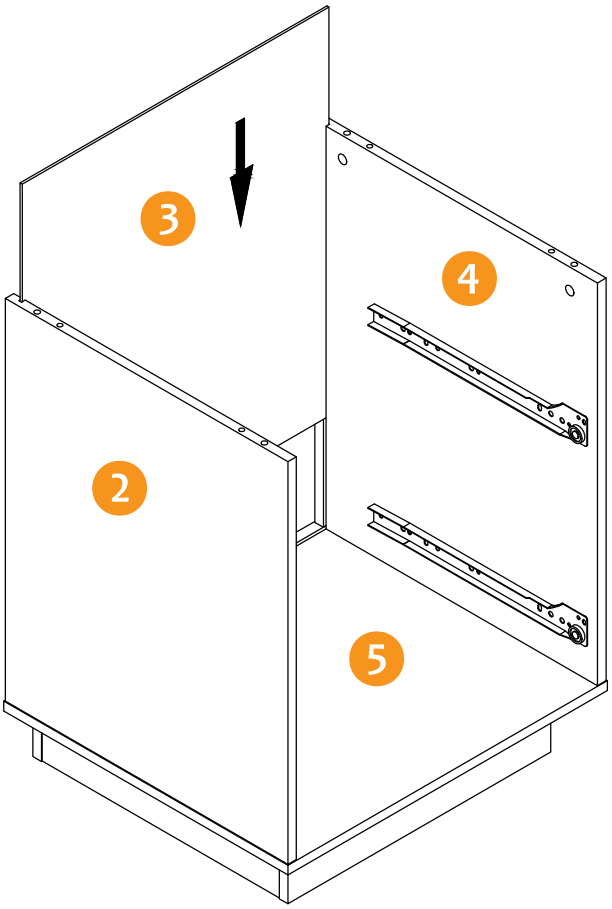

STEP 7

ϕ12

B	4PCS

Ø6*30mm

C	4PCS

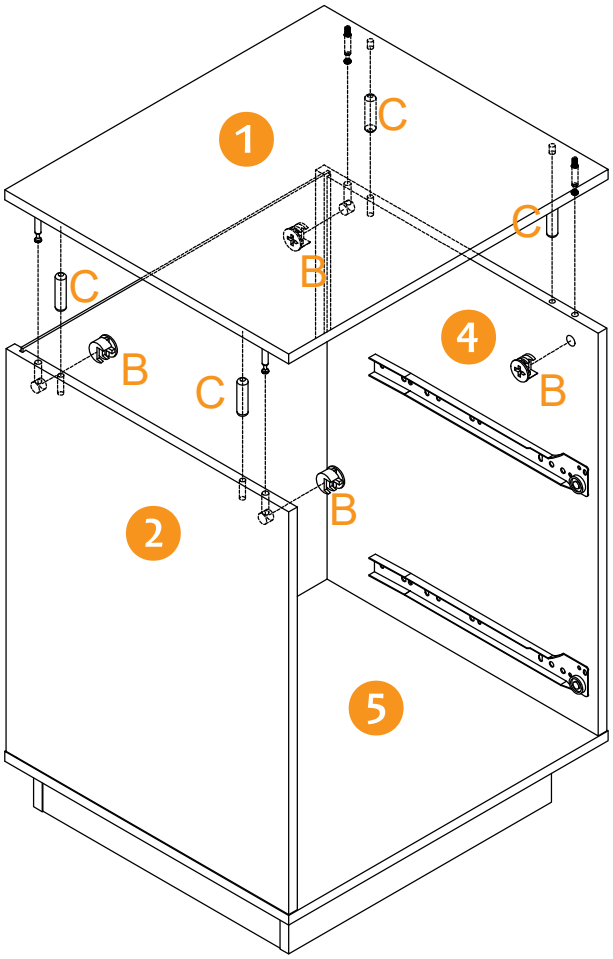

STEP 8

ϕ3*14mm

H	4PCS

G	4PCS

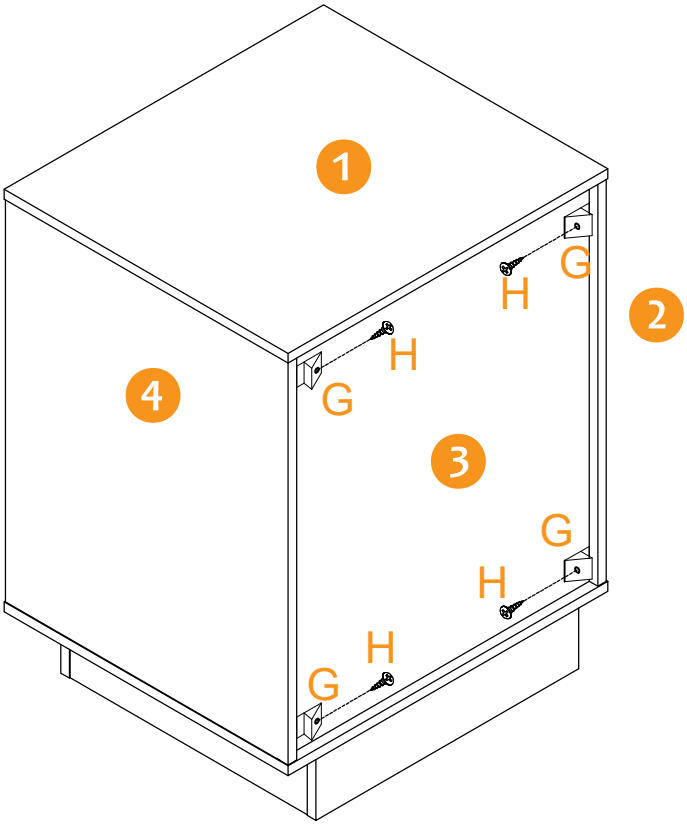

STEP 9

Ø4*40mm	
D	8PCS

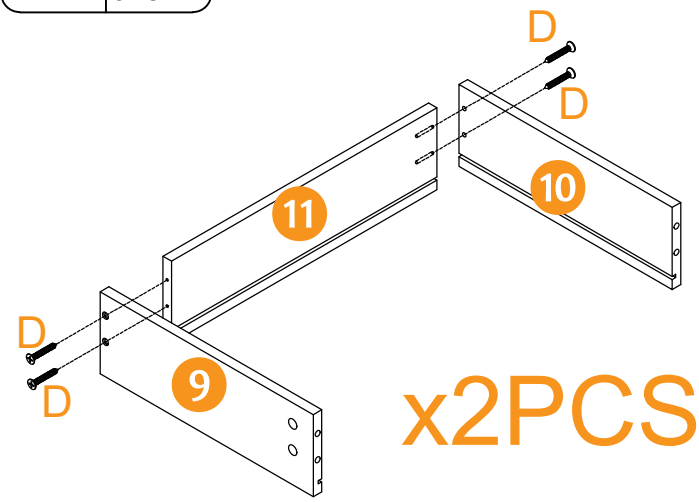

x2PCS

STEP 10

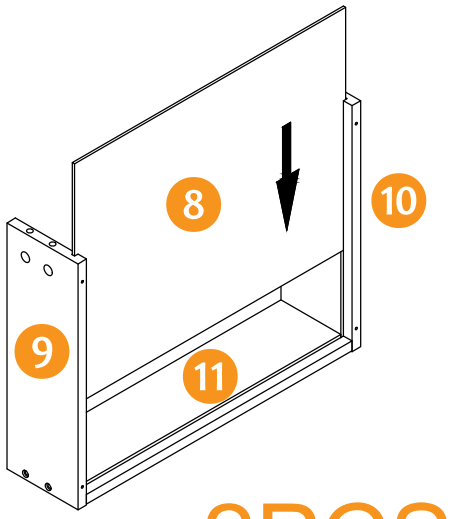

x2PCS

STEP 11

ϕ12	
B	8PCS

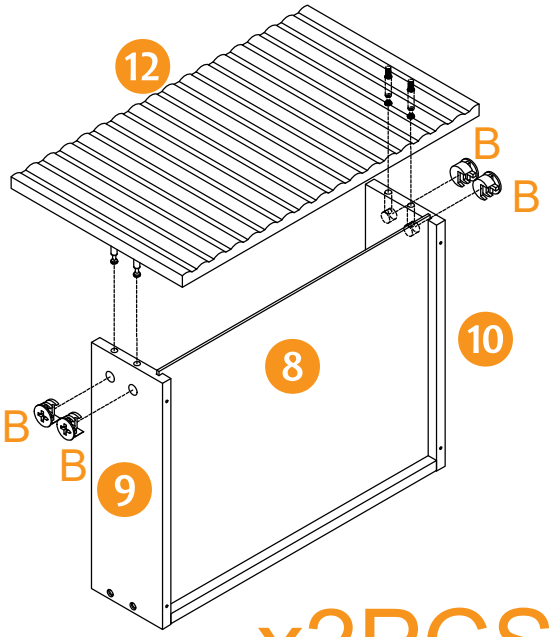

x2PCS

STEP 12

		ϕ3*12mm	
E	2PCS	F	4PCS

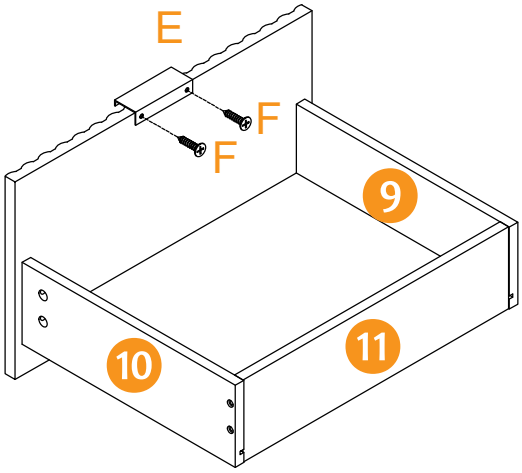

x2PCS

STEP 13

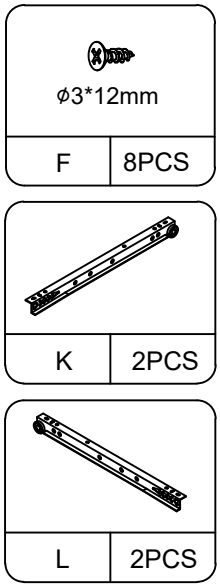

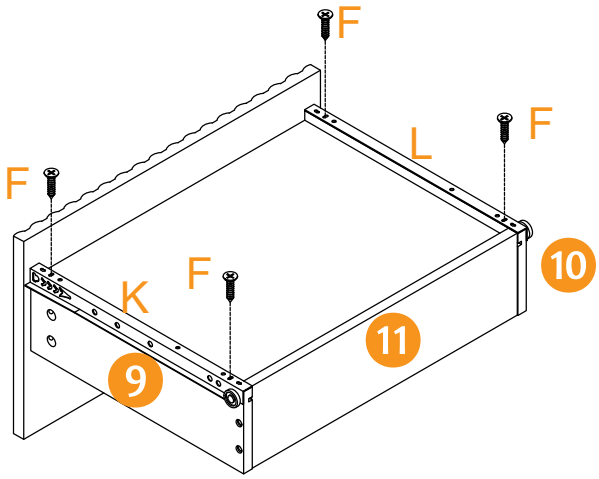

x2PCS
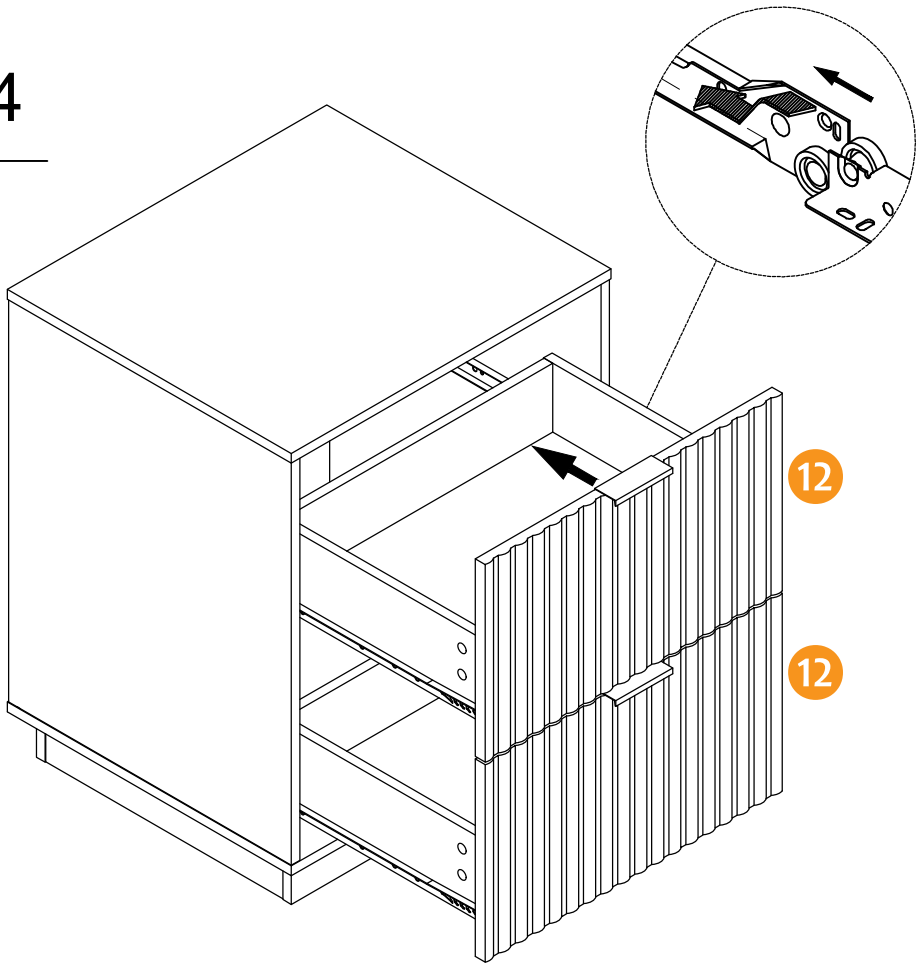
STEP 14