ASSEMBLY INSTRUCTIONS

CAUTION

- Inspect the wire insulation for any cuts, abrasions, or exposed copper that may have resulted during shipping. If there is a defect in the wire, do not attempt installation.
- Before starting installation of this fixture or removal of a previous fixture, disconnect the power by turning off the circuit breaker or by removing the fuse at the fuse box.

TOOLS REQUIRED


Ladder


Safety glasses


Electrical tape


Phillips screwdriver


Flat blade screwdriver


Pliers

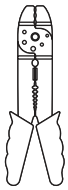
Wire strippers

*** PARTS SHOWN MAY DIFFER SLIGHTLY PER LIGHT FIXTURE**

HARDWARE INCLUDED

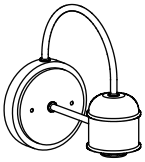
Fixture

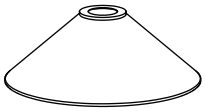
Shade

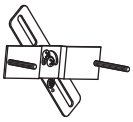
Mounting Unit


Ball Nuts


Rubber Rings


Mounting Screws


Wire Nuts

EXPLODED PARTS

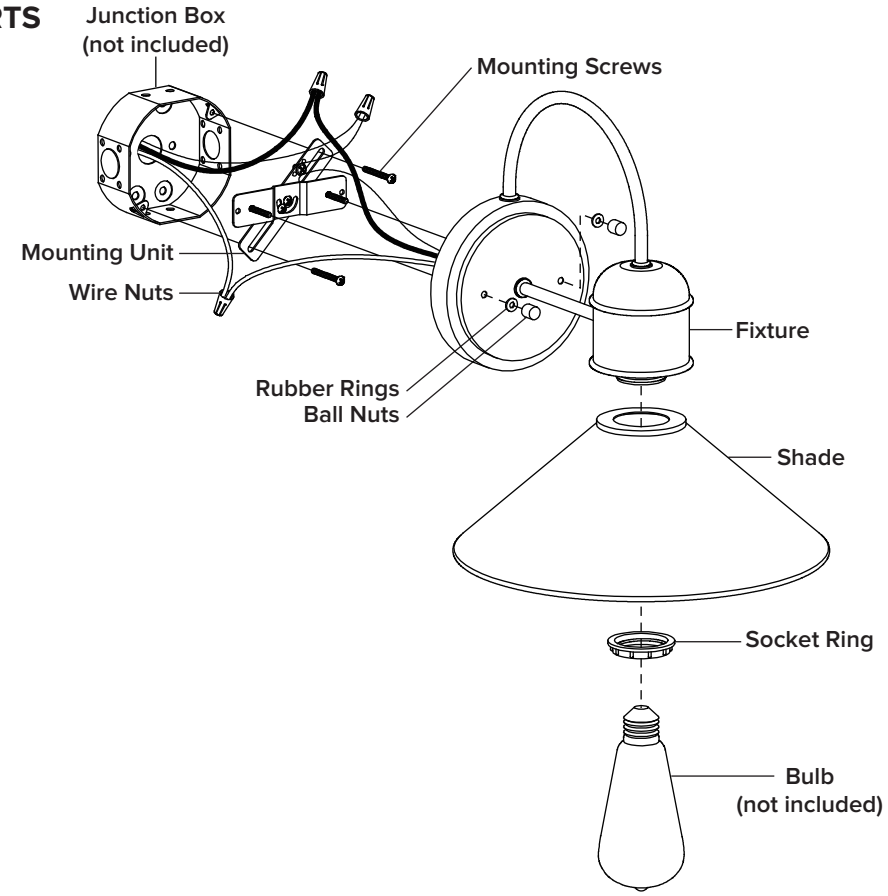

INSTALLATION

STEP 1

Unscrew the **rubber rings** and **ball nuts** from the **mounting unit**. Use the **mounting screws** to attach the **mounting unit** to the junction box (not included).

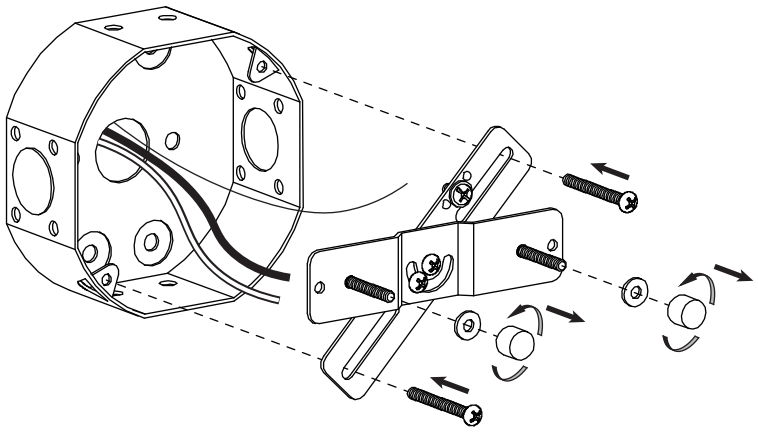

STEP 2

Make the electrical connection from the junction box (not included) to the **fixture**. Connect the ground wire to the **mounting unit** using the preinstalled green ground screw. Next, connect the live wire, neutral wire and ground wires with the supplied **wire nuts**. Secure with electrical tape.

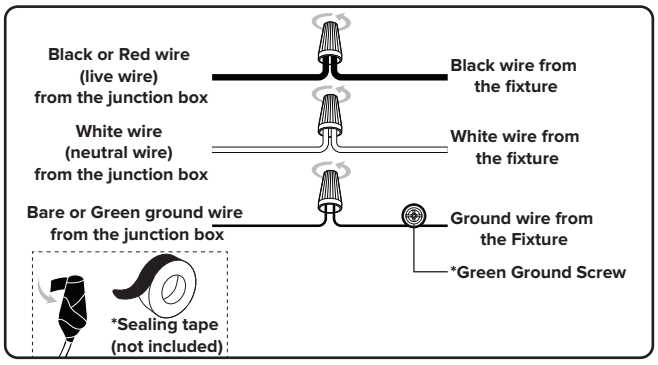

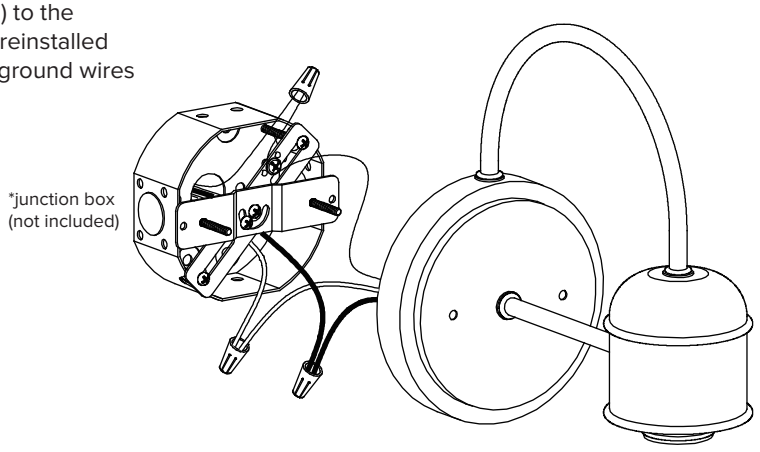

STEP 3

Attach the **fixture** to the **mounting unit** through screw holes as shown, and secure it with **rubber rings** and **ball nuts**.

NOTICE: Please use caulk in the back plate and wall mounting surface to prevent water from entering.

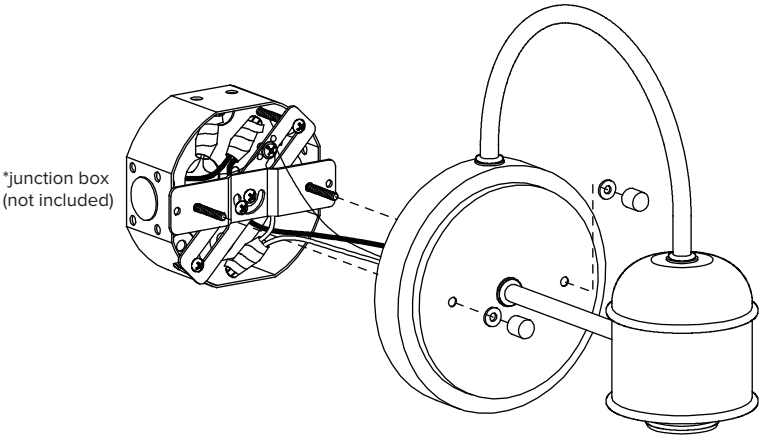

STEP 4

Remove the **socket ring** from the socket.
Attach the**shade**onto **fixture** using **socket ring**.

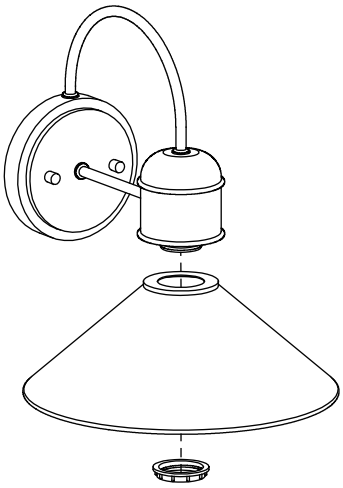

STEP 5

Install bulb (not included).

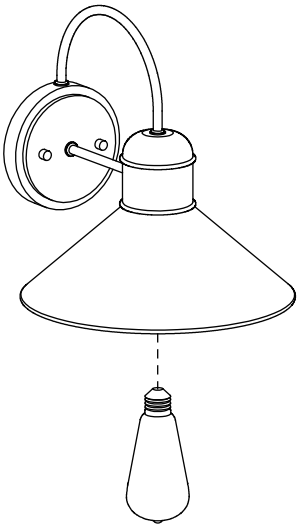



BULB BASE TYPE
Medium (E26)