INSTALLATION MANUAL

WOODBRIDGE® SHOWER DOOR

SCAN ME

To Activate Warranty

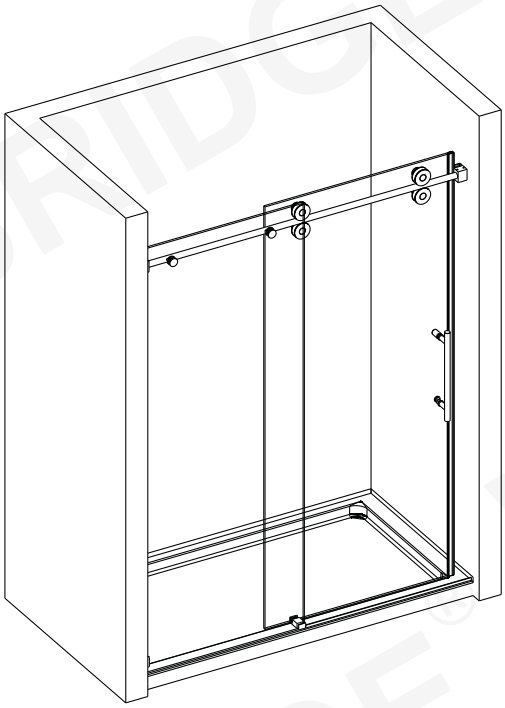

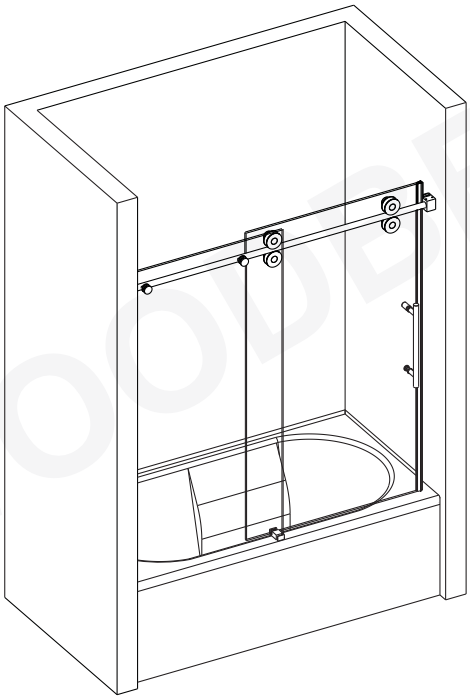

SHOWER DOORS:

DDM6076

DDM7276

TUB DOORS:

DDM6066

IMPORTANT!

WOODBRIDGE reserves the right to alter, modify or redesign products at any time without prior notice for the purpose of product improvement and customer experience. Please refer to WWW.WOODBRIDGEBATH.COM for the latest product details.

Questions?

Please Call Customer Support: 562-229-0088. (Monday - Friday 9 AM - 5 PM Pacific Standard Time)

Or Email: help@woodbridgebath.com

IMPORTANT

- WOODBRIDGE reserves the right to alter, modify, or redesign products at any time without prior notice for product improvement or functionality.
- Professional installation required. This product should be installed by someone experienced with the construction requirements for this type of project, the care necessary to responsibly and safely install, and familiarity with glass installation.
- The safety of all installations is the responsibility of the installer who should be licensed and bonded.
- To prevent breakage and injury, do not attempt to lift, move, or install the glass alone. Use assistance and suction cups intended for heavy glass when applicable.
- To prevent breakage and injury, do not lean or push against glass panels.
- The installation of this model requires drilling into the dam/curb/threshold to properly affix the clip, guide, and threshold. Contact the manufacturer of your base, or tub with any questions regarding drilling into their product, or consult your installation professional.
- This model requires minimum 3" dam/curb/threshold width to complete installation.
- Drawings included in this manual are illustrative only and do not reflect actual scale.
- No out of plumb adjustment.
- Glass cannot be installed if the overall width of the shower opening is greater than the width as described for the product.

WARNING FOR TEMPERED GLASS: TO AVOID RISK OF DAMAGE OR INJURY

- Tempered safety glass is designed that when broken, will shatter into thousands of tiny pieces, greatly reducing the chance of serious bodily harm.
- Follow all requirements and recommendations in the instruction manual.
- Perform a thorough inspection of the glass and hardware for any damage prior to installation.
- Do not install damaged glass.
- Do not install or operate if glass panels have chipped corners, splintered edges, or any other visual defect. If damage is found contact WOODBRIDGE immediately. If installed in this state WOODBRIDGE is not responsible for any breakage.
- Do not install glass panels that have been dropped on, or bumped into any surface harder than itself.
- Improper handling may cause breakage.
  While incredibly resistant to direct impact, corners and edges are the most susceptible to damage, causing breakage. These edges should be protected and handled with care, never allowed to come into contact with any material harder than itself, such as tile, stone, metal, or even other glass. A concentrated point of impact or contact with such material can cause the glass to shatter. Tempered glass may shatter all at once, or partially, releasing hours or even days later with vibration and normal use.
- Incorrect installation of the hardware, rollers, stoppers, or glass may cause breakage.
  Improper installation would include loose hardware, or lack of gaskets between hardware and glass. Installing out of level or plumb may lead to breakage.
- Improper use of the product.
  Do not place towels or anything else over guide rail. Aggressively opening or closing the slider may cause damage to the glass which could lead to breakage.

- Do not attempt to cut tempered glass.
- Always wear safety equipment such as goggles, work gloves, proper footwear, etc. during installation.
- Instruct homeowner on how to conduct periodic inspections and how to properly maintain the glass and all hardware.
- Consideration should be given when installing tempered glass products in households with young children or the elderly.

PREPARATION

- Thoroughly read the instructions before installing or using the product.
- After boxes and packages are open, before installation, check that all items from the parts list are there by marking each one off the list.
- Examine the glass and parts for defects or damage.
- Please note that WOODBRIDGE will not replace any missing or damaged items free of charge after 5 business days or if the product has been installed.
- Building codes vary by location and you should refer to your local building codes when installing. WOODBRIDGE is not responsible for code compliance and will not accept returns on that basis.
- Prior to installation ensure that all surfaces are smooth and even. Ensure the dam/curb/-threshold is level side to side and that it has slope/fall in the direction of the shower pan. Ensure the walls are plumb and the opening measures the same top and bottom. Ensure that the installation surface is solid and able to support the weight of the doors.
- Please note that irregular installation surface, round lower corners, or out of plumb walls will result in serious problems for your installation.
- Some adjustments and drilling/screwing will be necessary throughout installation.
- WOODBRIDGE shower doors are not designed to be installed on fiberglass surrounds that have round lower corners or lack of solid mounting surface.
- Glass must never be set down directly on any hard surface. Always use pieces of wood or thick cardboard to protect lower edge at all times. Leave corner protectors in place until it is time to remove them.

Important Note

Attention:

These WOODBRIDGE shower doors include SHATTER-SAFE protective film on the side of the glass without the certification information printed on it, see Figs. 1 and 2 .

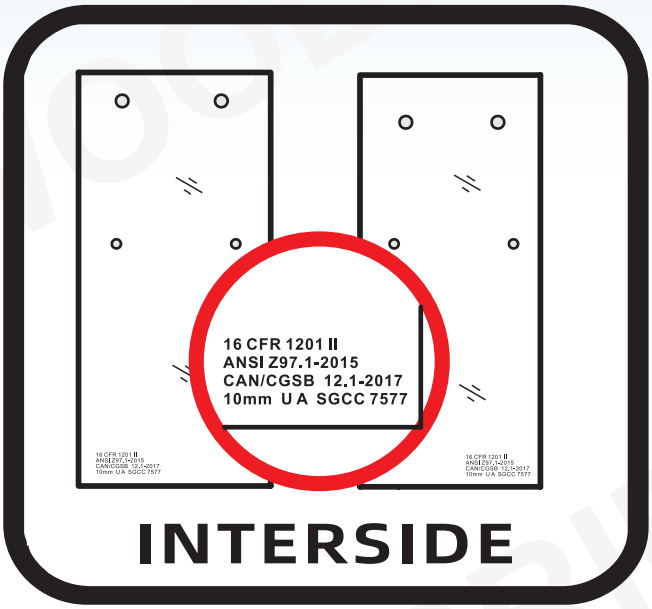

Fig 1

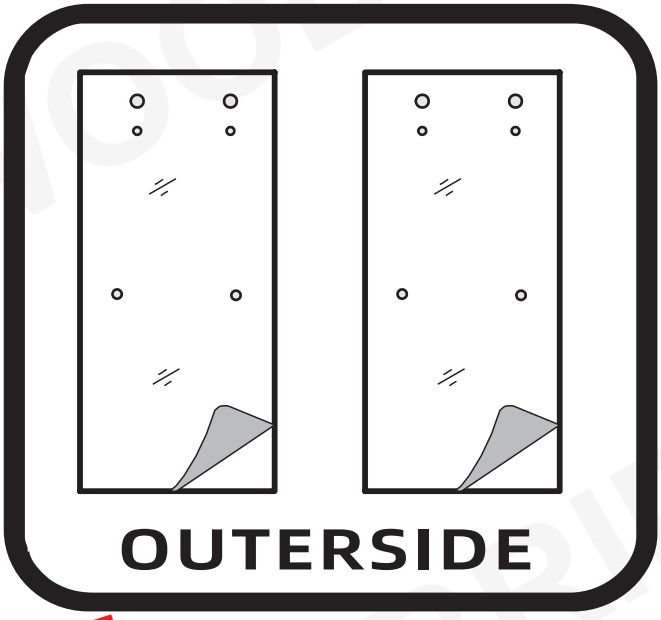

Fig 2

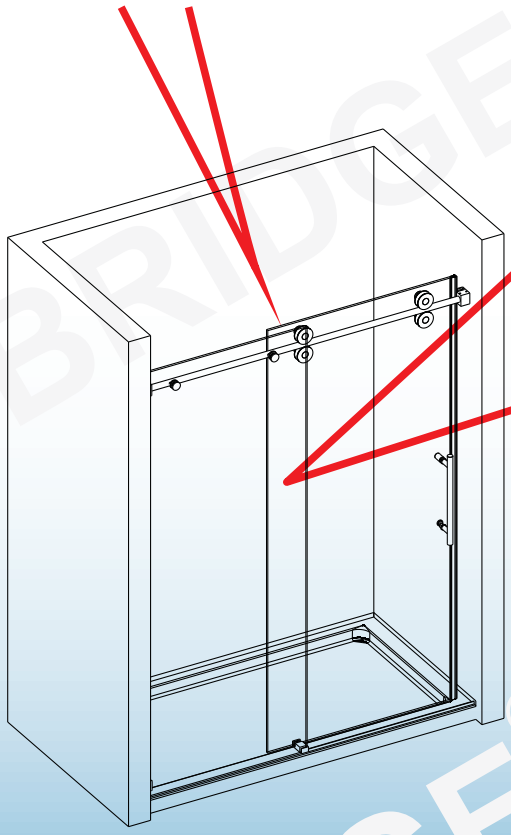

SHATTER-SAFE protective film helps to hold glass in place in the event of breakage. Allowing the panel to be safely removed by a professional at a later date.

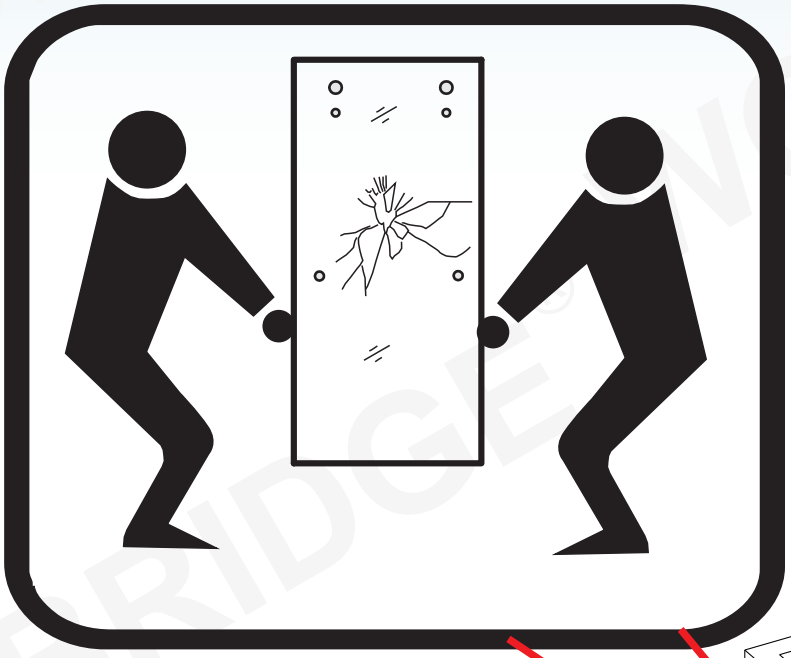

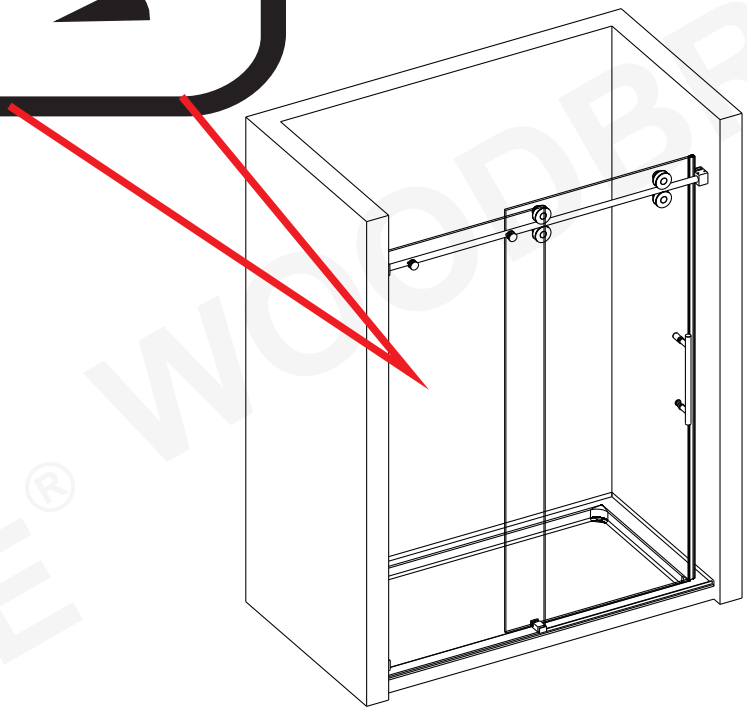

In the event of breakage please follow the steps below.

1. If someone is inside the shower, move the panel slowly out of the way and exit the bathroom as soon as possible. Do not allow anyone to re-enter bathroom until prepared to remove and dispose of broken panel.

2. Utilize safety precautions such as a hard-hat, safety glasses, leather gloves, proper footwear and moving blankets to minimize risk of injury.

3. It is recommended that two people assist in the removal of the panel. One person to hold panel steady, and the other to un-install the hardware. Then carefully remove glass from shower and lay flat on cardboard or plywood until it can be removed. Once the panel is laid flat, a razor knife or box cutter can be utilized to cut the film and remove in smaller pieces.

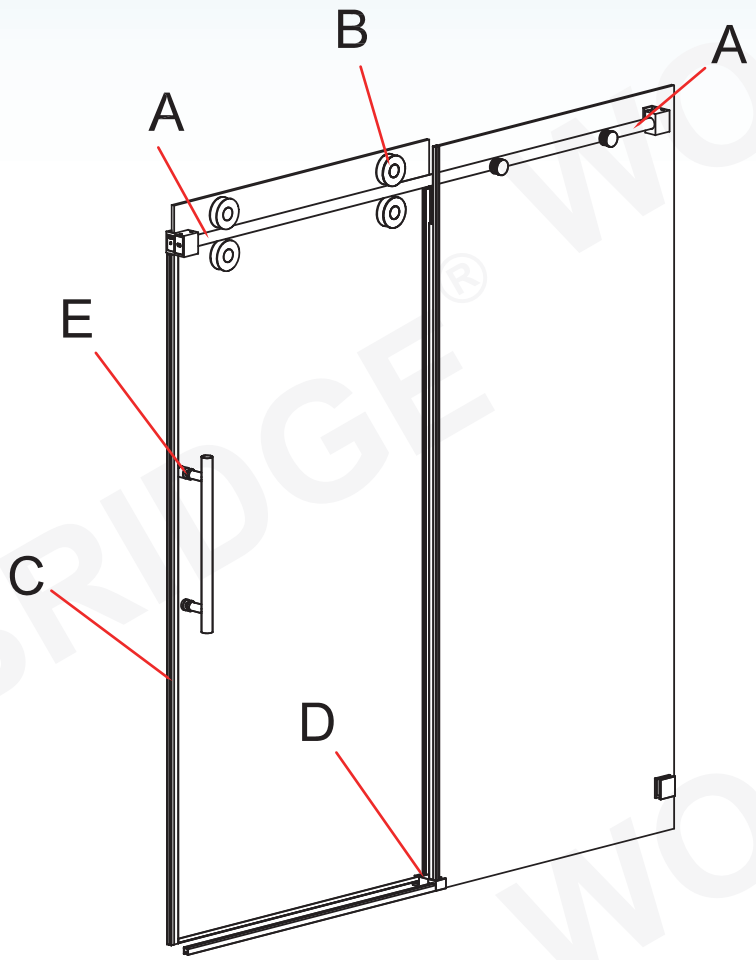

IMPORTANT INFORMATION REGARDING THE INSTALLATION OF THIS SHOWER DOOR

A. Guide Rail Brackets must be firmly attached to the wall. Installation into a stud is strongly recommended. All of the guide rail bracket set screws must be accessible and tightened.

B. Roller Wheel Assembly safety set screws: must be accessible and must be retightened with Thread Lock during installation. Door-side stopper must be installed at the proper position to prevent the door from contacting the wall.

C. Bulb Vinyl Seal must be installed on the closing edge of the Door Glass to prevent the door from contacting the wall.

D. The Guide Block must be screwed to the threshold and installed square with the Panel Glass and Door Glass. Installing the guide block crooked may damage the bottom edge of the Door Glass and lead to breakage.

E. When installing the rollers and handles to the glass doors, make sure that clear rubber gaskets are in between the glass doors and the related hardware. Metal cannot contact the glass holes directly.

Tools

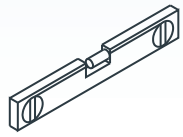

LEVEL

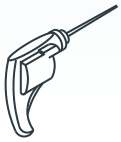

POWER DRILL

PENCIL

SILICONE

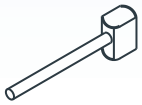

MALLET

TAPE MEASURE

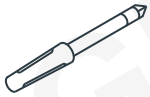

SCREWDRIVER

6 mm & 8 mm (1/4" & 5/16") DRILL BITS

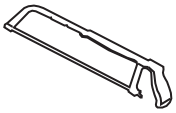

HACKSAW

SAFETY GLASSES

*** Use a 6.35mm (¼") drill bit for ceramic when drilling into ceramic tiles**

INSTRUCTIONS THAT, IF IGNORED COULD RESULT IN SERIOUS INJURY OR DEATH CAUSED BY INCORRECT HANDLING OR INSTALLATION OF THE PRODUCT. THESE INSTRUCTIONS MUST BE OBSERVED FOR SAFE INSTALLATION!

LICENSED AND INSURED PROFESSIONAL CONTRACTOR IS REQUIRED TO INSTALL THIS PRODUCT INCLUDING ASSISTANCE OF A SECOND PERSON DURING INSTALLATION

No modifications to the product are allowed. Modifications of any types to the product will result in serious injuries or may cause death.

IMPORTANT: Do not install the handle on to the glass door until the instruction tells you to do so. Never lift the glass using the handle. Failure to do so will result in serious personal injury and could cause damage to the glass. Professional-grade glass suction cups are highly recommended while handling extremely heavy glass. This product must be installed on a finished threshold and against finished walls only. This product is intended for residential use only.

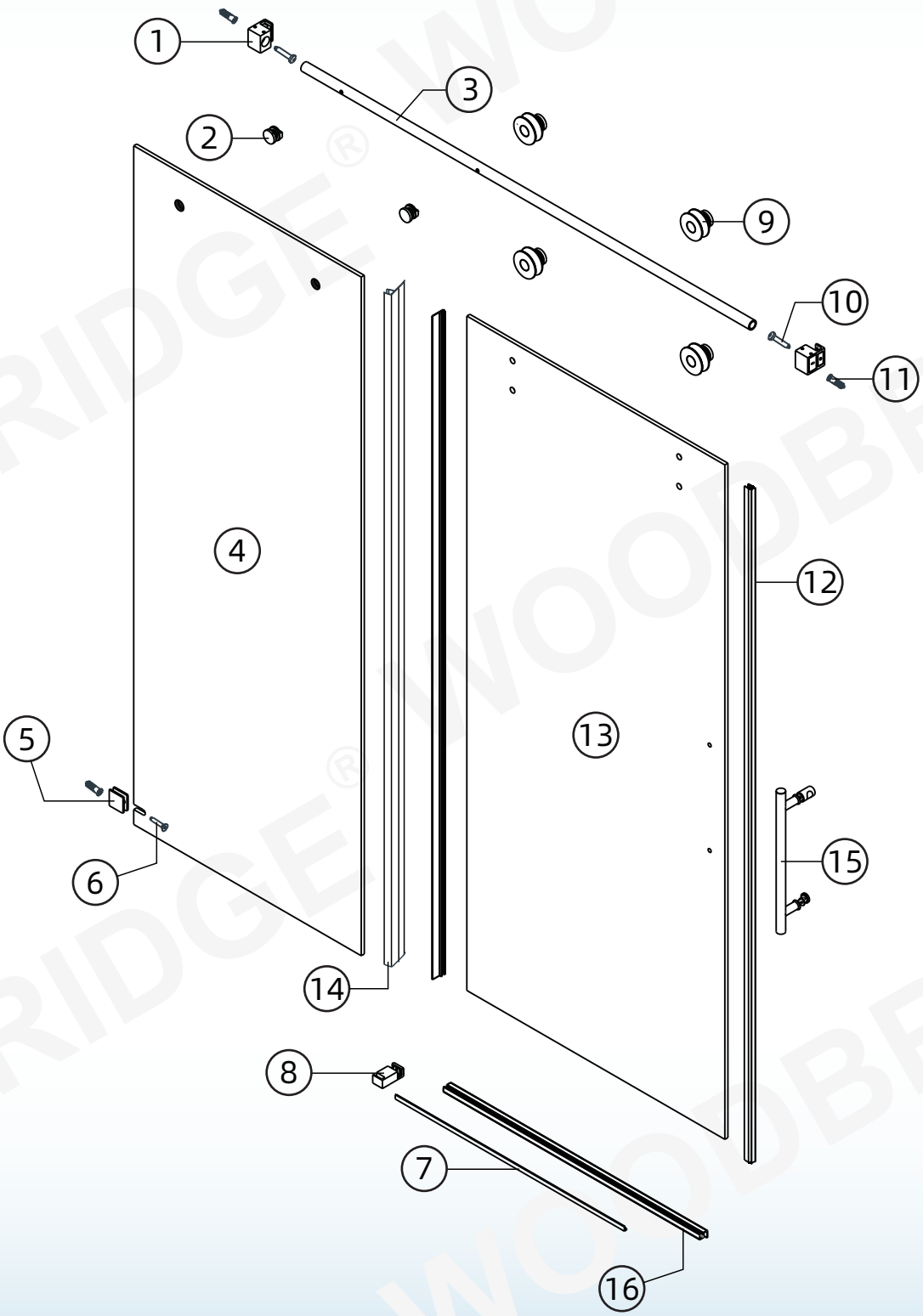
1
2
3
4
5
6
7
8
9
10
11
12
13
14
15
16

Parts List

1 Guide rail bracket

×2

2 Track holder for fixed panel

×2

3 Rail

×1

4 Fixed panel

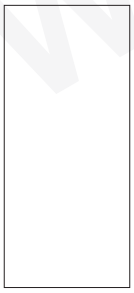

×1

5 Wall mount bracket

×1

6 Screw St4×30

×1

7 Anti-splash threshold

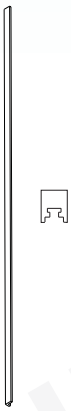

×1

8 Floor guide

×1

9 Φ70 Roller

×4

10 Screw St5×40

×2

11 Wall plugs

×3

12 Door seal

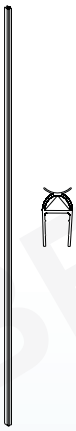

×1

13 Sliding door

×1

14 Fixed panel seal

×2

15 Handle

×1

16 Door seal

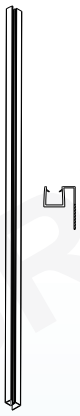

×1

Specific Preparation

No Out-of-Plumb Adjustment; Verify threshold and walls with a level

Threshold must be level

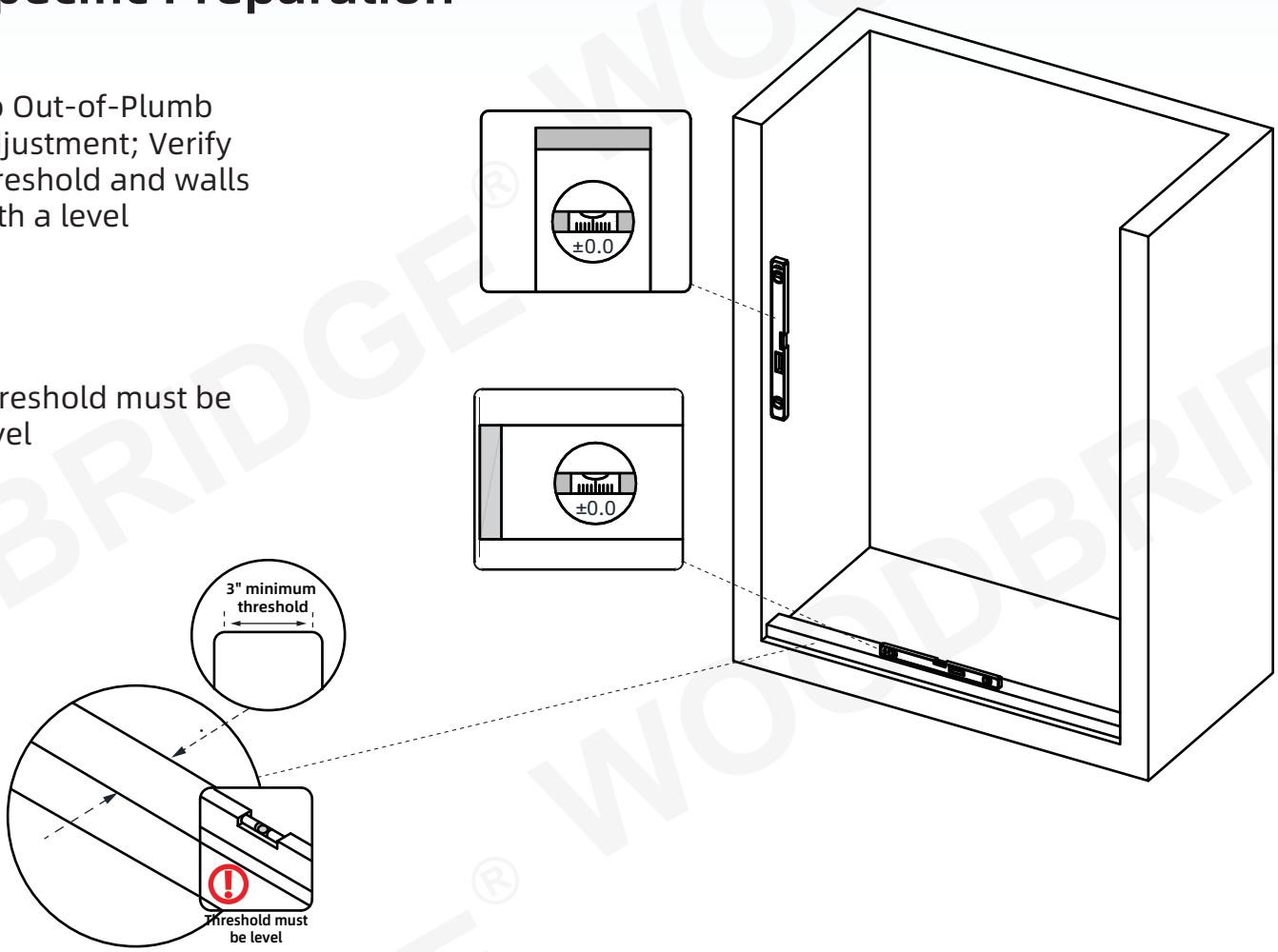

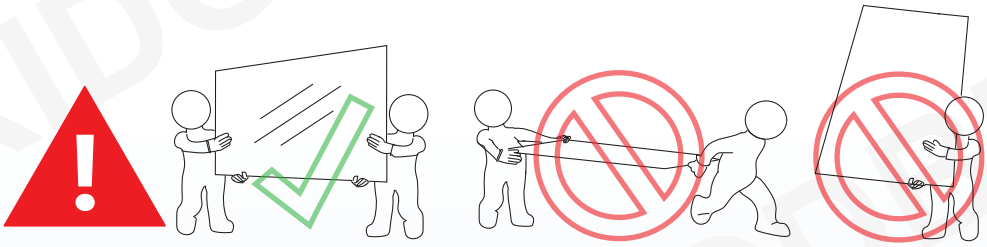

CAUTION! TWO PERSON LIFT REQUIRED

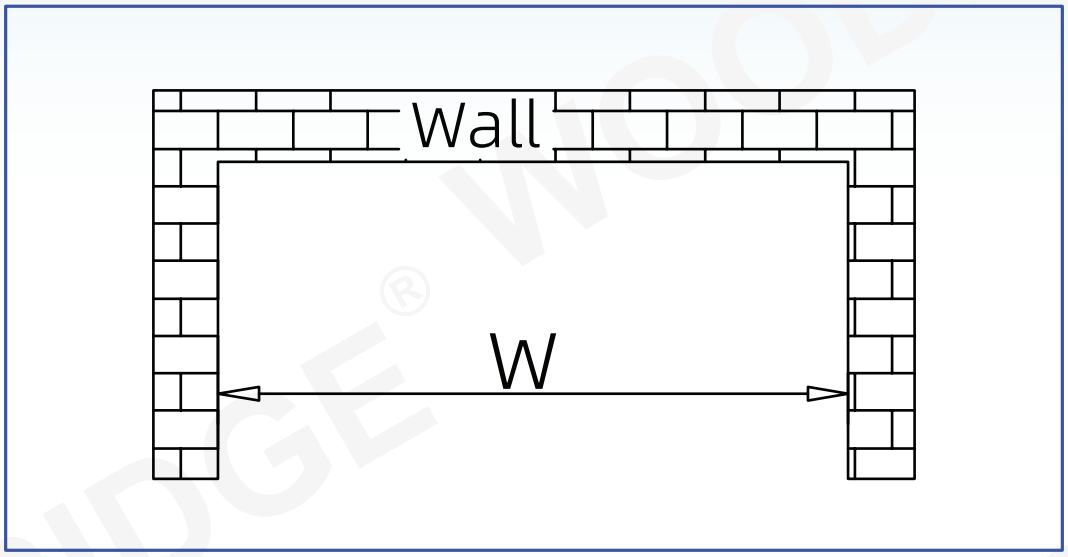

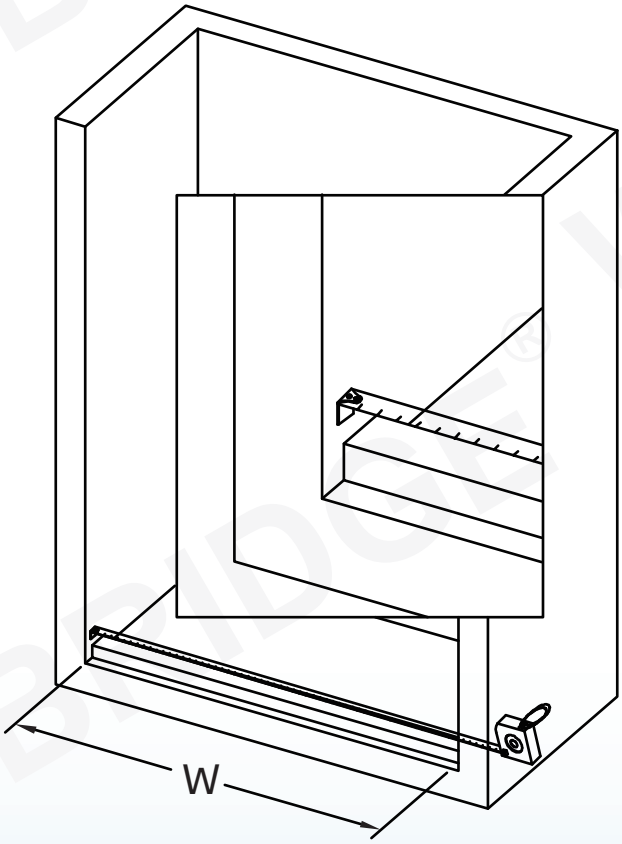

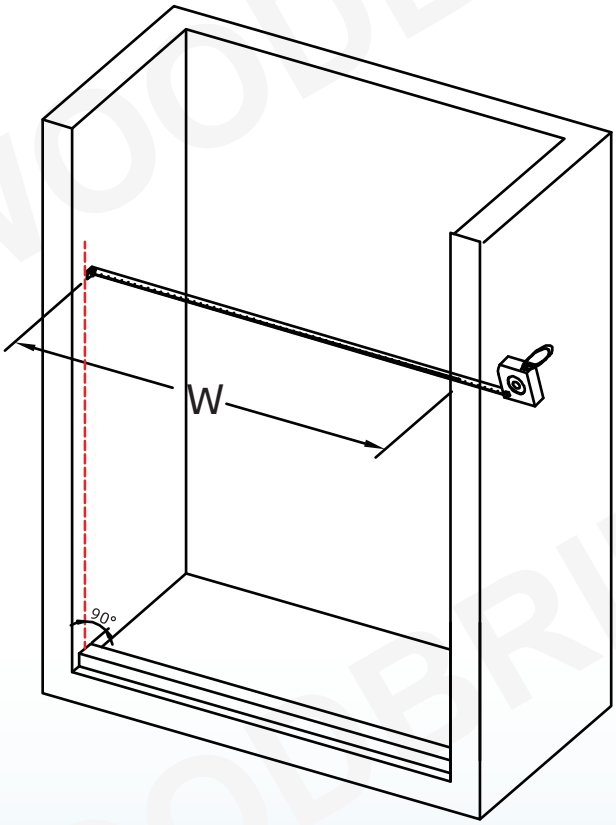

Measure the distance between two finished walls. This distance is marked as W.

STEP 1

Adjust the shower base if needed. Ensure the shower base is level and the walls are plumb.

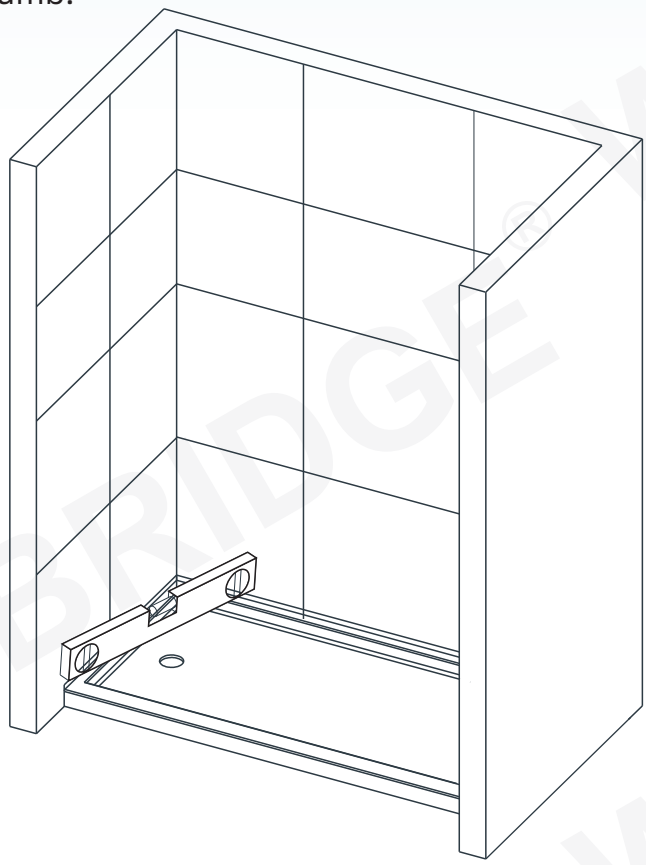

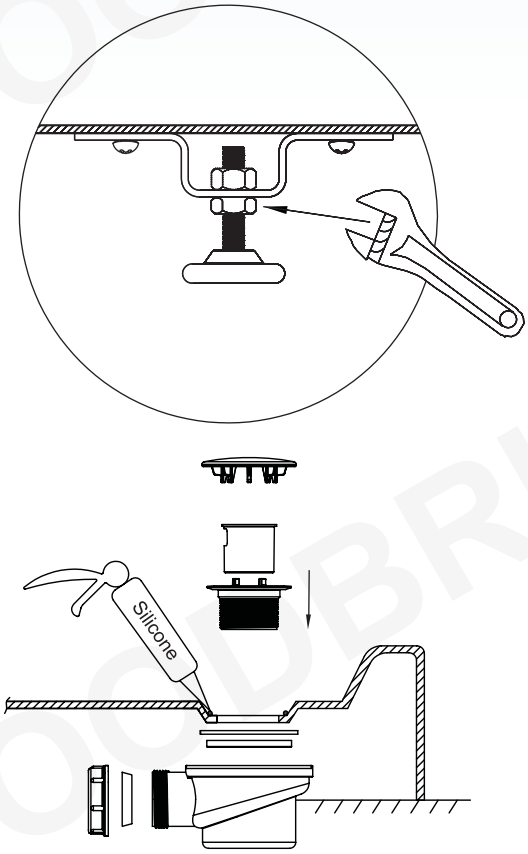

STEP 2

1. Adjust the shower base if needed. Ensure the shower base is level and the walls are plumb.

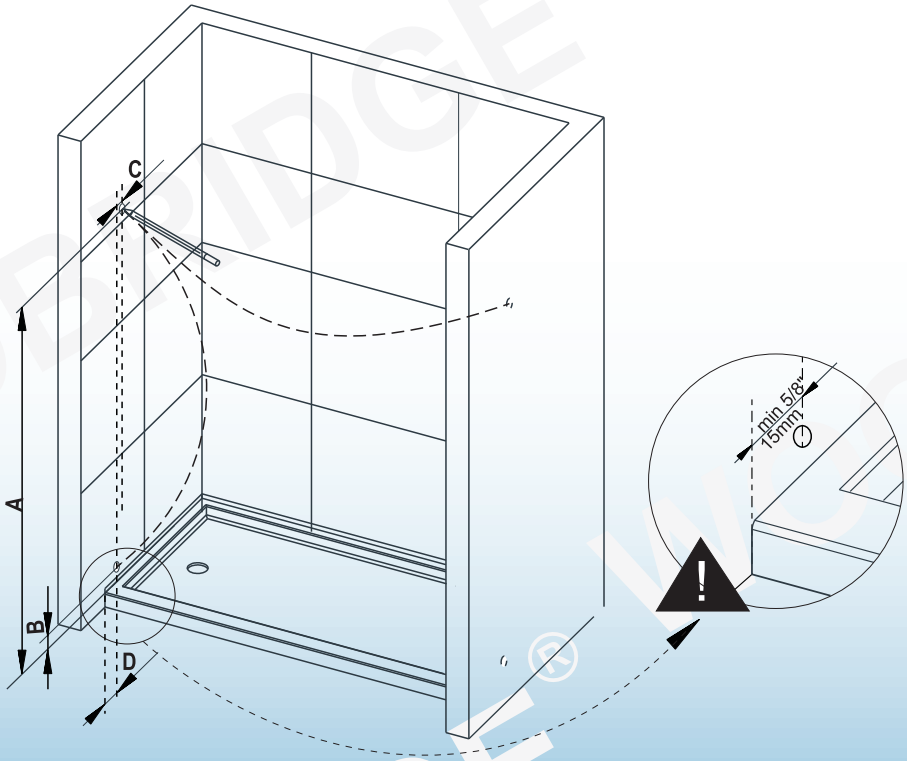

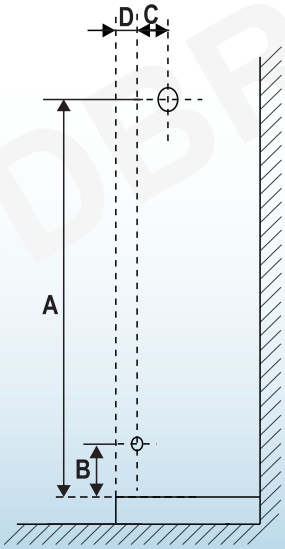

2. Adjust the shower base if needed. Ensure the shower base is level and the walls are plumb.

Product Height	A	B	C	D
60"(1524mm)	56 4/5"(1443mm)	3 15/16" (100mm)	1" (25.4mm)	min5/8" (15mm)
66"(1676mm)	62 4/5"(1595mm)			
72"(1828mm)	68 4/5"(1747mm)			
75"(1905mm)	71 4/5"(1824mm)			
76"(1930mm)	72 4/5"(1849mm)			
78"(1981mm)	74 4/5"(1900mm)			
79"(2006mm)	75 4/5"(1925mm)			

STEP 3

1. Adjust the shower base if needed. Ensure the shower base is level and the walls are plumb.

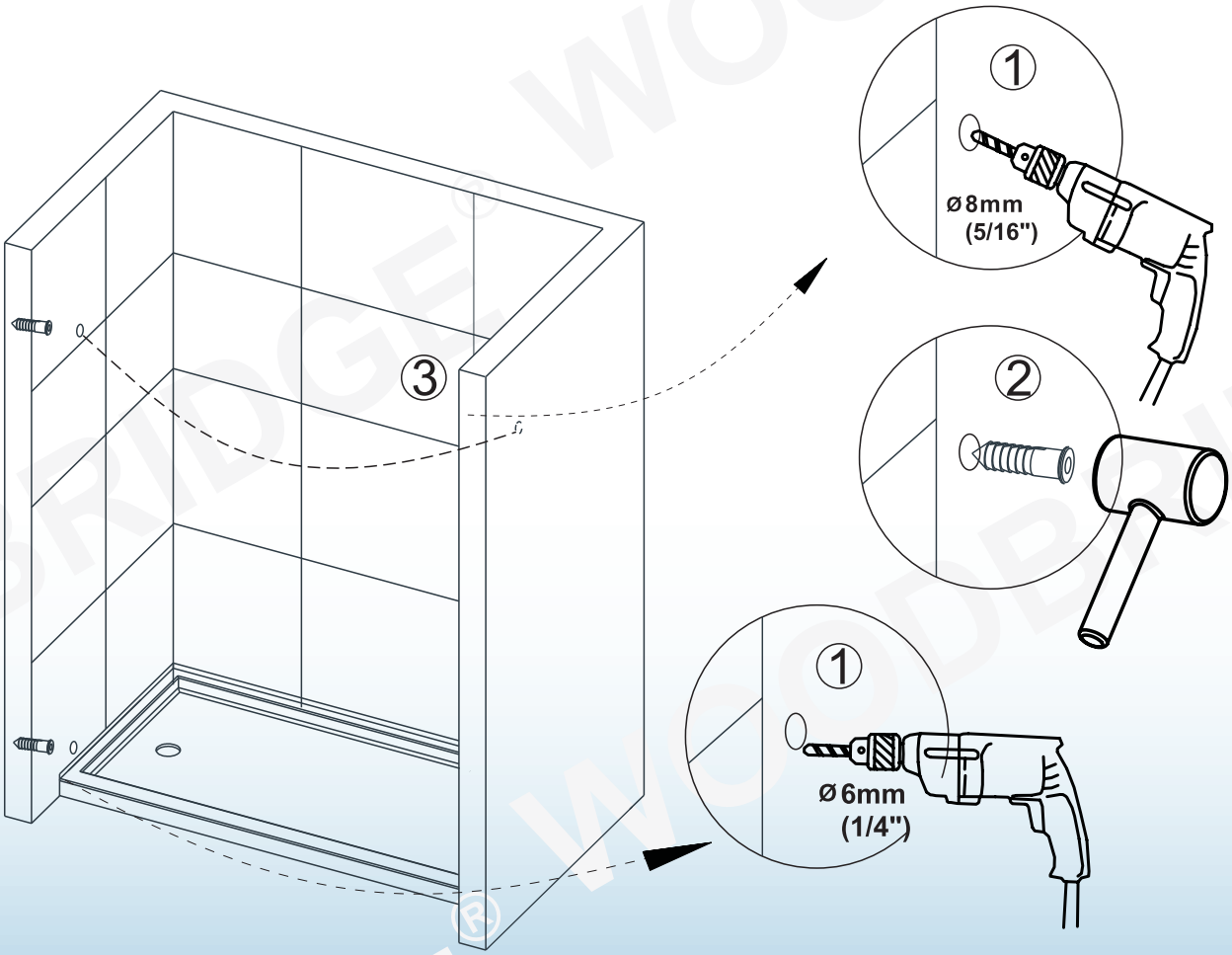

STEP 4

Adjust the shower base if needed. Ensure the shower base is level and the walls are plumb.

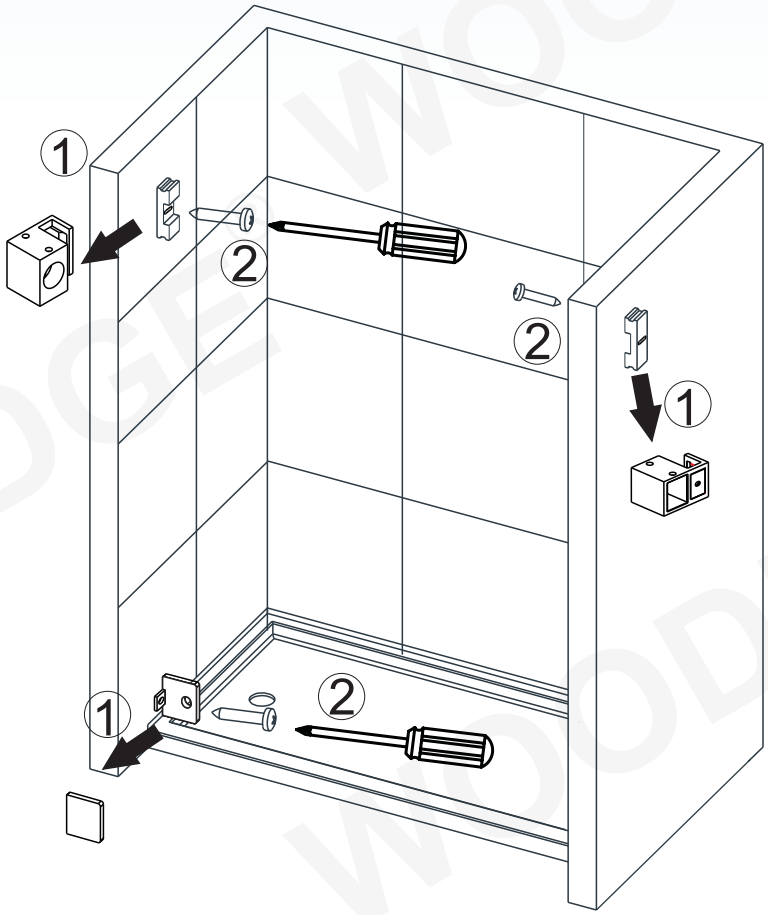

STEP 5

1. Adjust the shower base if needed. Ensure the shower base is level and the walls are plumb.

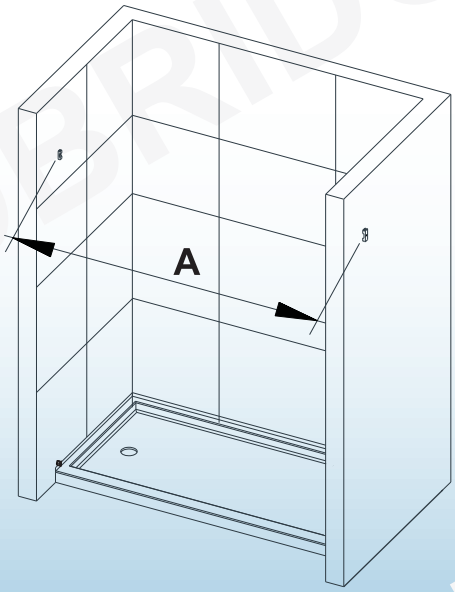

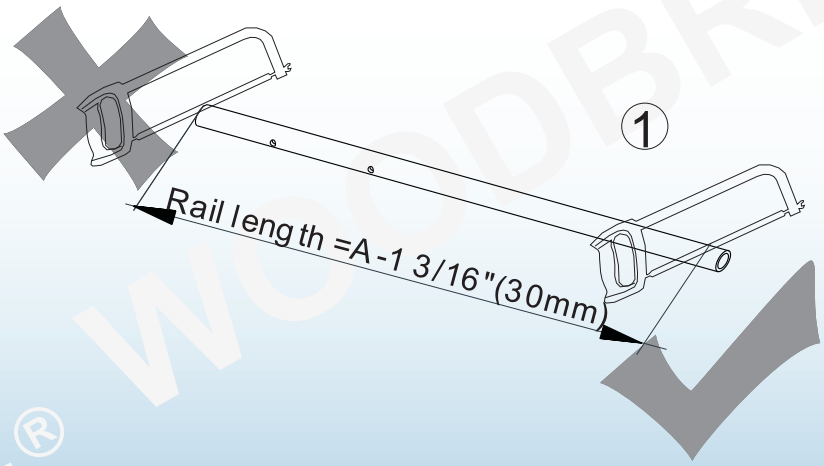

2. Adjust the shower base if needed. Ensure the shower base is level and the walls are plumb.

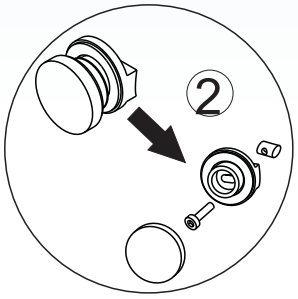

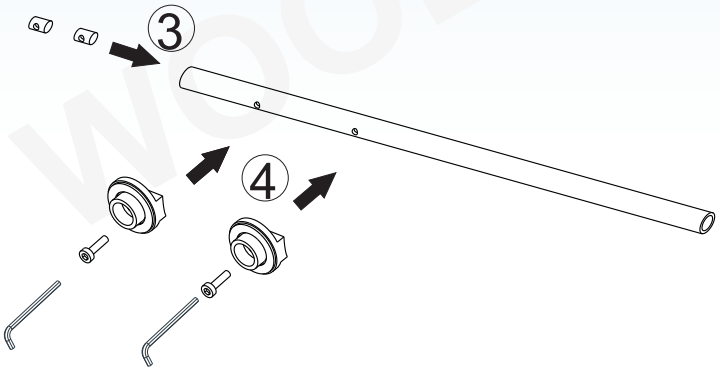

3. Adjust the shower base if needed. Ensure the shower base is level and the walls are plumb.

4. Adjust the shower base if needed. Ensure the shower base is level and the walls are plumb.

STEP 6

1. Adjust the shower base if needed. Ensure the shower base is level and the walls are plumb.

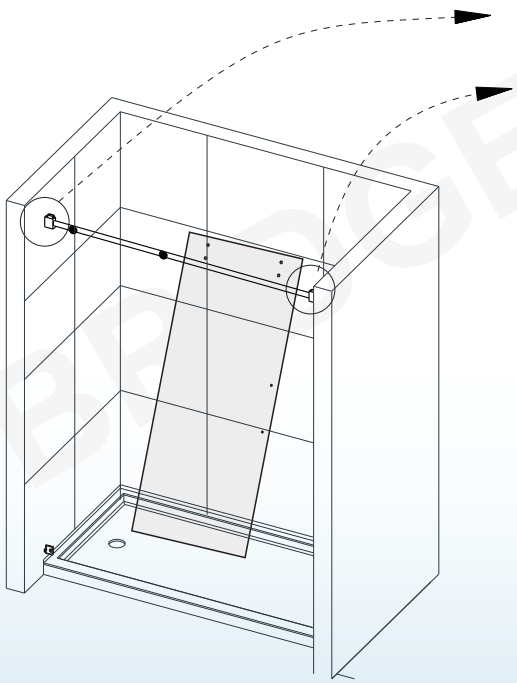

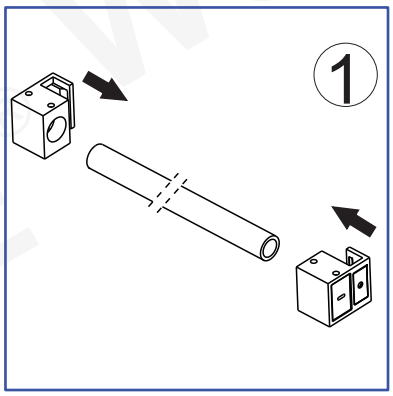

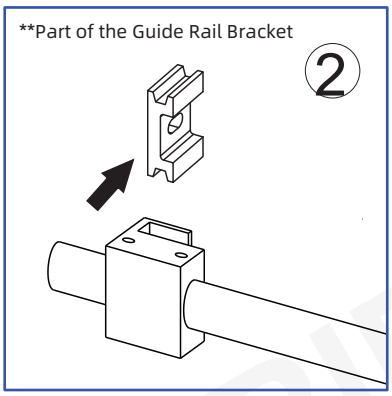

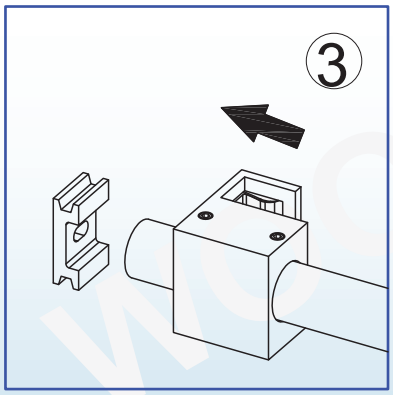

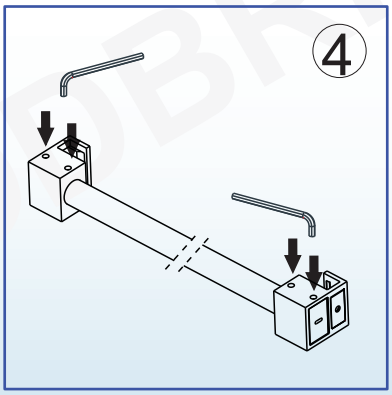

Please put the door panel inside the shower base prior to the top rail installation !

2. Adjust the shower base if needed. Ensure the shower base is level and the walls are plumb.

3. Adjust the shower base if needed. Ensure the shower base is level and the walls are plumb.

STEP 7

1. Adjust the shower base if needed. Ensure the shower base is level and the walls are plumb.

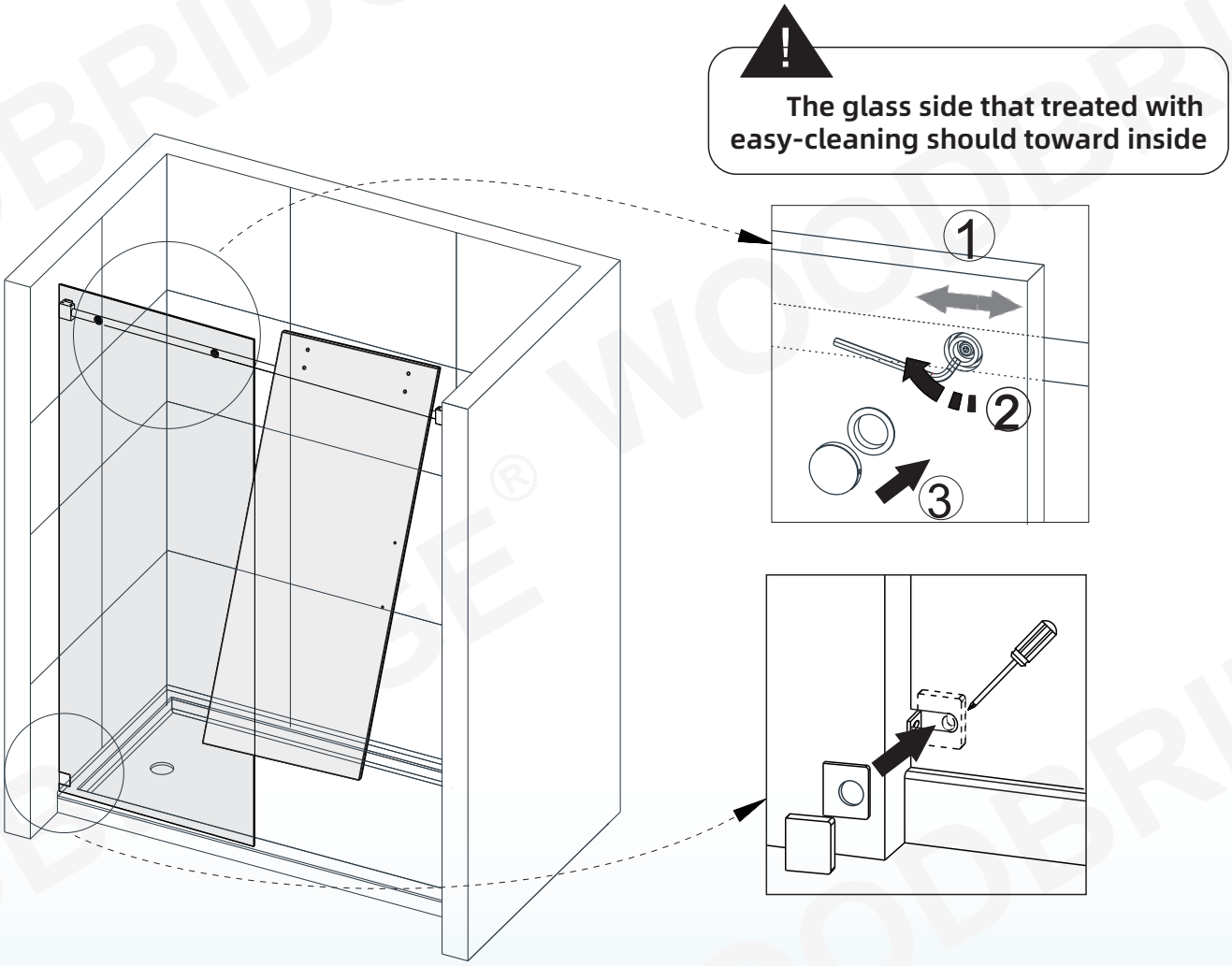

STEP 8

Adjust the shower base if needed. Ensure the shower base is level and the walls are plumb.

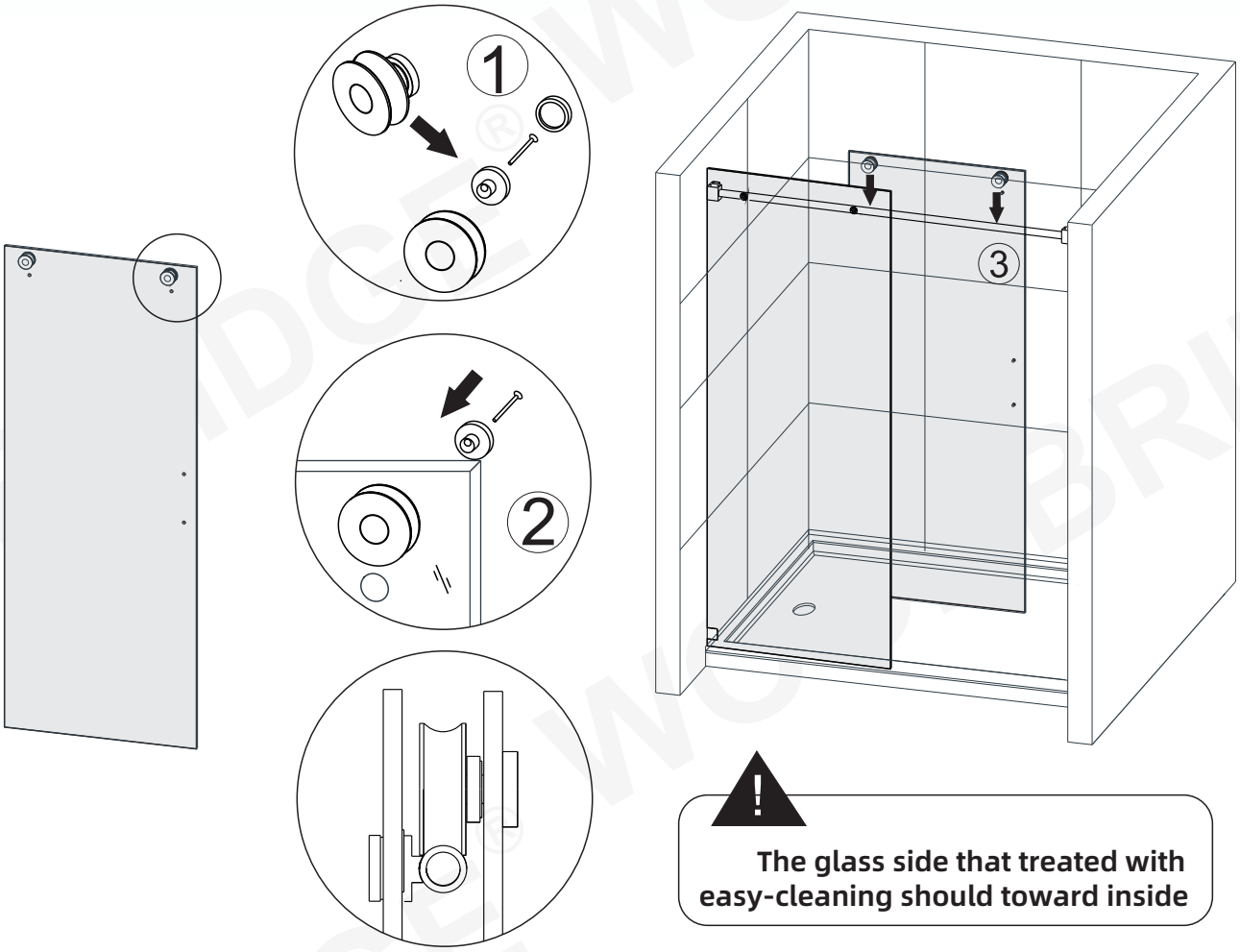

The glass side that treated with easy-cleaning should toward inside

STEP 9

Adjust the shower base if needed. Ensure the shower base is level and the walls are plumb.

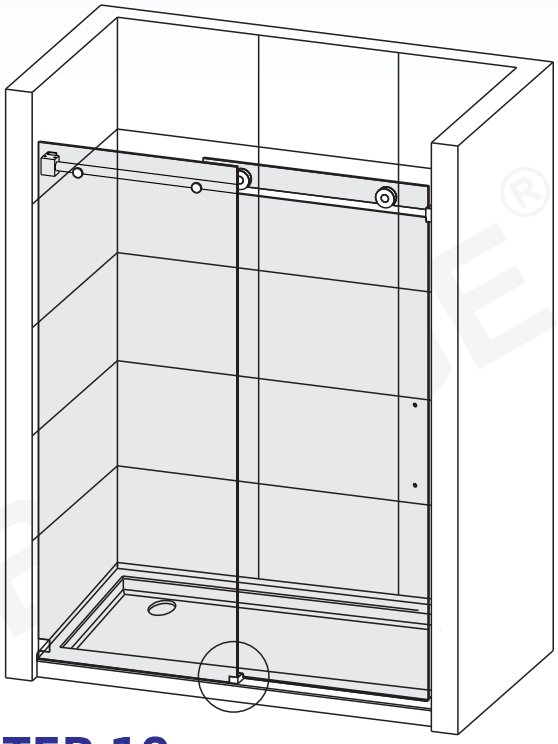

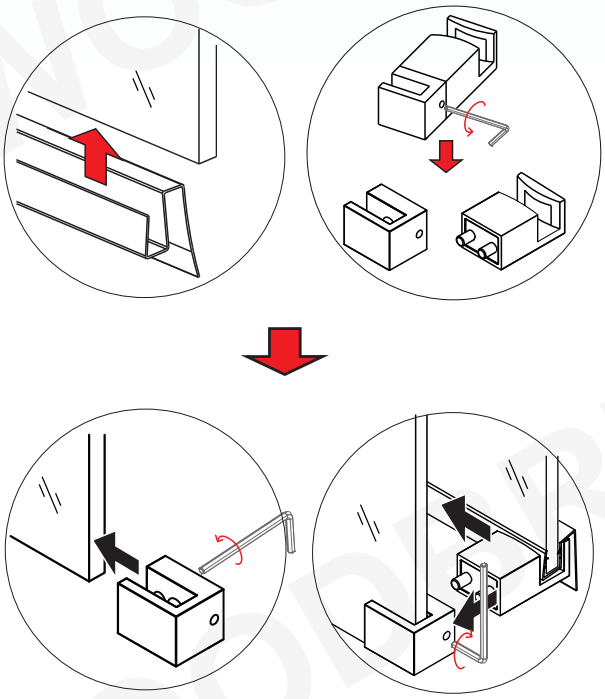

STEP 10

1. Adjust the shower base if needed. Ensure the shower base is level and the walls are plumb.

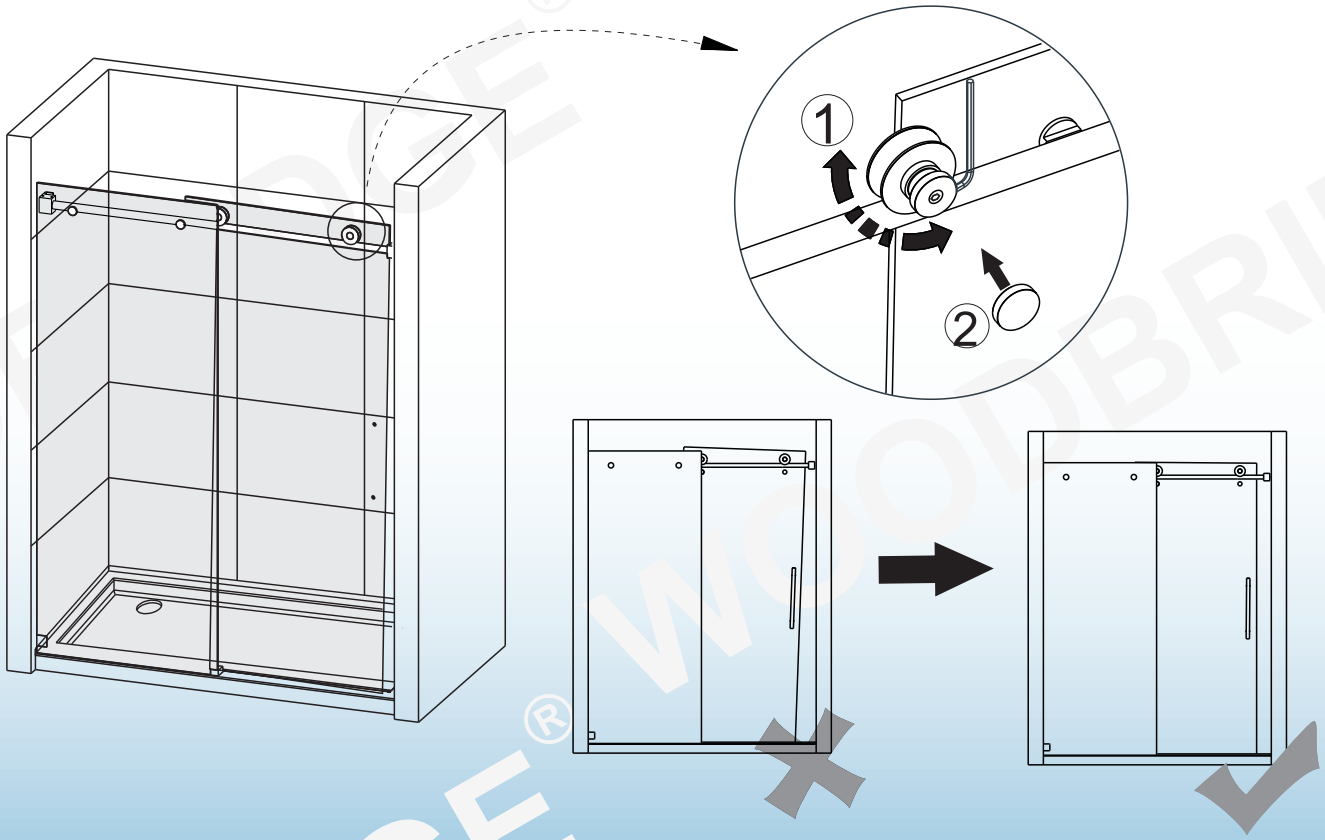

STEP 11

Adjust the shower base if needed. Ensure the shower base is level and the walls are plumb.

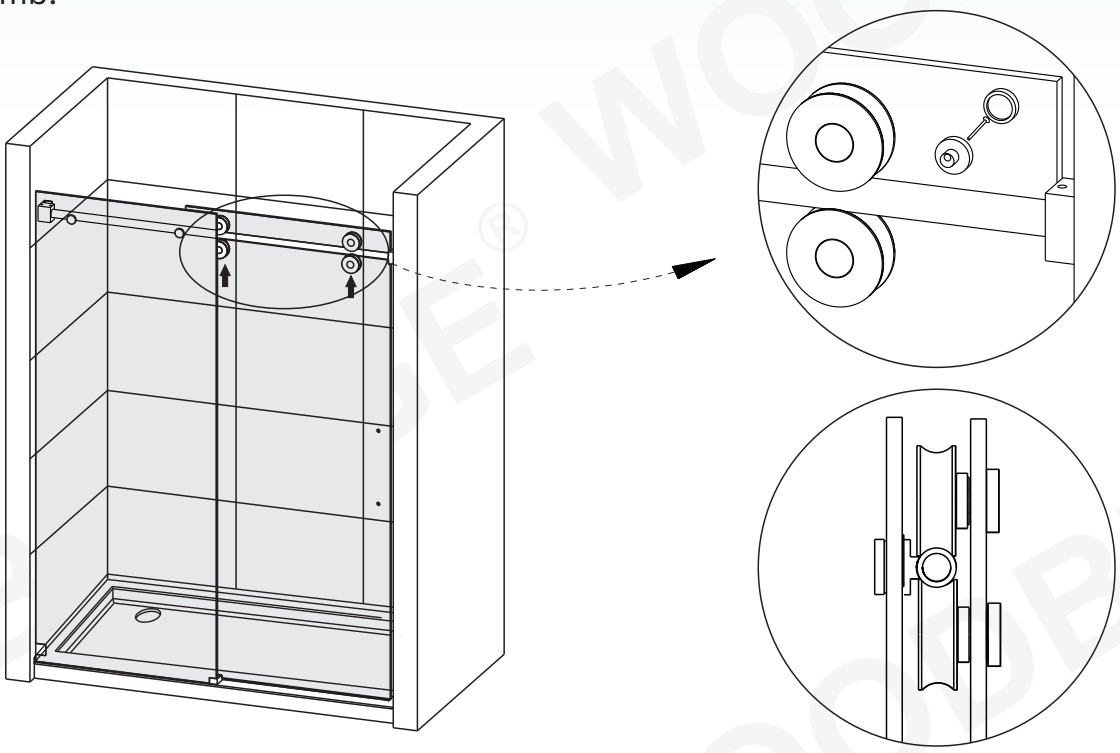

STEP 12

1. Adjust the shower base if needed. Ensure the shower base is level and the walls are plumb.

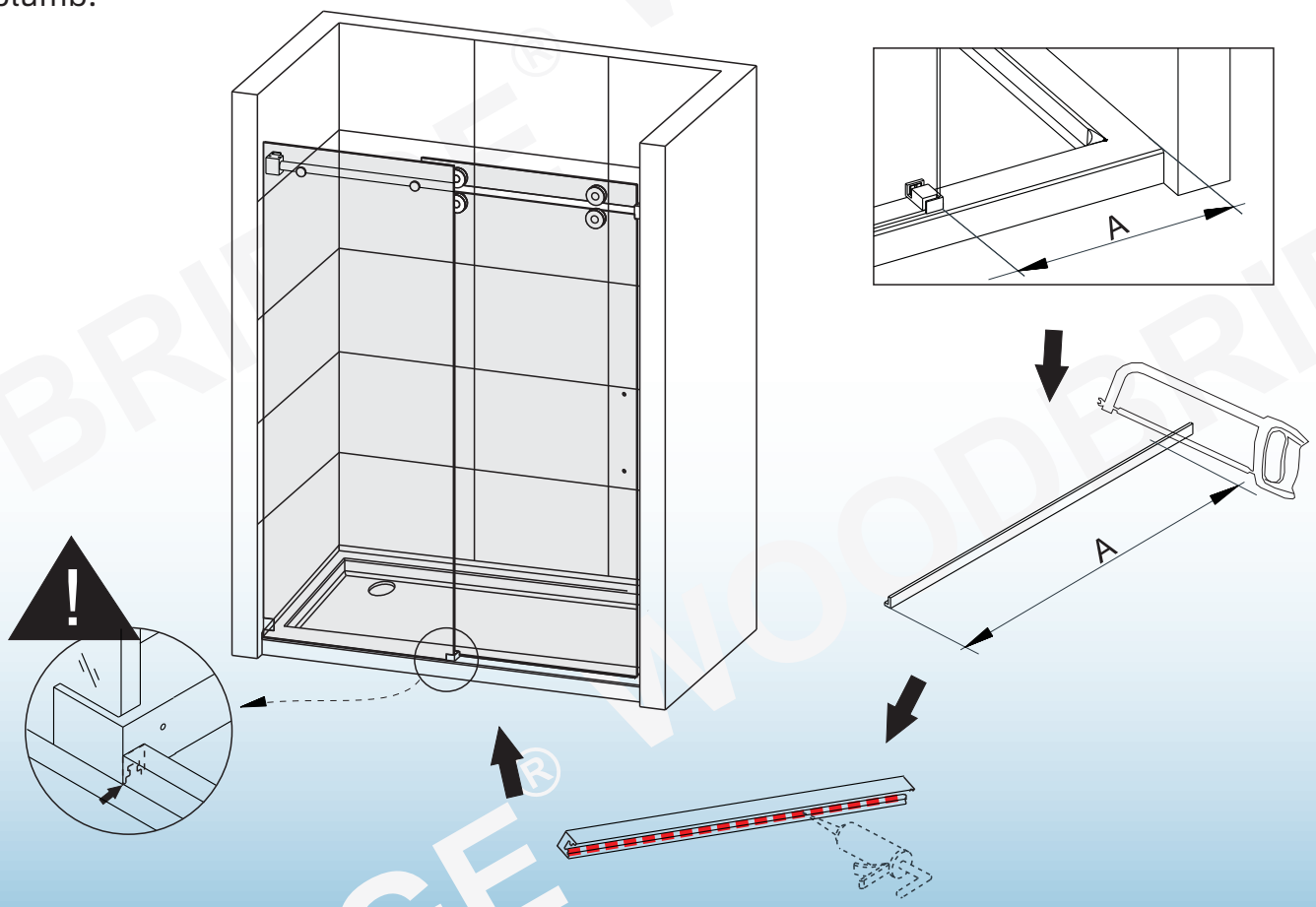

STEP 13

Adjust the shower base if needed. Ensure the shower base is level and the walls are plumb.

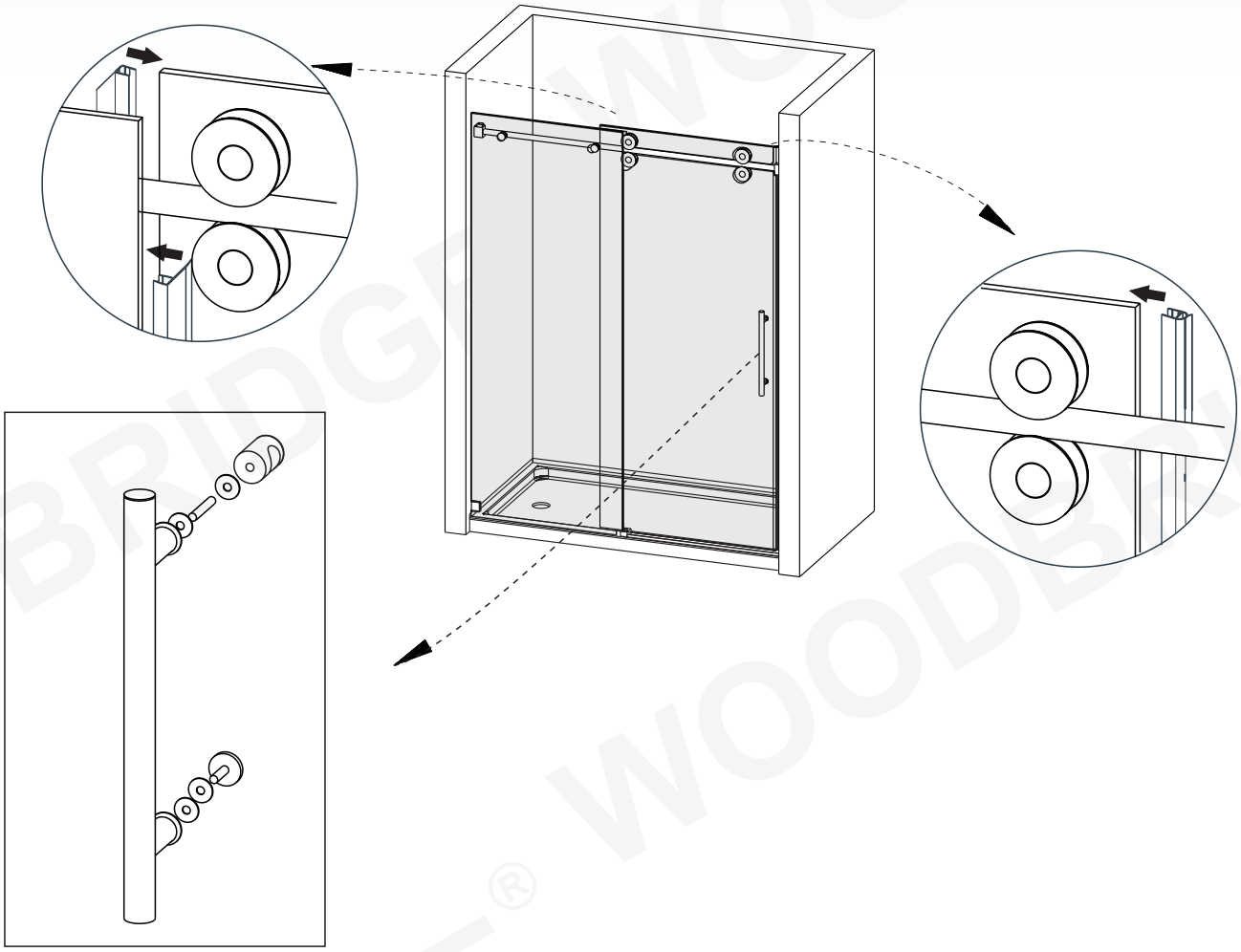

STEP 14

apply glazing compound to seal and waterproof.

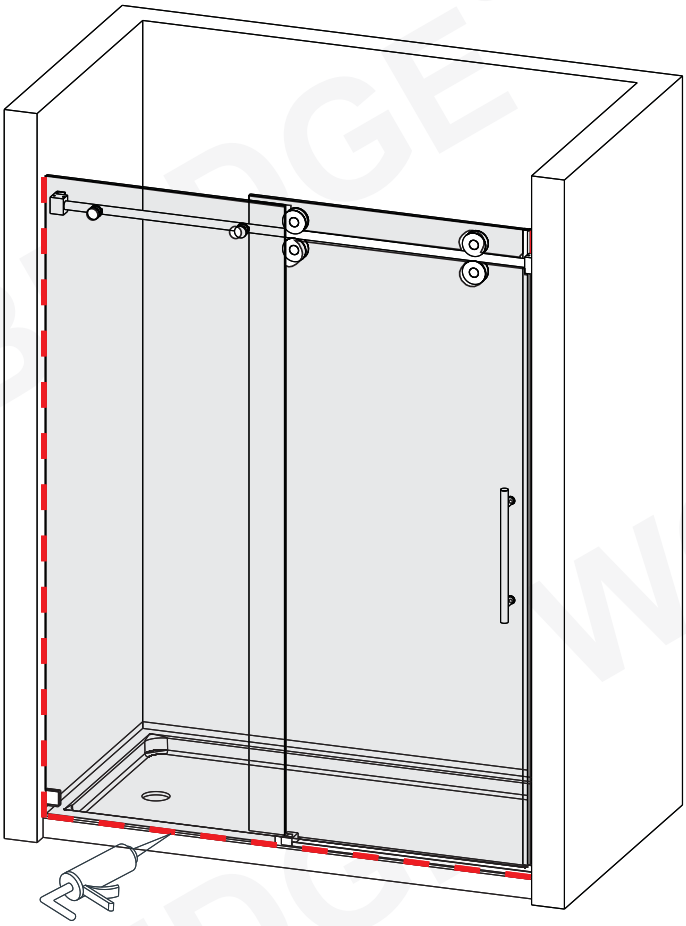

WOODBRIDGE®

WARRANTY

Woodbridge warrants the following products as listed below to be free from defects in material and workmanship, subject to the limitations set forth in this limited warranty.

- Bathtub, Whirlpool/Air Bubble Massage Tub, Cold Plunge, Wooden Tub: 1 Year limited to be free of defects in material and workmanship.
- Sauna room and Sauna Tent: 1 Year limited to be free of defects in material and workmanship.
- Toilet and Bidet: 1 Year limited to be free of defects in material and workmanship.
- Faucet: 1 Year limited to be free of defects in material and workmanship.
- Vanity and Vanity Top: 1 Year limited to be free of defects in material and workmanship.
- Granite, Marble, Engineered Quartz Vanity Top: 1 Year limited to be free of defects in material and workmanship.
- Medicine Cabinet, LED Mirror: 1 Year limited to be free of defects in material and workmanship.
- Stainless Steel Sink: 1 Year limited to be free of defects in material and workmanship.
- Solid Surface Shower Wall Panel, SMC Shower Base: 10 Years limited warranty to be free from material defects.
- Drain Cover and PVC Drain: 1 Year limited to be free of defects in material and workmanship.
- Shower Door: Lifetime warranty on glass components and 1 Year limited on other hardware.

This limited warranty is non-transferable and only applies to products purchased and installed in the United States and Canada

This limited warranty excludes all industrial, commercial and business usage. Proof of purchase (original sales receipt) from the original purchaser, Description and pictures of defect, model number or model description must be provided to Woodbridge Bath for all warranty claims and Woodbridge Bath IS NOT responsible for labor cost, removal or installation costs.

This limited warranty shall not apply to goods which have been subject to accident, negligence, improper installation, product abuse, product misuse, or use of cleaners containing abrasives, alcohol or other organic solvents, whether performed by a contractor, service company, or yourself, are excluded from this warranty.

This warranty does not cover surface damage caused by use of chemicals that break through or dissolve the surface finish or damage caused by the accidental dropping of sharp or heavy objects. Improper care and use of abrasive cleaners will void the warranty.

During this limited warranty period if a malfunction occurs and after inspection it is determined that a defect developed during normal use, Woodbridge reserves the right to take any of the following actions at its discretion:

(1) repair or replace the defective part(s) or product(s) at cost

(2) issue a refund of the original purchase price of the product(s) (Valid within 30 days from the date of purchase)

(3) issue a credit to be applied toward the purchase of a new product. Shipping or delivery charges may apply. Whether such charges are required, and the amount and conditions under which they apply, shall be determined solely at the discretion of Woodbridge.

Caution:
NEVER use cleaners containing abrasives, ammonia, bleach, acids, waxes, alcohol, solvents or other products not recommended for chrome finishes. Doing so will void the warranty.
Woodbridge strongly recommends installation by a licensed and insured professional to ensure proper performance and safety.

RESPONSIBILITIES OF OTHERS

Inspecting the unit prior to installation is the responsibility of the installer or building contractor who acts on behalf of the user. They are responsible for ensuring the unit is free of defect or damage. Notices are placed on the unit and on the shipping carton advising the installer of this responsibility. In the event of a problem, the unit must not be installed. Woodbridge is not responsible for failures or damage that could have been discovered, repaired, or avoided by proper inspection and testing prior to installation.

Damage occurring in transit is the responsibility of the carrier. The user or installer MUST open the crate and inspect the unit for damage when it is delivered. If damage is discovered, it must be reported immediately to the seller and the carrier in writing, and an inspection requested. Failure of the carrier to respond should be reported to the seller and the carrier. Your freight claims should be filed promptly thereafter.

This limited warranty does not cover any liability for consequential or incidental damages, all of which are hereby expressly disclaimed, or the extension beyond the duration of this limited warranty of any implied limited warranties, including those of merchantability or fitness for an intended purpose.

DISCLAIMER

Except as expressly provided, there shall be no warranty or obligation, express or implied, oral or statutory. No dealer or other person has the authority to make any warranties or representations concerning or its products. In no event shall be held responsible for any such warranties or representations.

Some states/provinces do not allow limitations on how long an implied warranty lasts, or the exclusion or limitation of special, incidental or consequential damages, so these limitations and exclusions may not apply to you. This warranty gives you specific legal rights, you may also have other rights which vary from state/province to state/province.

To obtain warranty and replacement parts, please send e-mail to help@woodbridgebath.com with the original receipt information, Woodbridge will determine whether to repair or replace your product, issue a refund or issue a credit.

IMPORTANT!

DO NOT USE: Abrasive cleaners such as: acid, ammonia, bleach, and similar solutions. Use of such solutions may cause corrosion, finish peeling, and/or dull the surface.

DO NOT USE: Abrasive sponges or cloths. Never use steel, wool, or wire brushes that will permanently scratch the surface.

Retain these installation instructions for future reference!

Thank you for using WOODBRIDGE products!

WOODBRIDGE®

California (Norwalk) Distribution Center
15600 Blackburn Ave, Norwalk, CA 90650

New Jersey (Somerset) Distribution Center
635 Pierce St, Somerset, NJ 08873

Florida (Orlando) Distribution Center
13645 S Orange Ave, Orlando, FL 32824

Canada (Ontario) Distribution Center
615 Orwell Street, Unit C, Mississauga, ON L5A2W4, Canada

SCAN ME

To Activate Warranty

Please don't hesitate to contact us if you have any questions or concerns.

Customer Service Phone: 562-229-0088. (Monday - Friday 9 AM - 5 PM Pacific Standard Time)
Or Email: help@woodbridgebath.com

NOTE