HULALA HOME

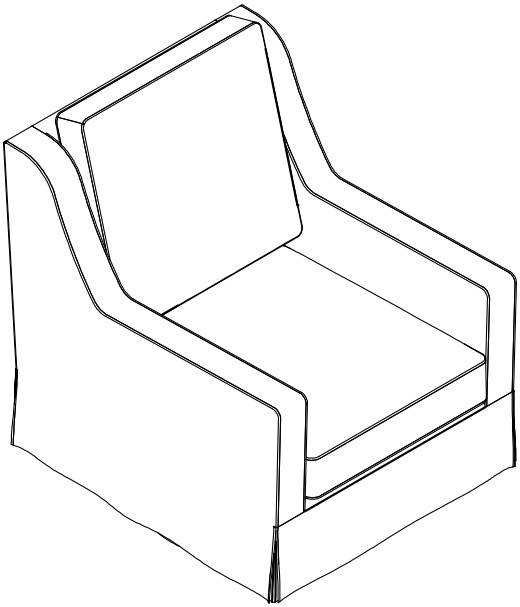

ITEM NO. CHDM1315

Weight Limitation
350 LBS

Installation:
10 minutes.

Two Person

Thank You For Choosing Our Furniture

If you have any questions or concerns, don't hesitate to reach out to us.

Contact us: +1(833)324-2464
Email: hello@hulalahome.com

NOTE:
This brochure contains IMPORTANT safety info. Please read and keep it for future reference.

MAINTENANCE AND WARNINGS



Before You Start

Please follow the steps below:

⚠ Check the packaging for any damage, deformation, or water stains. If there is significant damage, please contact us promptly.

⚠ Unpack the box and compare the contents with the parts list and hardware list to ensure all components and accessories are present and complete.

⚠ Please read the installation instructions carefully to understand the installation steps and precautions to ensure proper installation.

⚠ Clean the installation area in advance and ensure the ground is level and there is enough space to avoid damaging the furniture or making installation difficult.

⚠ Lay a protective mat on the ground to prevent scratching the floor during installation.

After-Sales Service

- If you encounter any issues or need technical support during use, please contact our after-sales team.We offer long-term maintenance and warranty services.



Precautions

⚠ This product is for indoor use only. Do not expose it to outdoor elements or high-humidity environments.

⚠ Keep the product away from high heat or open flames to prevent fire hazards.

⚠ Do not allow children to climb on the product, as this may cause tipping and result in personal injury.



Safety Warnings

⚠ If you notice any loose or damaged parts,stop using the product immediately and contact customer service.

⚠ Do not attempt to disassemble or replace any components yourself,as this may affect the stability and safety of the product.

Daily Maintenance

- Regularly clean the surface with a soft cloth to prevent dust accumulation.
- Do not use cleaning agents containing acids,alkalis,or corrosive substances, as they may damage the surface. It is recommended to use neutral cleaning agents or specialized furniture cleaners .
- Avoid exposing furniture to humid environments for extended periods . Use a dehumidifier or desiccant during humid weather.
- Avoid direct contact of furniture with water.If water is accidentally spilled, wipe it dry immediately.
- Avoid placing excessively heavy objects on the furniture: ensure the weight is within a reasonable load-bearing range.
- Avoid using sharp or rough items on the furniture surface to prevent scratches, Handle items gently when moving them .

Explosive view

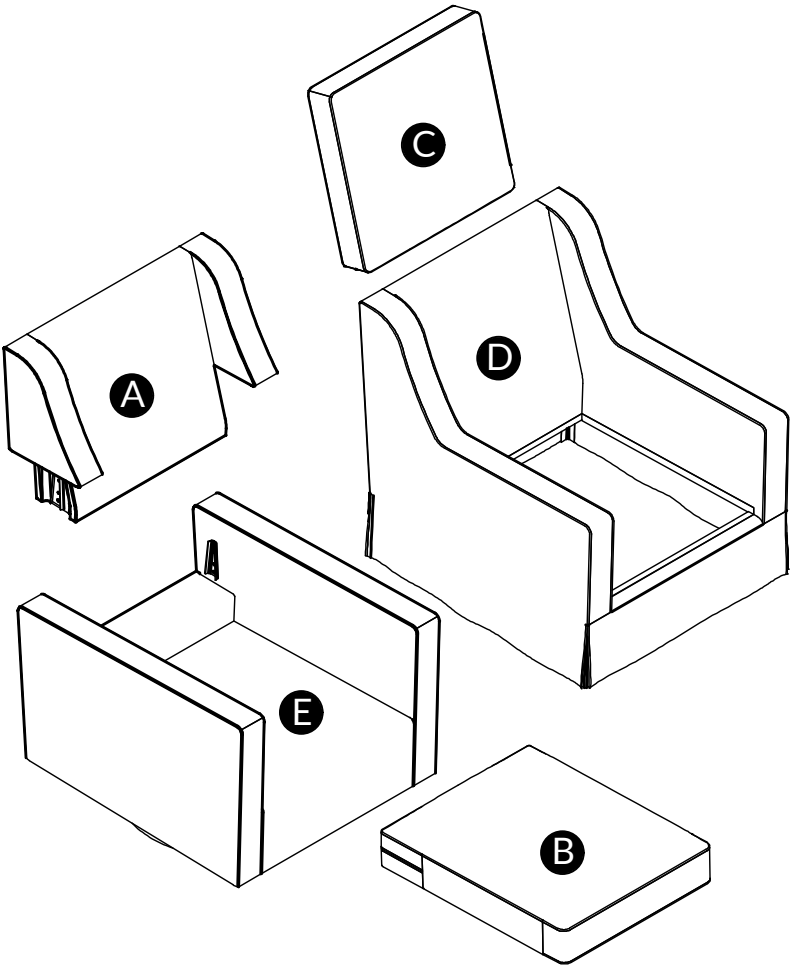

Parts List

A x 1 Back

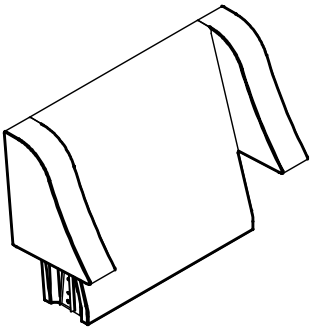

B x 1 Seat Cushion

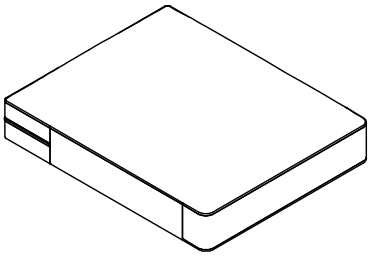

C x 1 Back Cushion

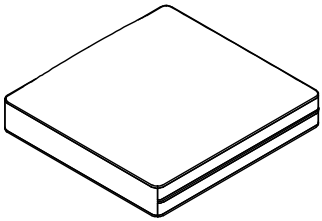

D x 1 Cover

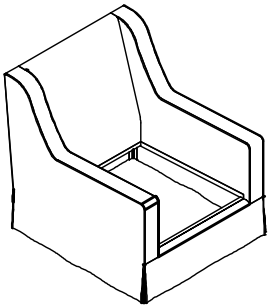

E x 1 Seat Frame

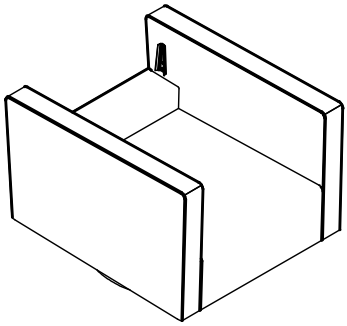

Step 1

Remove the tie-wraps on Seat Frame E.

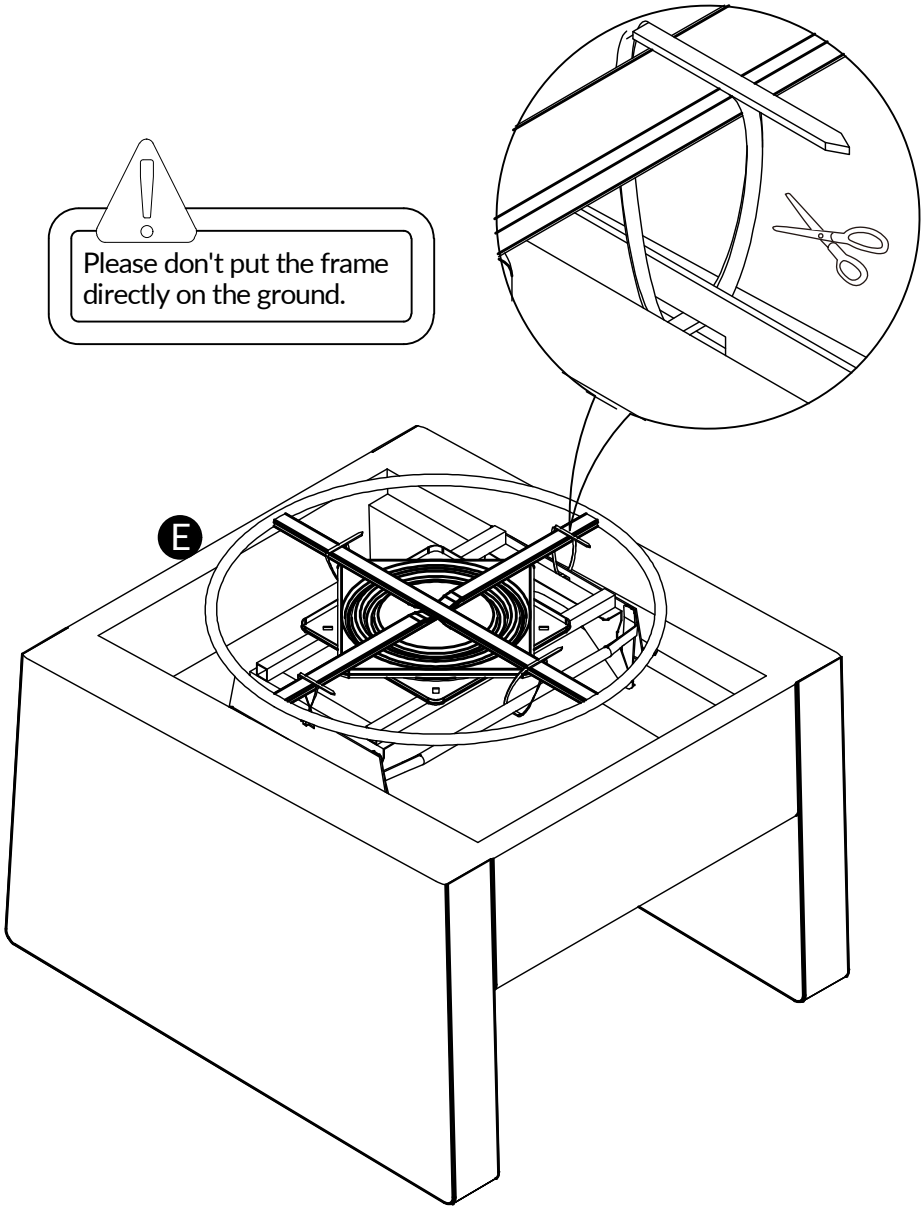

Step 2

Attach Back A to Seat Frame E by inserting the brackets on Back A onto the metal plate on Seat Frame E.
Push Back A with a downward force to secure it into place.

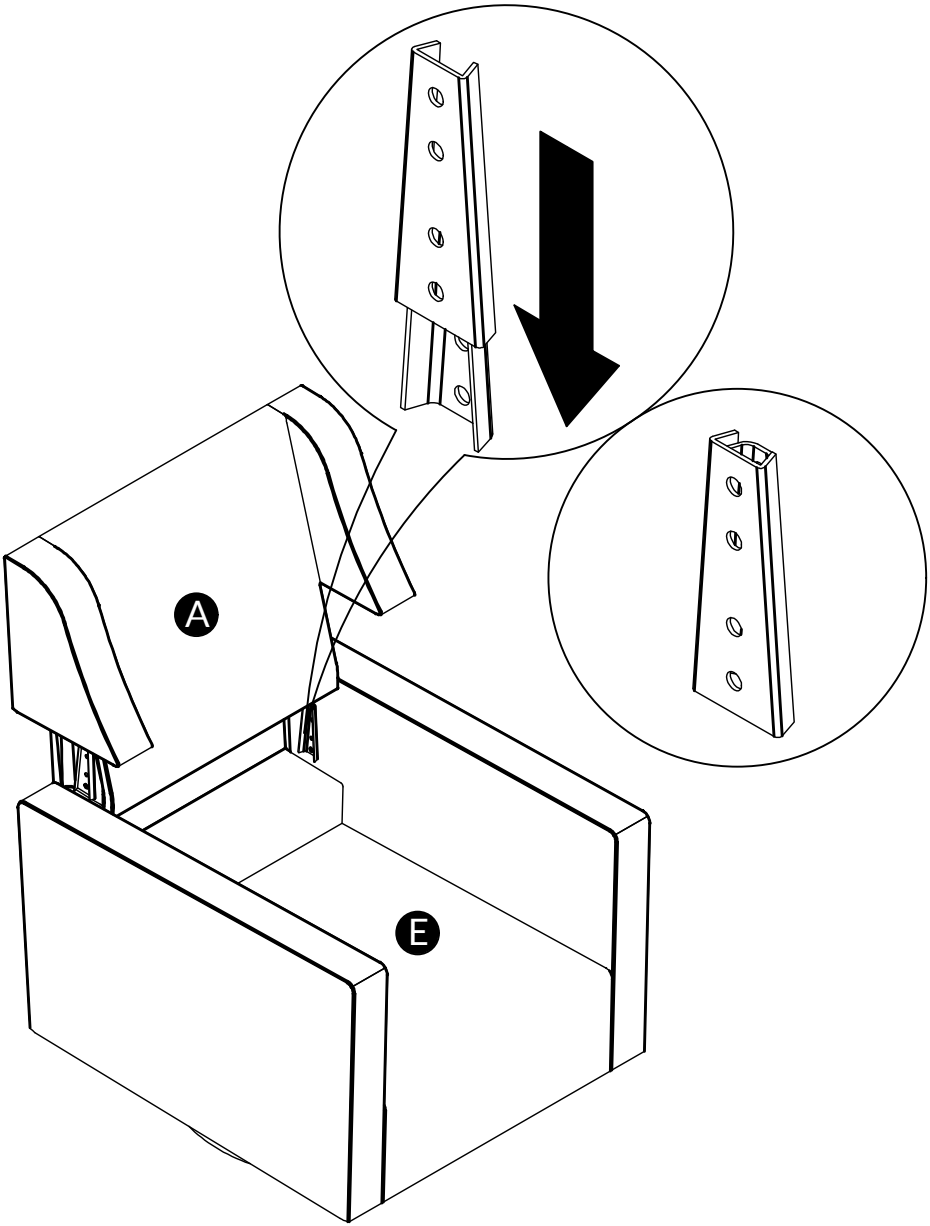

Step 3 Put the chair slipcover D on the chair using the Velcro strips.

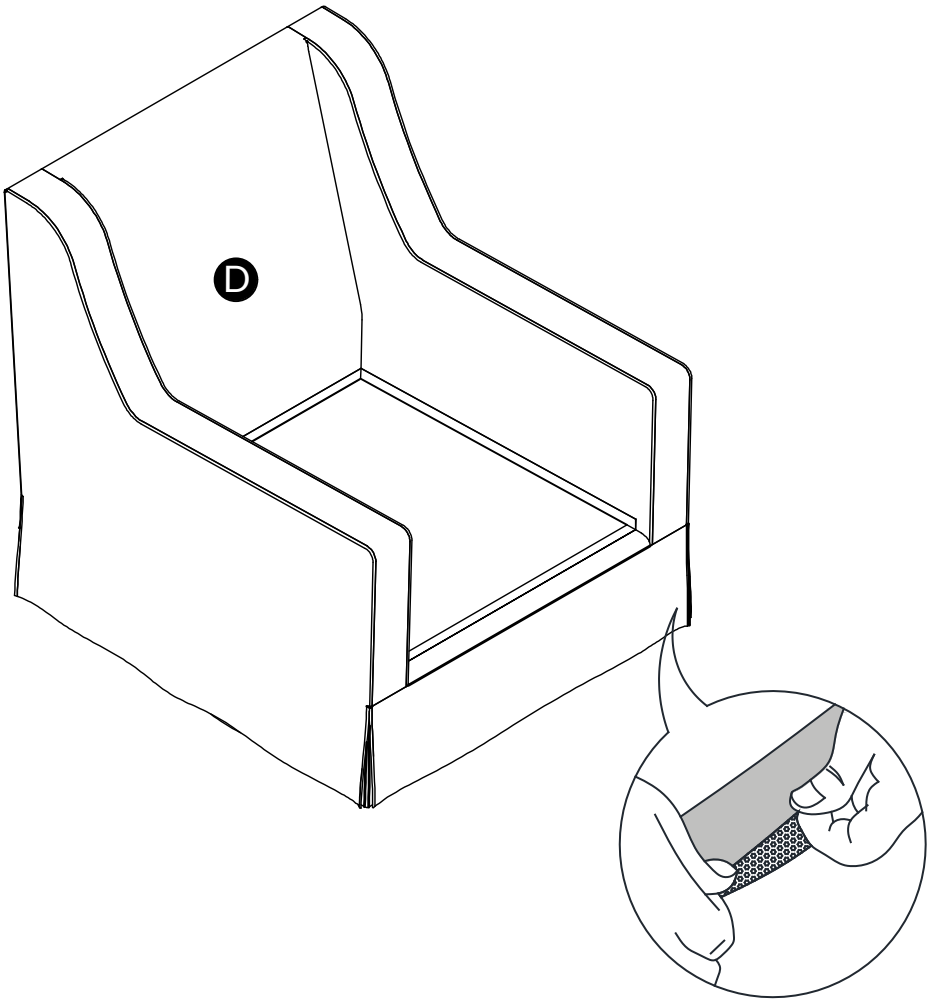

Step 4

Place Seat Cushion B and Back Cushion C onto the chair.

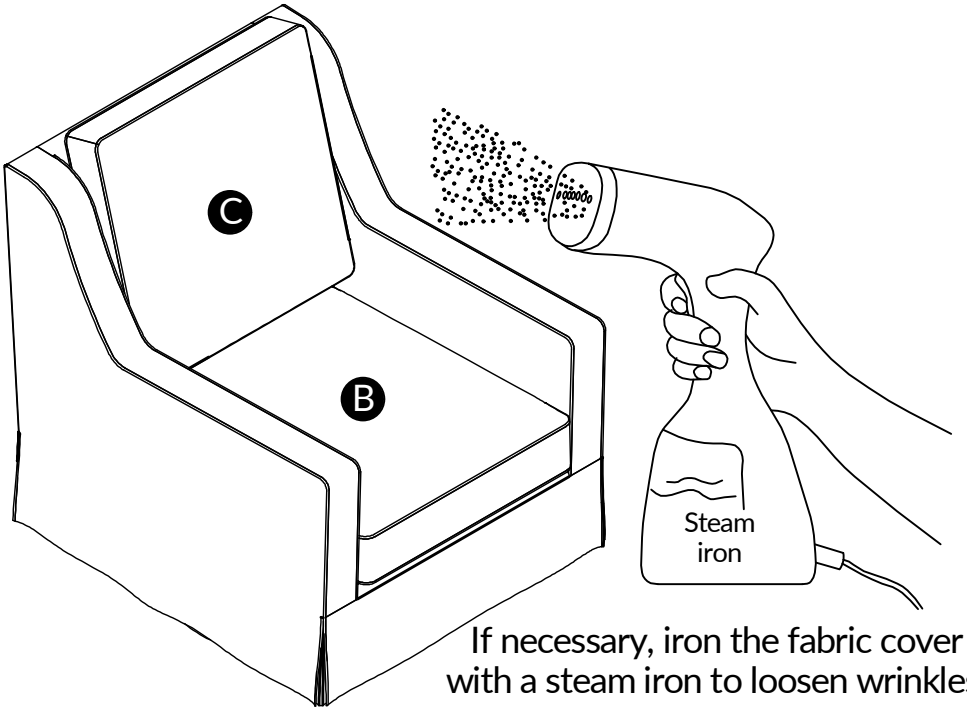

If necessary, iron the fabric cover with a steam iron to loosen wrinkles.

Step 5

You can swivel the chair.

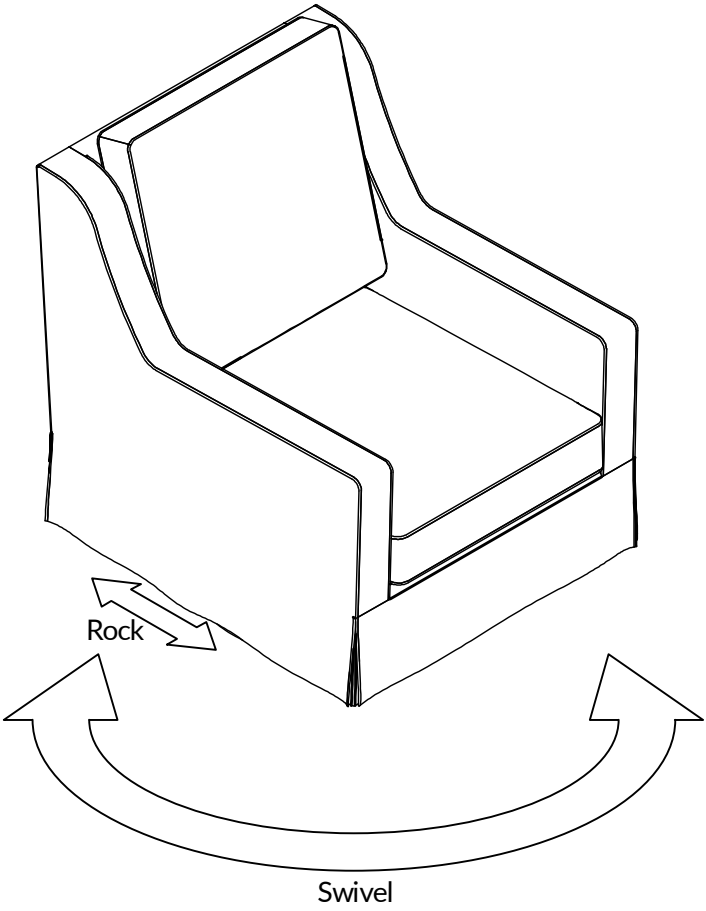

WARRANTY

- We strive to offer quality products, and we also try our best to satisfy every customer who orders from us with products or services as needed.

- Replacement parts can be purchased from our company if available.

- For returns, please check the return policy with the retailer or marketplace where you purchased the item.

Are you having difficulty

With assembly? Missing parts?
Please send an email with your order No. to
hello@hulalahome.com

We appreciate your purchase.
Brighten your life with our furniture!