ASSEMBLY INSTRUCTION MODEL NO:Chair

STEP 1

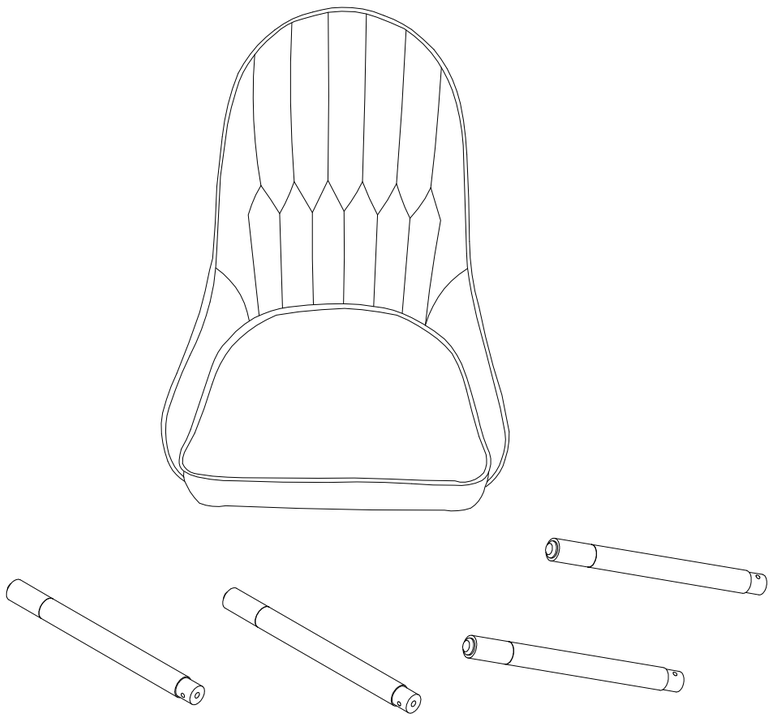

STEP 2

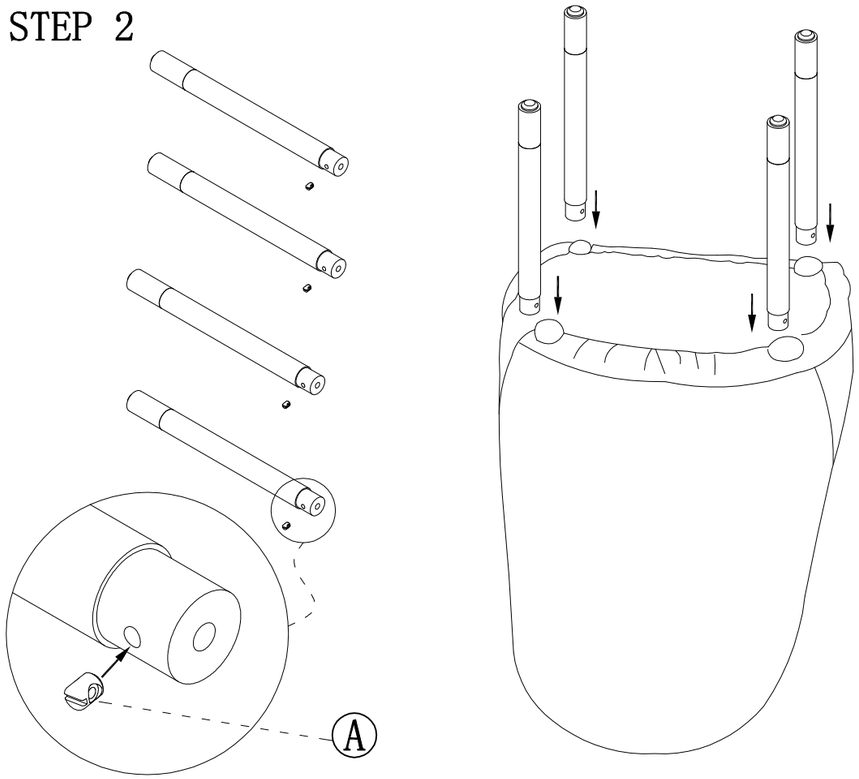

STEP 3

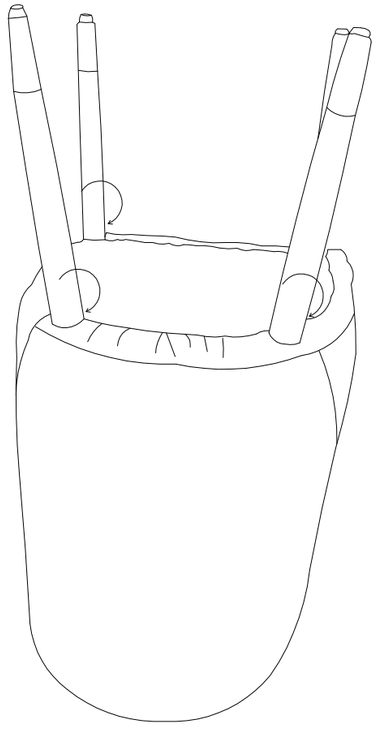

STEP 4

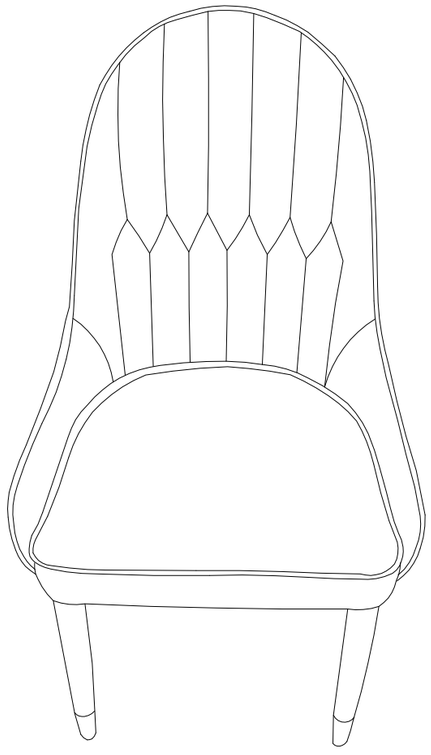

FITTINGS

NO:	PATTERN:	SIZE:	QTY:
A		M8×15	4