INSTALLATION & ASSEMBLY - BARSTOOL

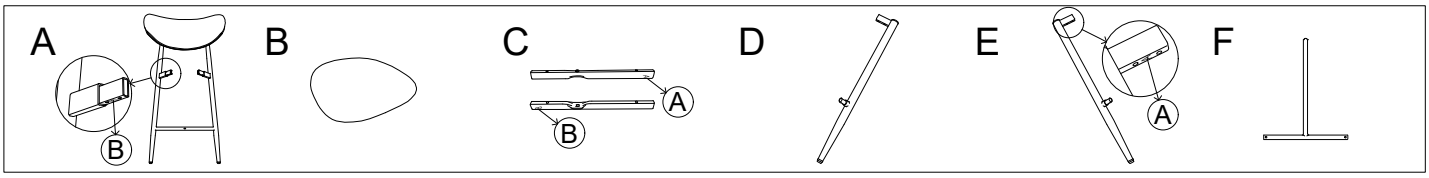

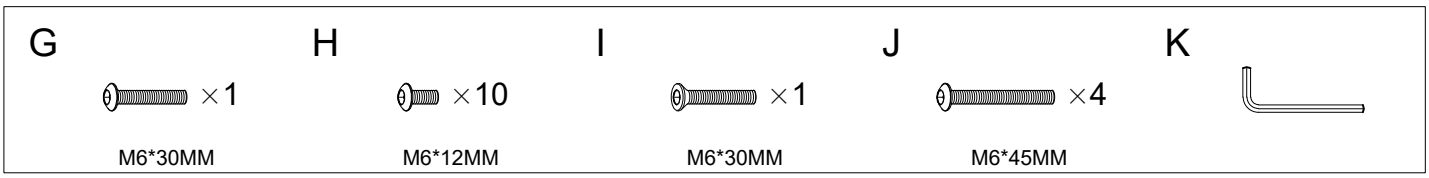

1

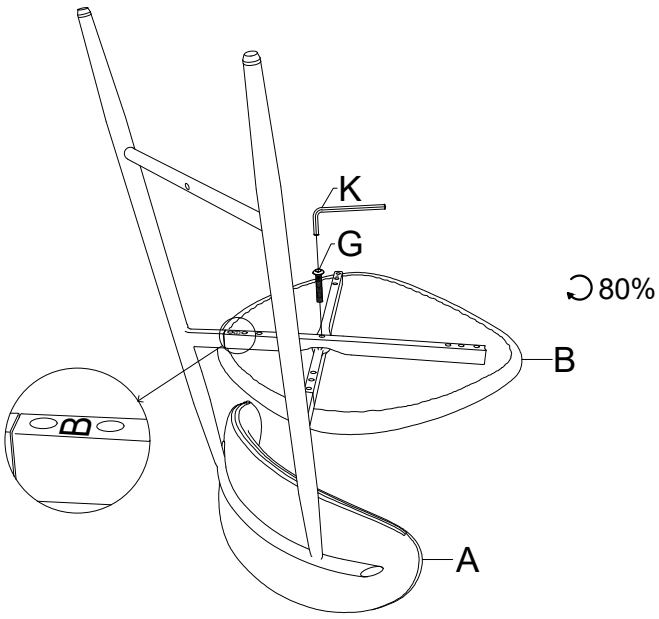

Step1：Lock the screw 80% at first, Remember take the rubber sleeves off before assembly.

2

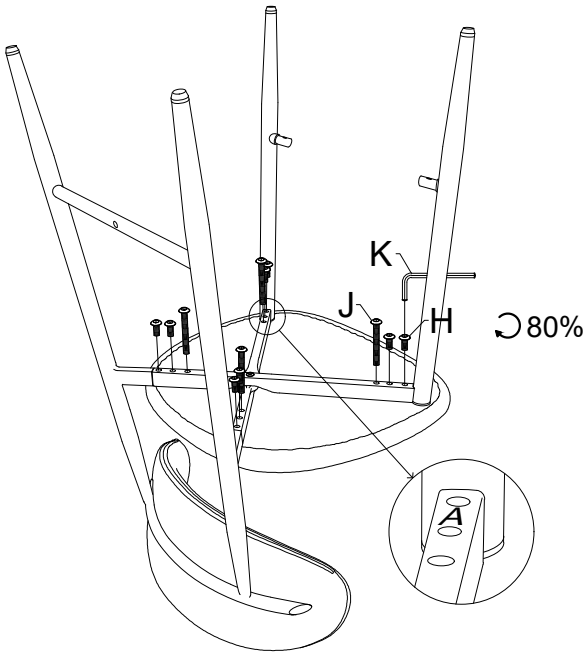

Step2：Lock the screw 80% at first.

3

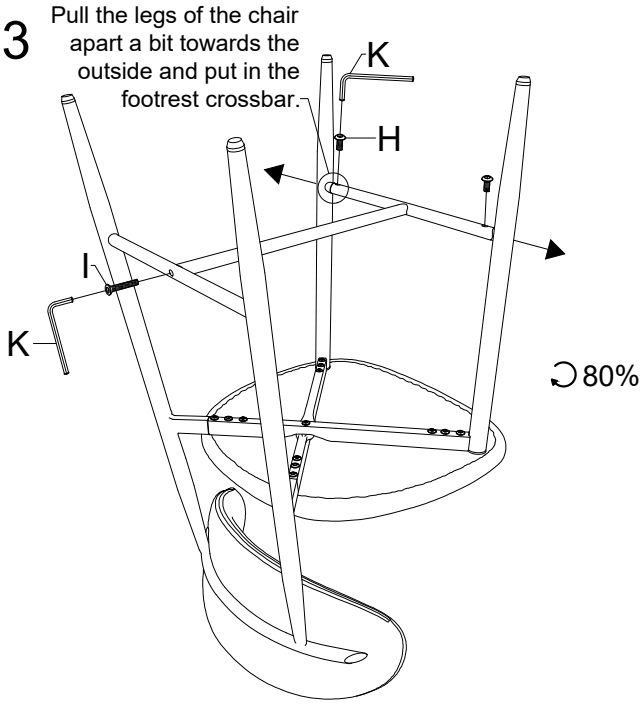

Step3：Lock the screw 80% at first.

Step4：120KG or adult seat in chair, make sure the chair is balance then tighten all the screws.

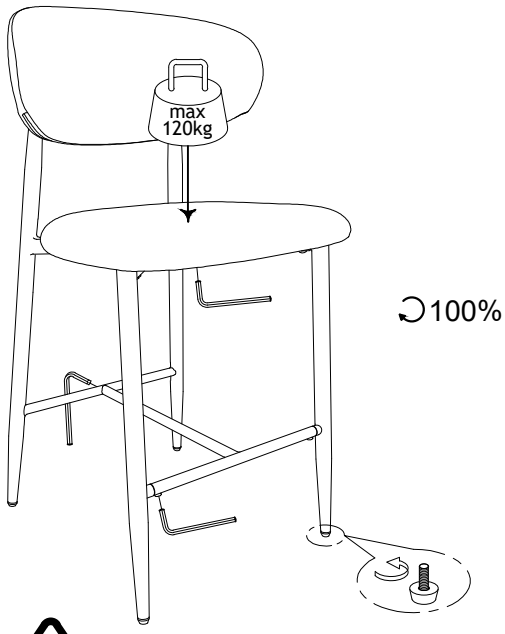

4

The foot cap is adjustable to help to balance the chair.