ASSEMBLY INSTRUCTIONS

ITEM : YUMIKO DINING CHAIR

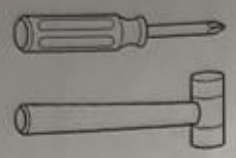

Not Provided

Part List :

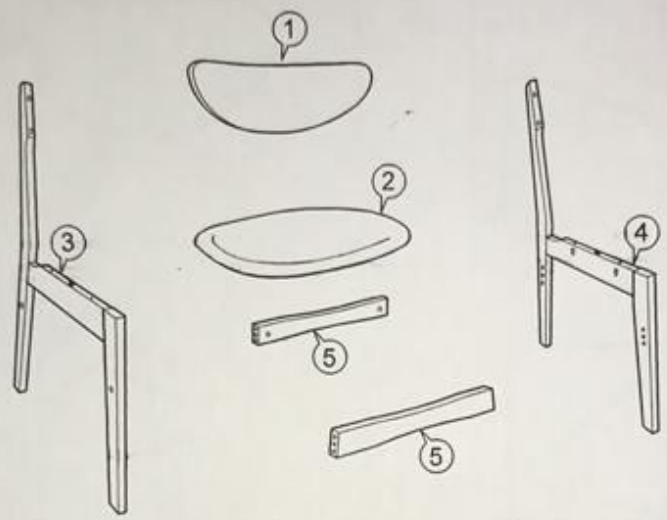

Hardware List

A	M7 x 25mm (Black) = 8	C	M4 x 25mm= 8	E	M8 x 30mm =20		
B	M6 x 50mm (Black) = 8	D	M6 x 13mm =8	F	M4 = 1		

1

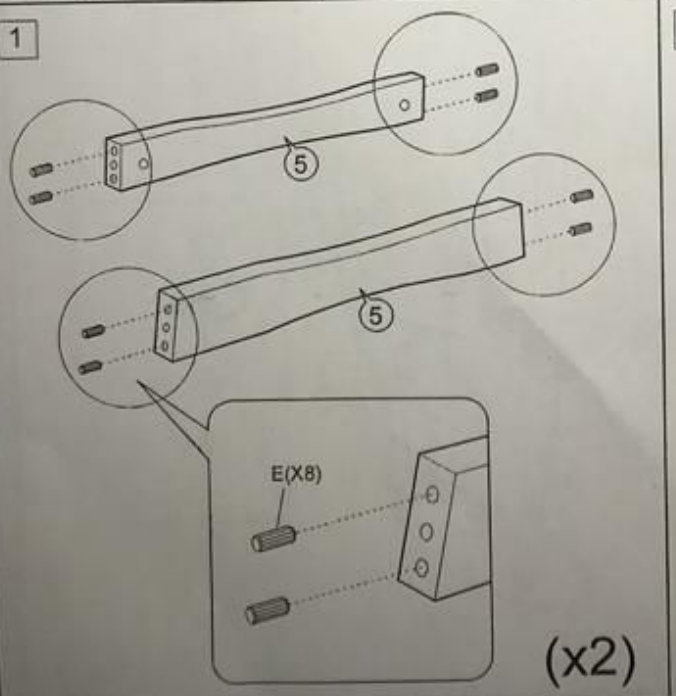

(x2)

2

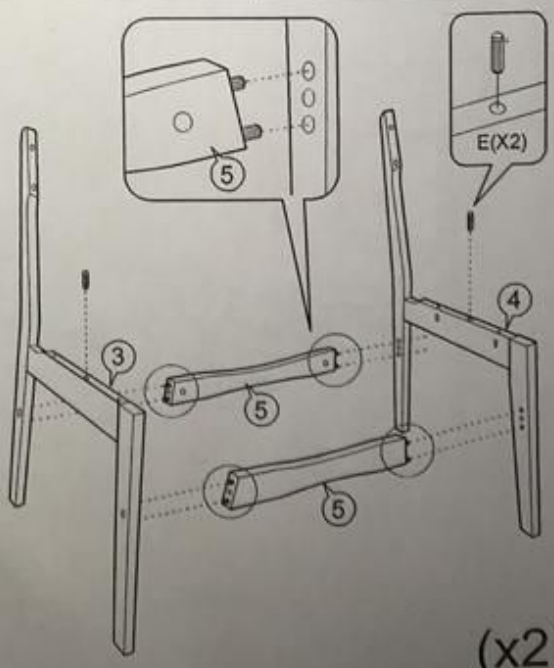

(x2)