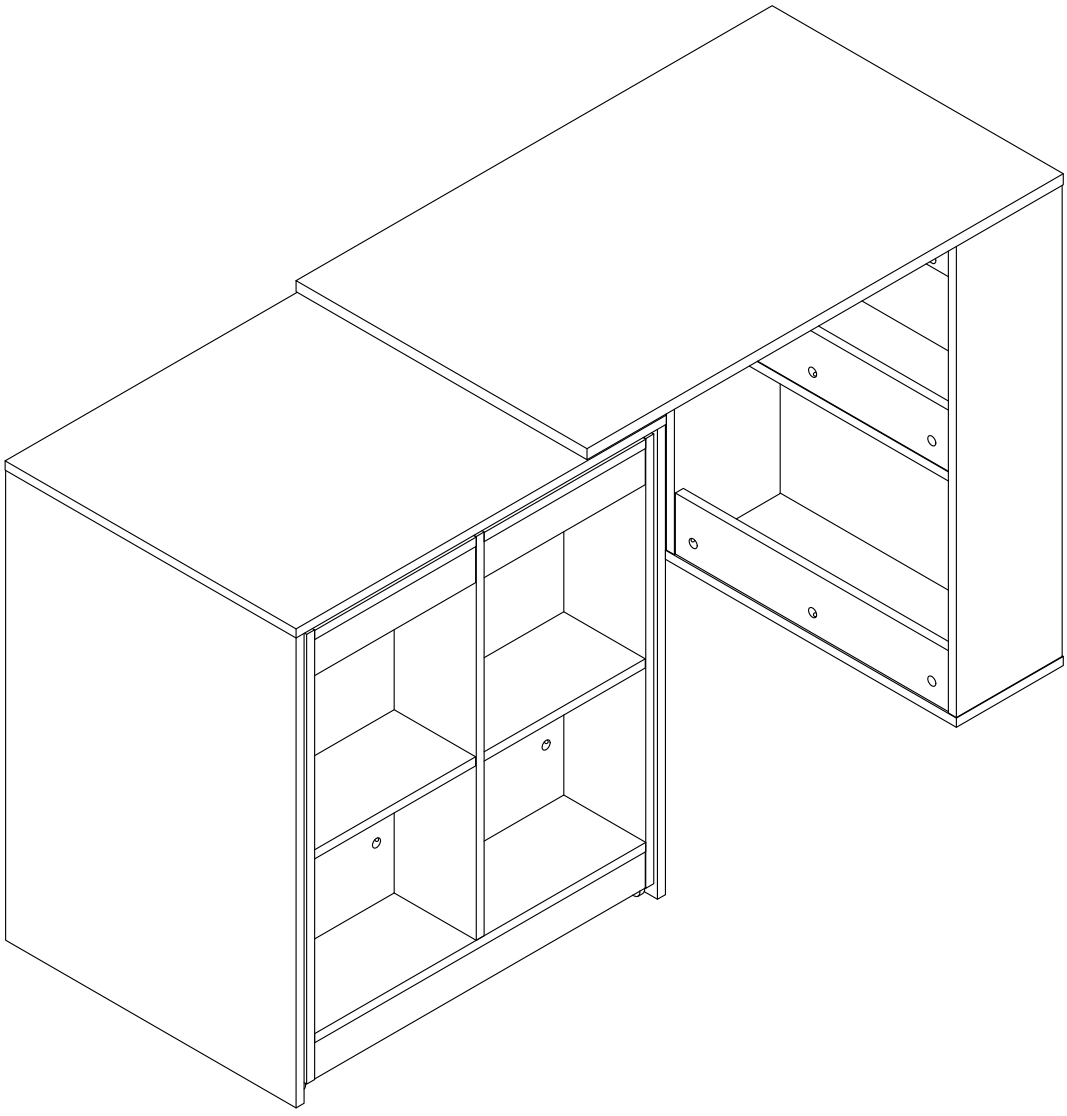

General Guidelines

- Please read the following instruction carefully and use the product accordingly.
- Please keep this manual and hand it over when you transfer the product.
- Please check that you have all the listed components and tools, before you start assembling the item.
- Assemble the item as close to its final position(in the same room) as possible.

Care and Maintanance

- The product is intended for indoor use only. The product must be assembled and used in accordance
- with the provisions of the manual.
- Avoid long-term exposure to humid environments to prevent mildew.
- Keep the product away from fire sources and high temperatures. Do not expose the product to direct sunlight.
- Do not place any hot objects on the surface of the product.

Warning ⚠

- Keep children and animals away from the work area, small parts could choke if swallowed.
- Children are not allowed to climb or stand on the product to avoid personal injury caused by the product tilting or tipping over.
- Please do not use the product if there is/are defective and/or missing part/s, as this can result in damage or injury.
- To avoid the potential dangers of suffocation, please keep all parts and packaging (film, plastic bags, foam, etc.) away from babies and children.

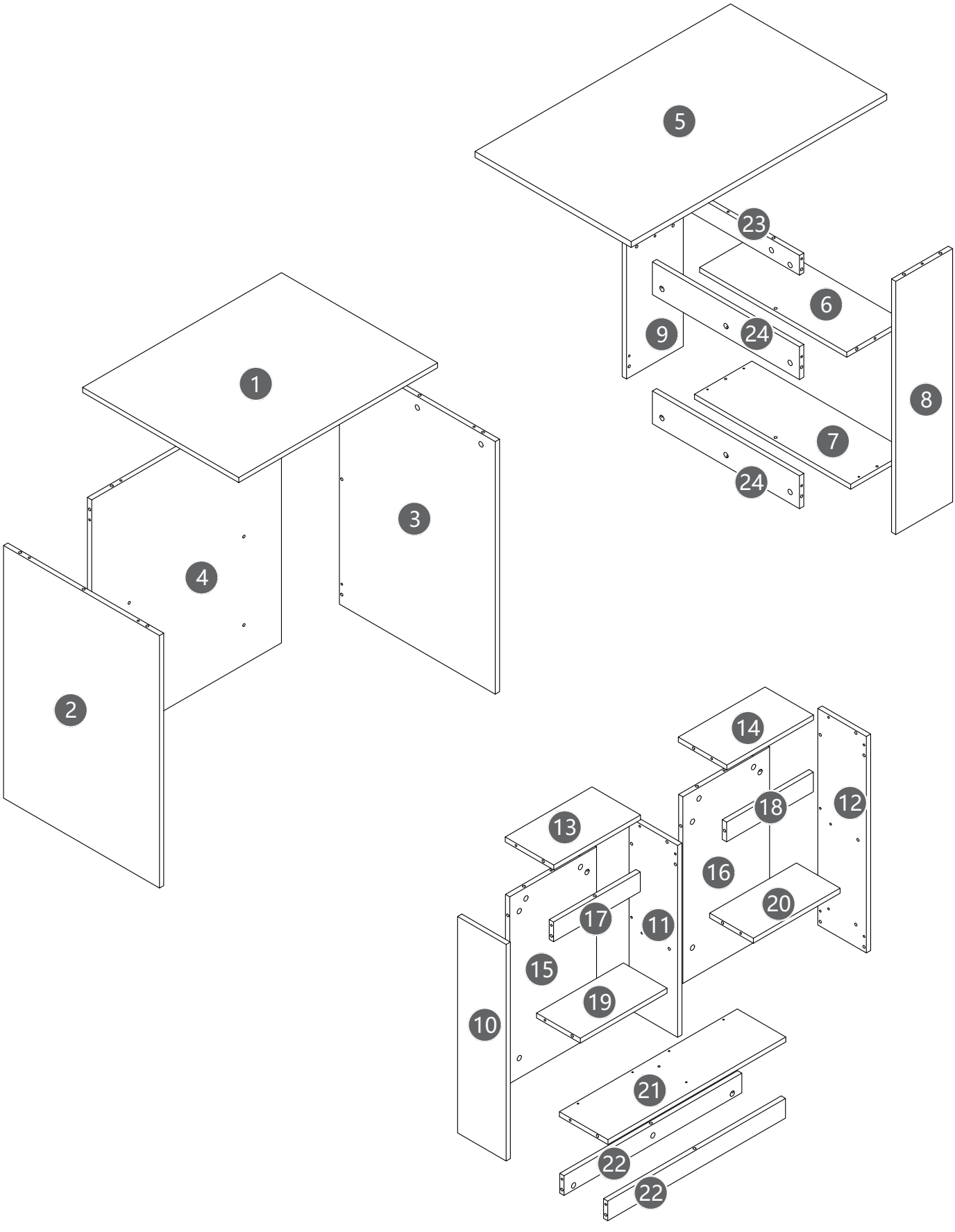
5
23
6
9
24
8
7
24
1
3
4
2
14
18
12
13
16
20
17
11
15
19
10
21
22
22

1 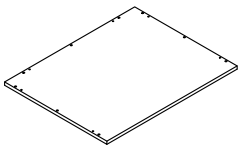 700*550(mm) 1PC	2 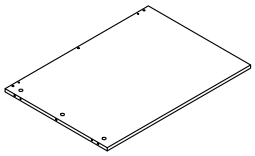 770*549(mm) 1PC	3 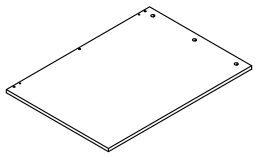 770*549(mm) 1PC	4 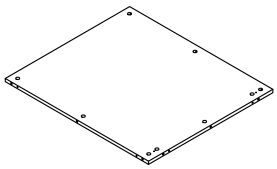 770*668(mm) 1PC	5 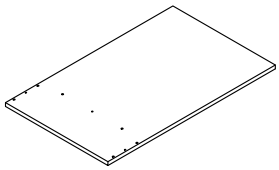 900*550(mm) 1PC
6 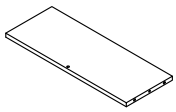 518*198(mm) 1PC	7 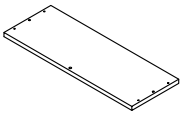 550*202(mm) 1PC	8 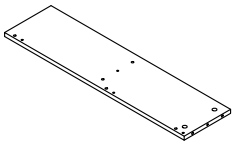 772*200(mm) 1PC	9 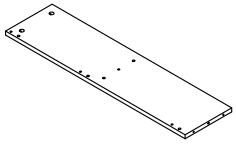 772*200(mm) 1PC	10 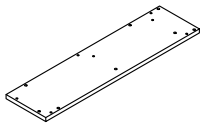 736*171(mm) 1PC
11 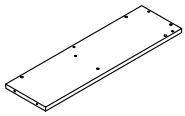 661*171(mm) 1PC	12 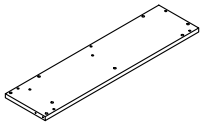 736*171(mm) 1PC	13 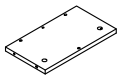 305.5*171(mm) 1PC	14 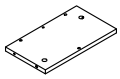 305.5*171(mm) 1PC	15 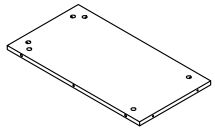 645*305.5(mm) 1PC
16 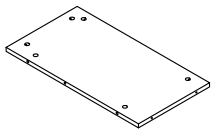 645*305.5(mm) 1PC	17  305.5*60(mm) 1PC	18  305.5*60(mm) 1PC	19 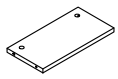 305.5*154(mm) 1PC	20 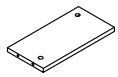 305.5*154(mm) 1PC
21 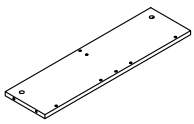 626*171(mm) 1PC	22 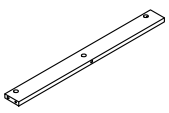 626*60(mm) 2PCS	23 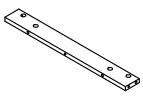 518*60(mm) 1PC	24 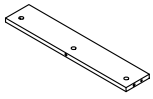 518*100(mm) 2PCS	

A 67x 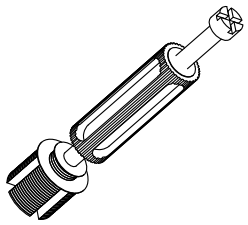	B 67x 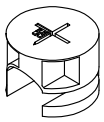 15*12	C 47x 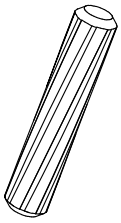 M8x40mm	D 9x 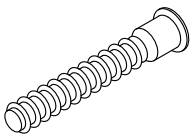 M7x50mm
E 8x 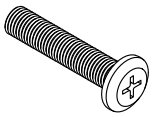	F 46x 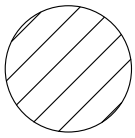	G 1x 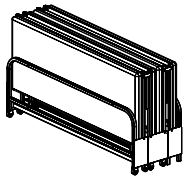	H 2x 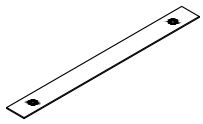
I 6x 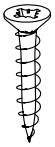 M3.5x14mm	J 2x 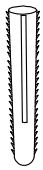 M8x40mm	K 2x 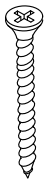 M4x50mm	L 2x 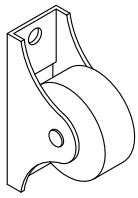
M 2x 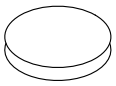			

Hardware installation demonstration

NOTE:Please make sure "A"hardware tightened and can't be pulled out!

I

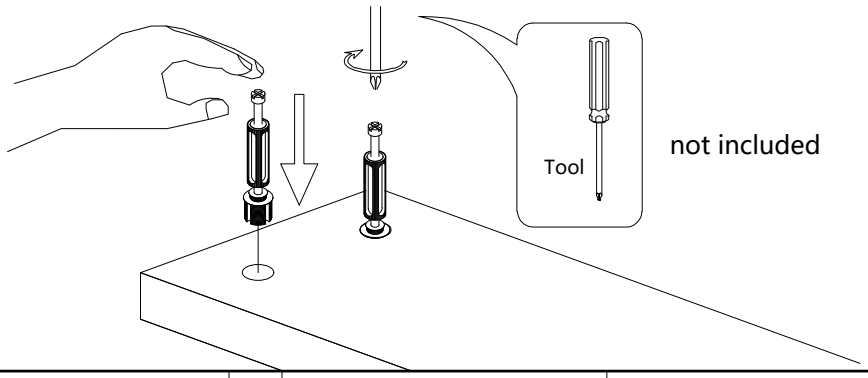

II

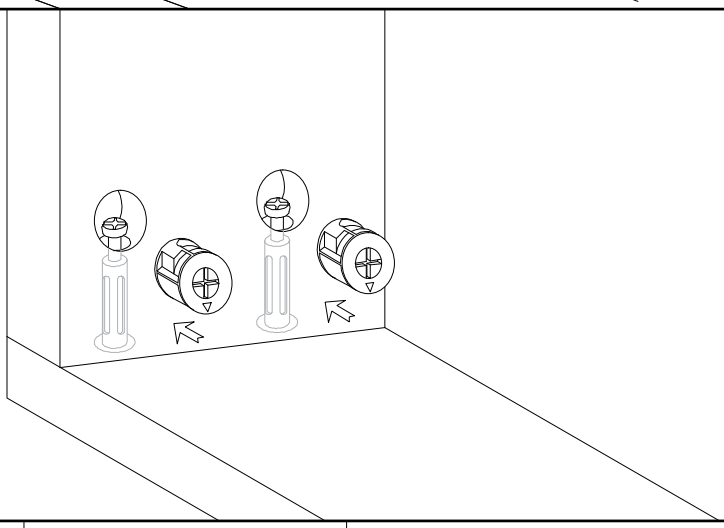

III

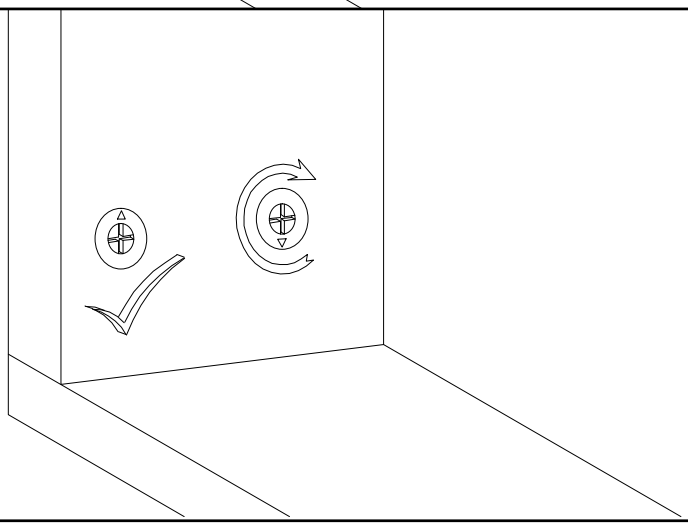

01

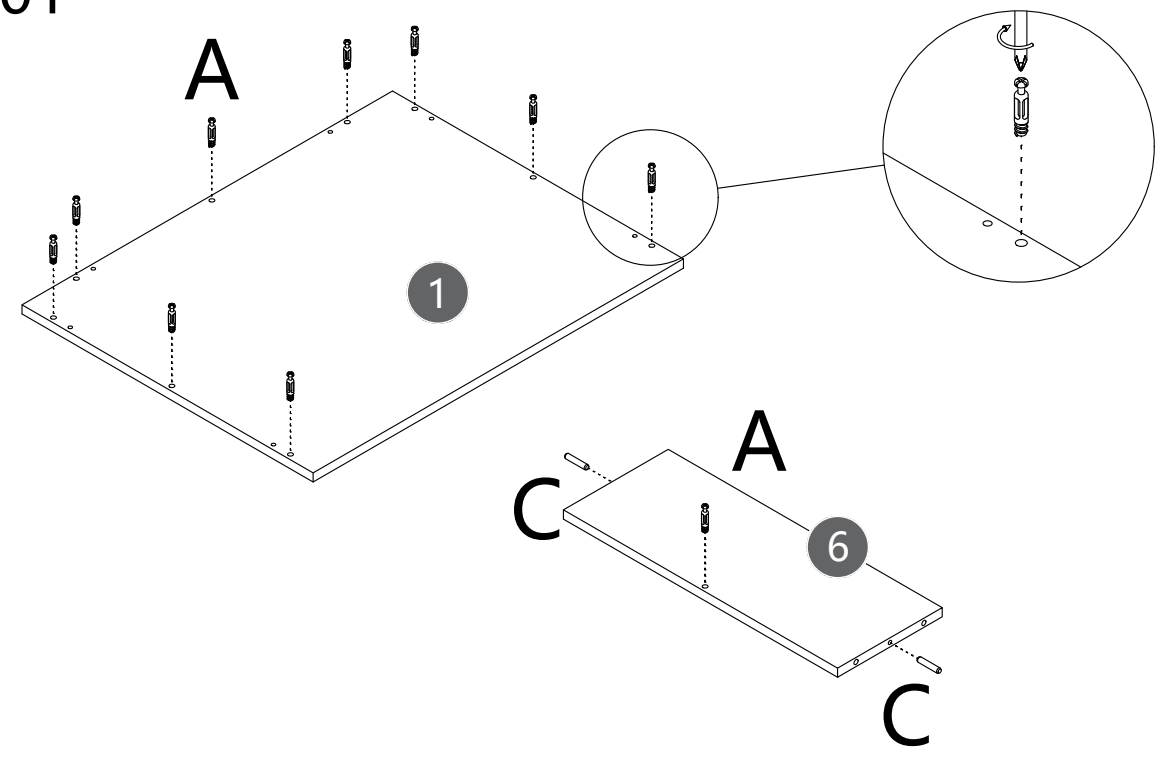

A 10x

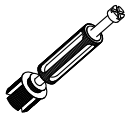

C 2x

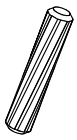

02

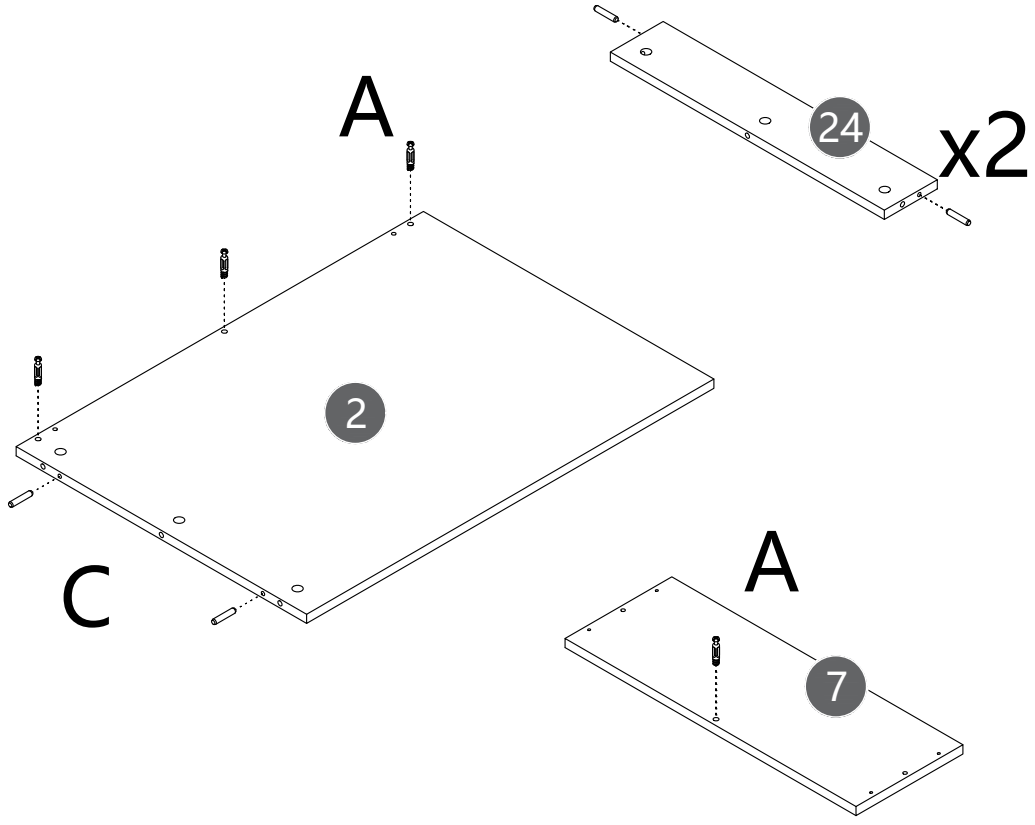

A 4x

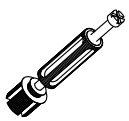

C 6x



03

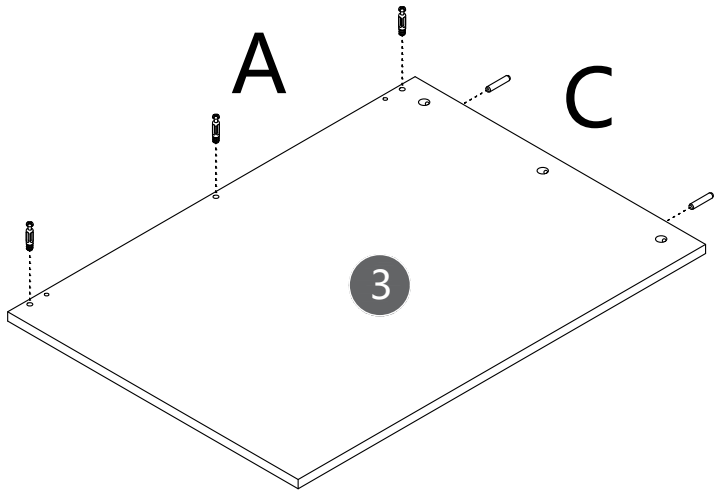

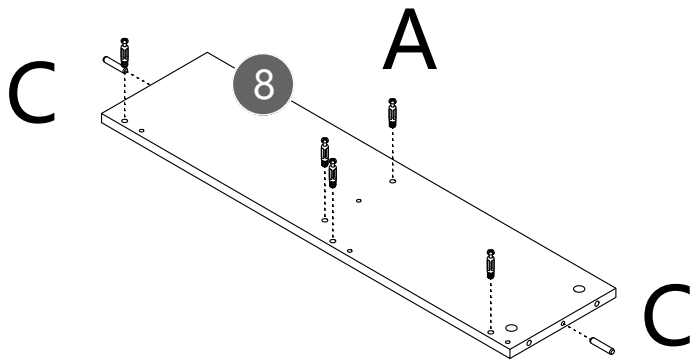

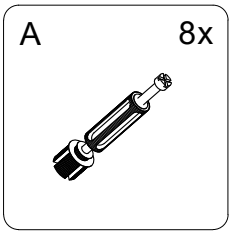

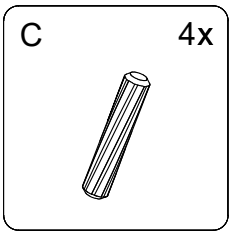

04

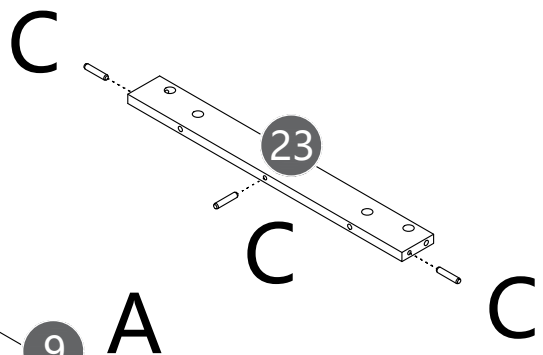

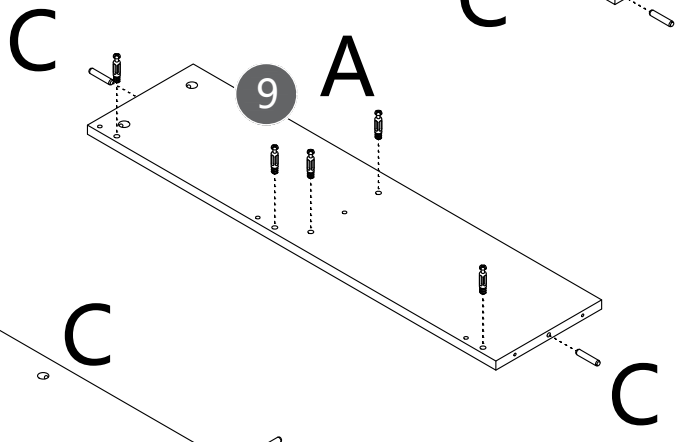

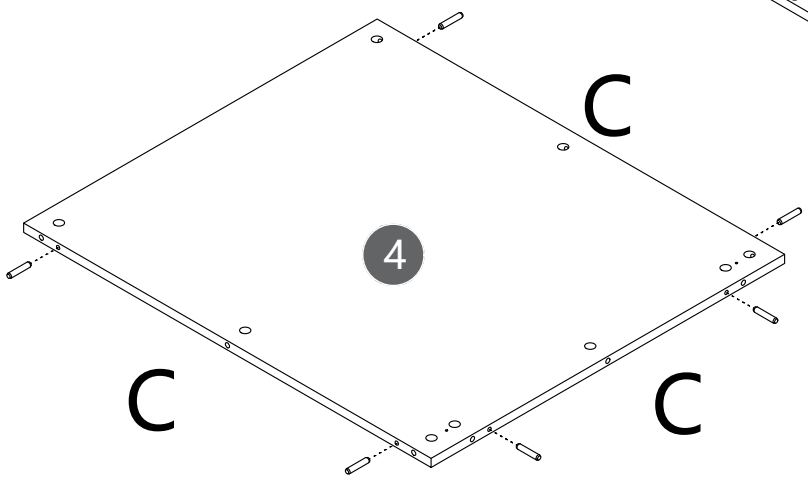

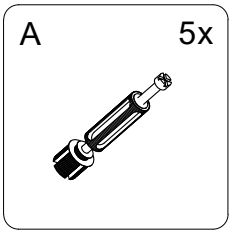

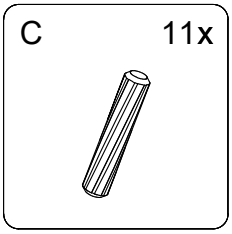

05

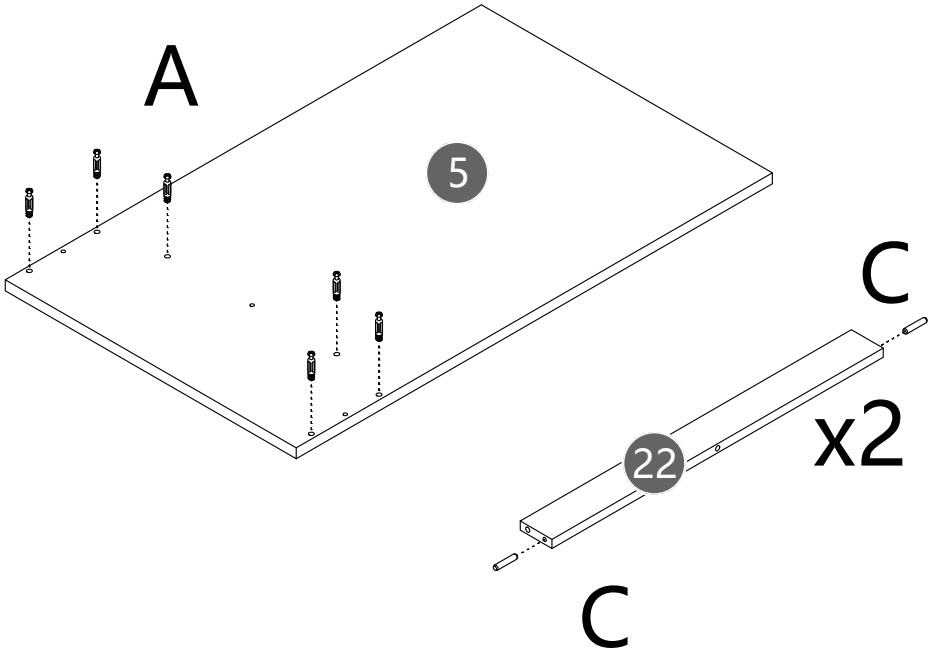

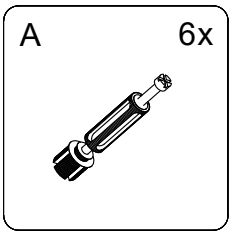

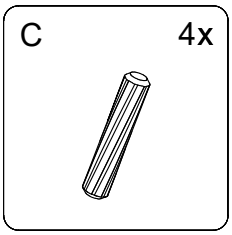

06

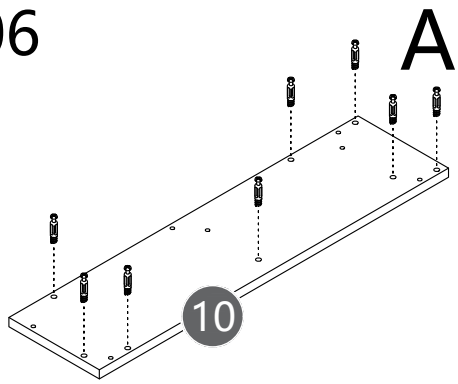

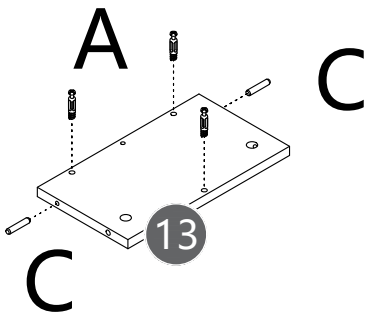

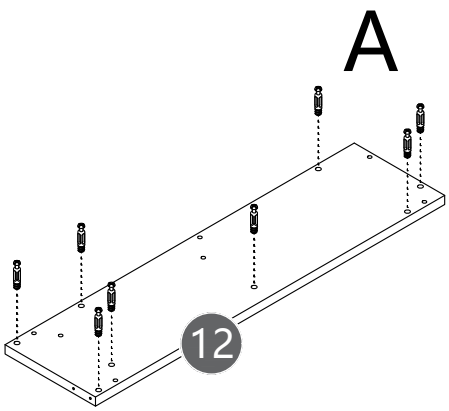

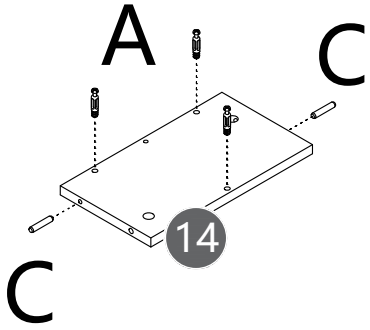

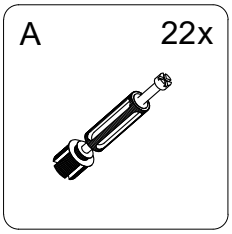

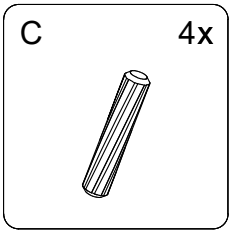

07

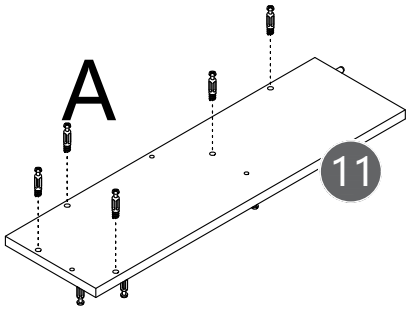

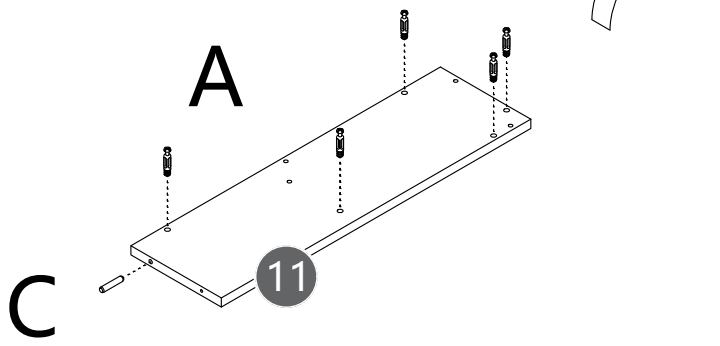

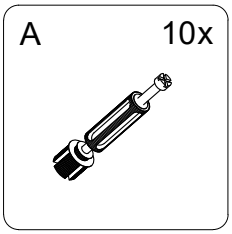

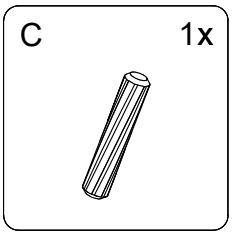

08

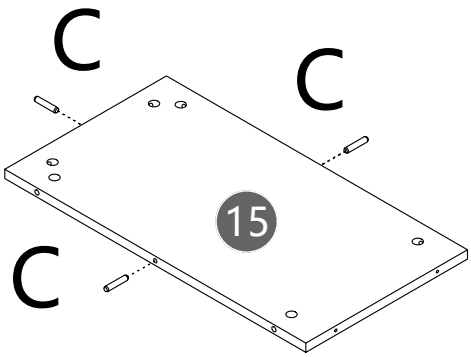

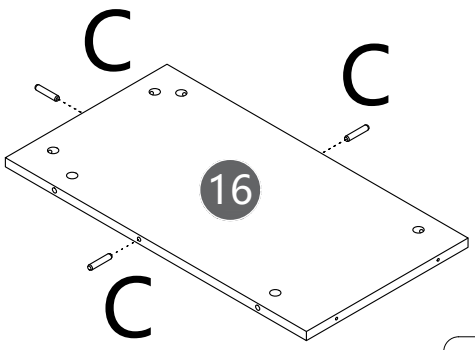

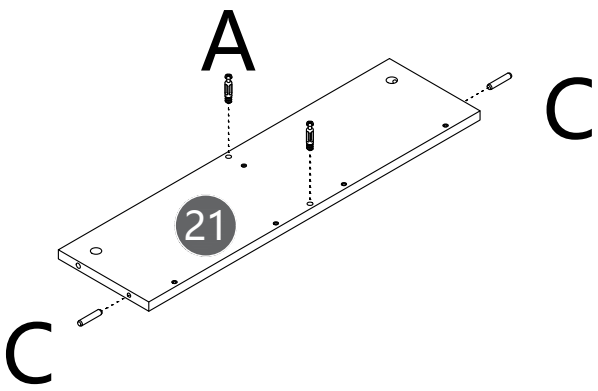

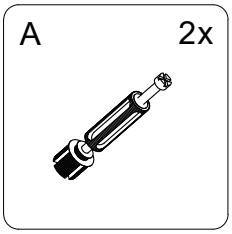

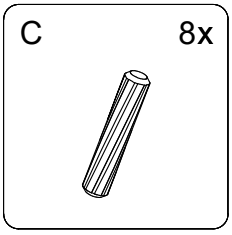

09

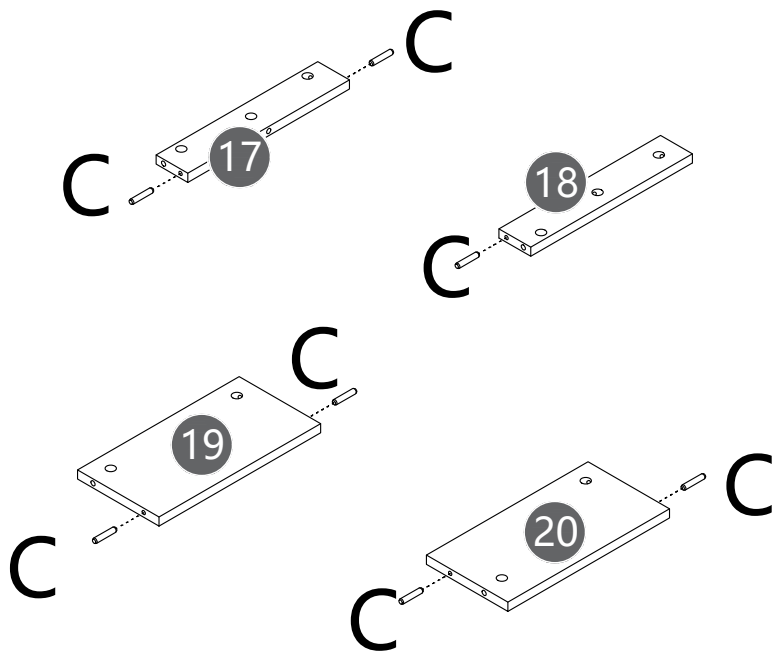

C 7x

10

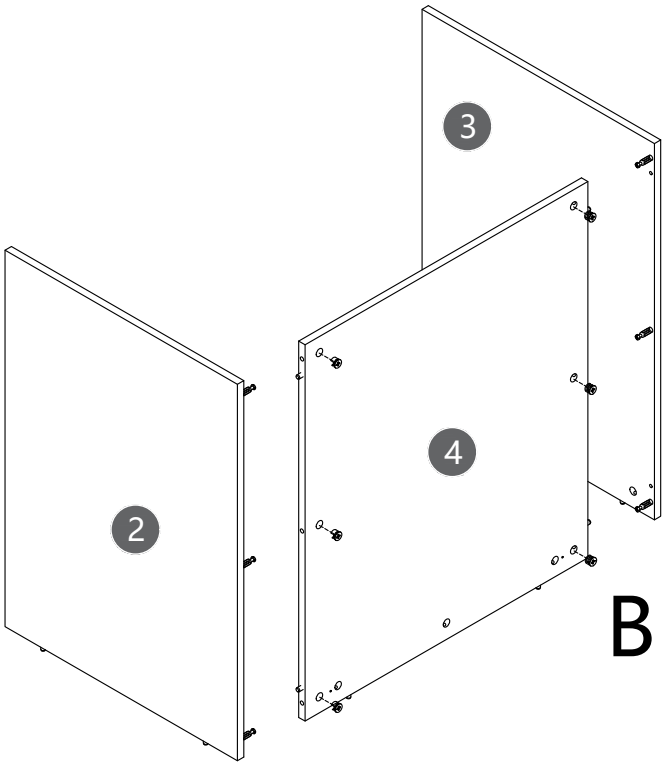

B 6x



11

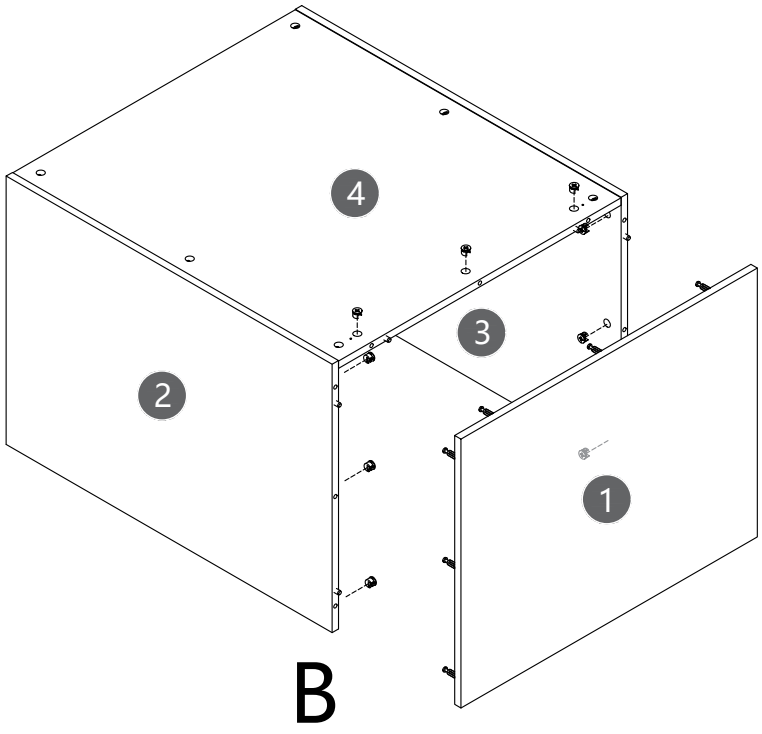

B

B 9x



12

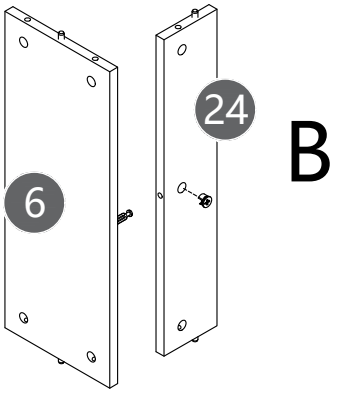

B

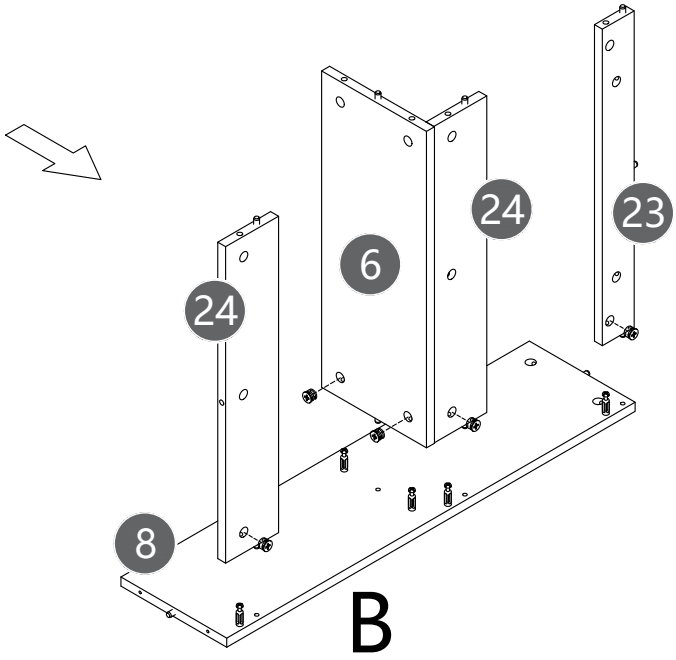

B

B 6x



13

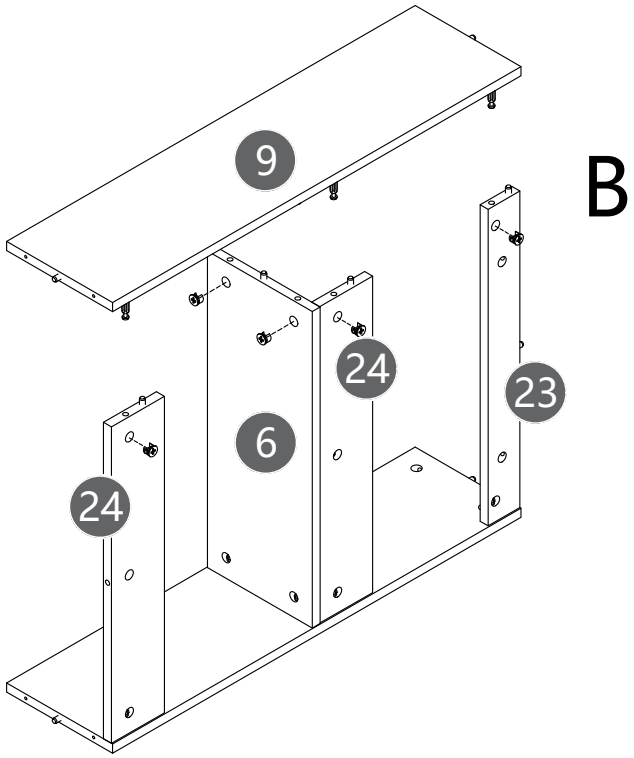

B 5x



14

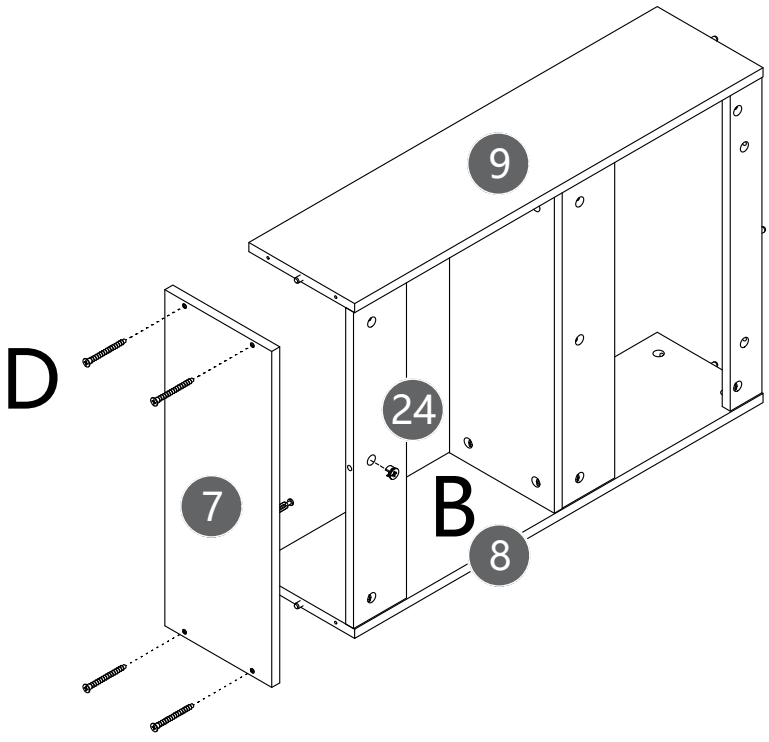

B 1x



D 4x



15

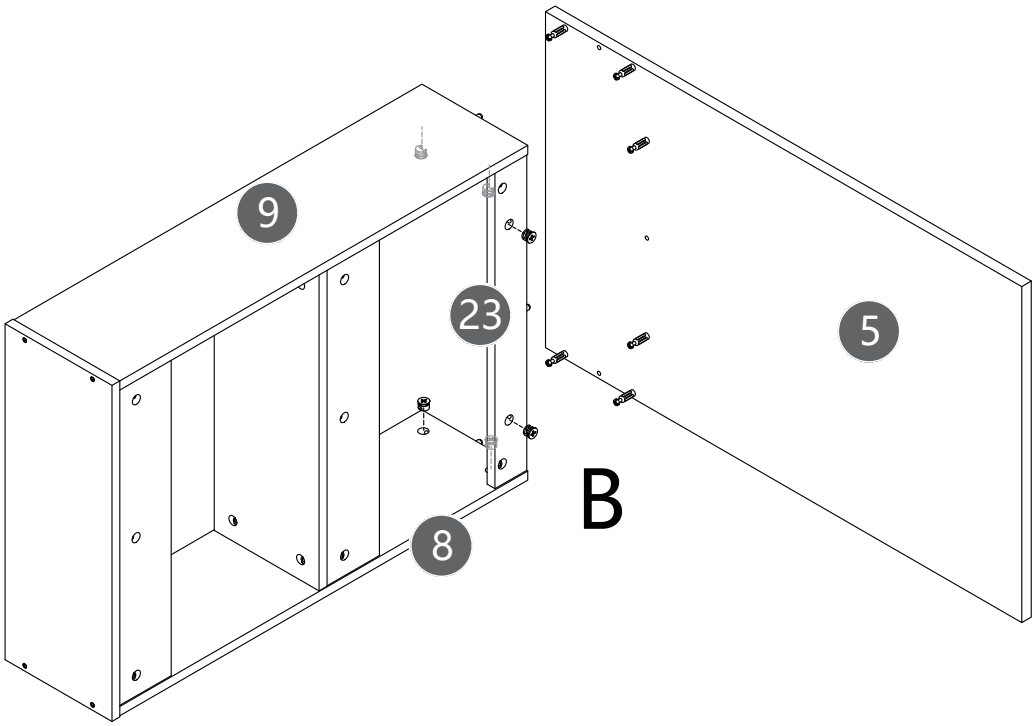

B 6x



16

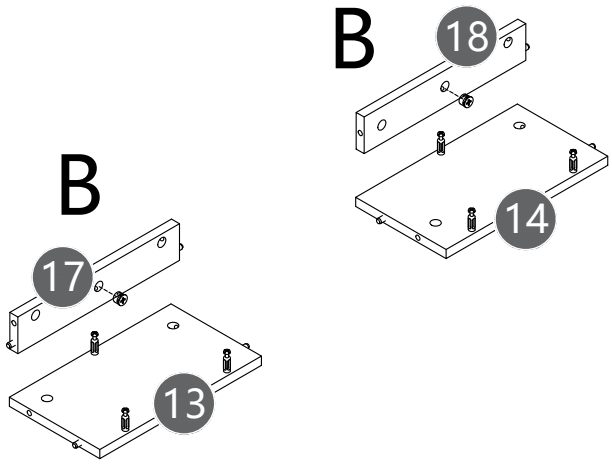

B 2x



17

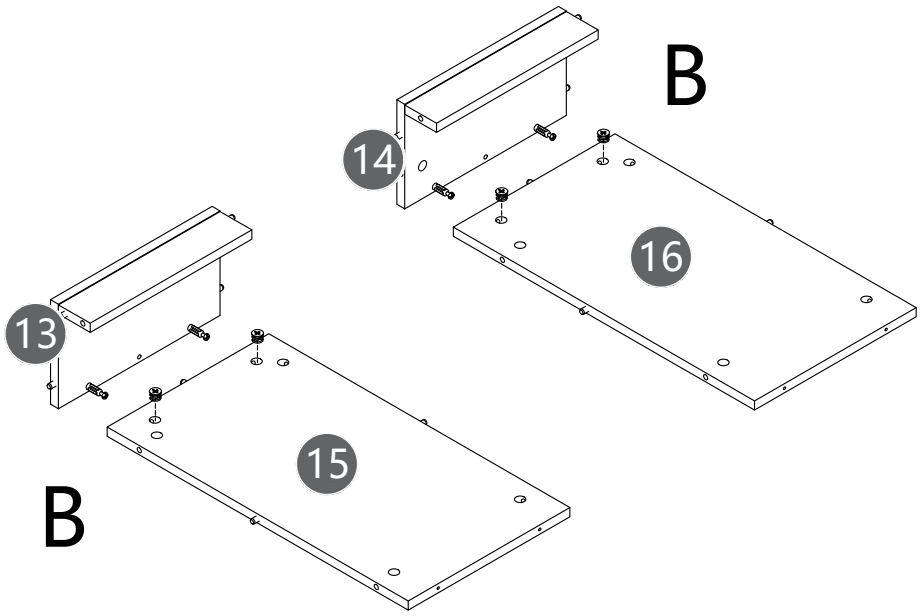

B	4x



18

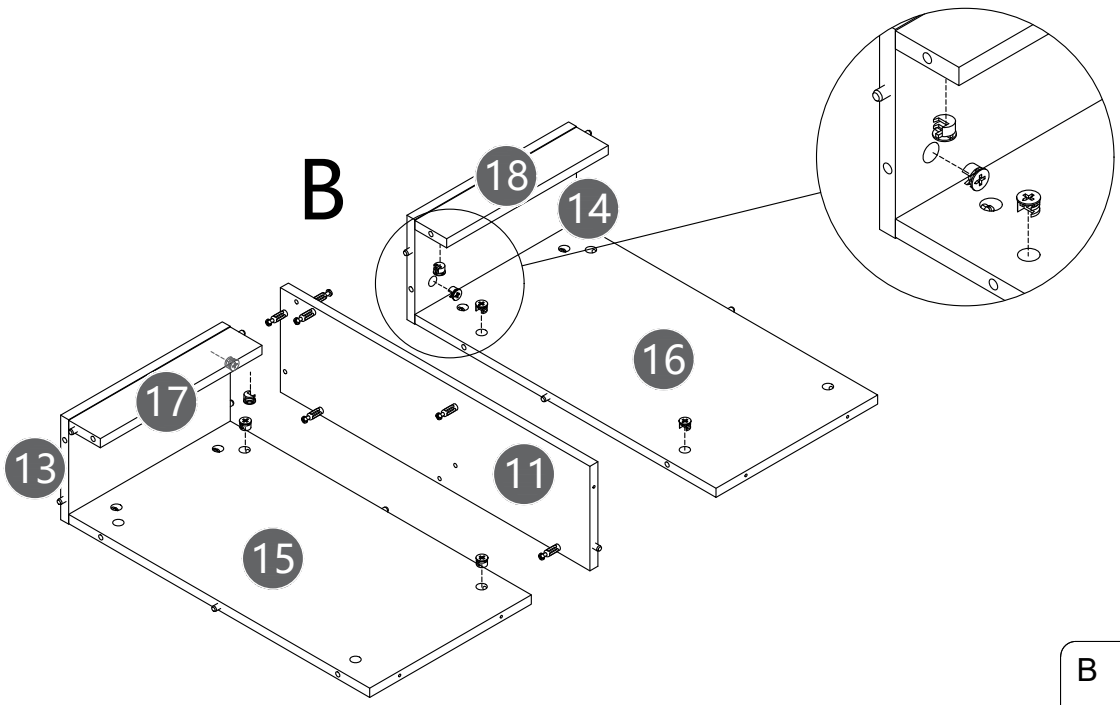

B	8x



19

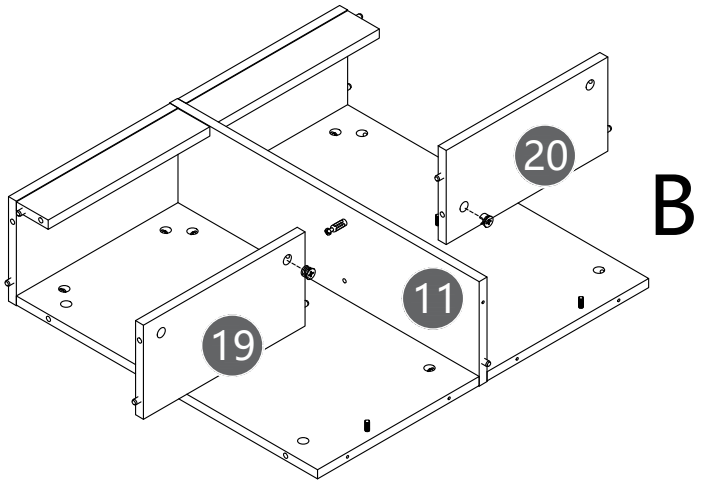

B 2x



20

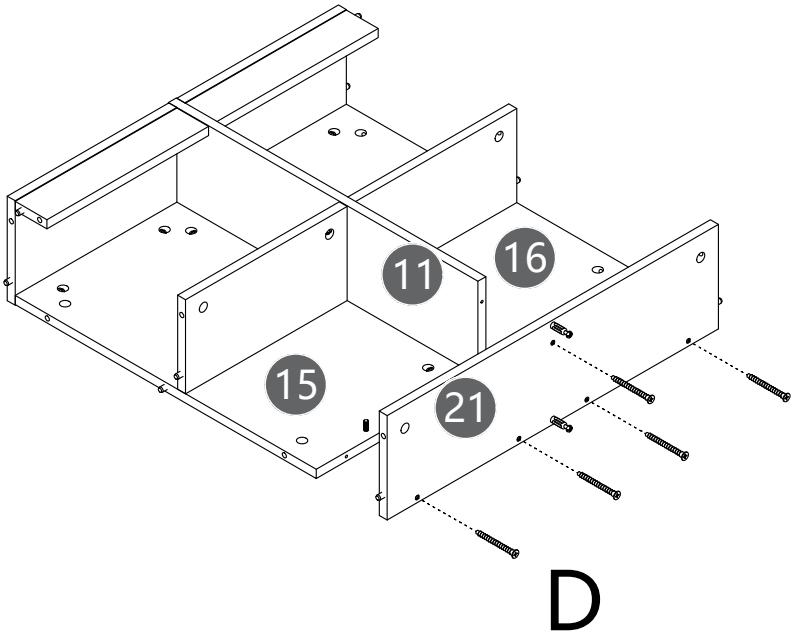

D 5x



21

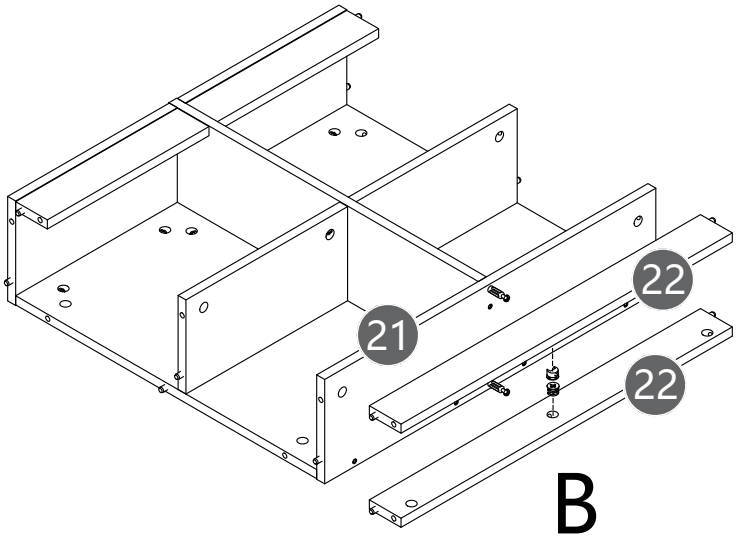

B 2x



22

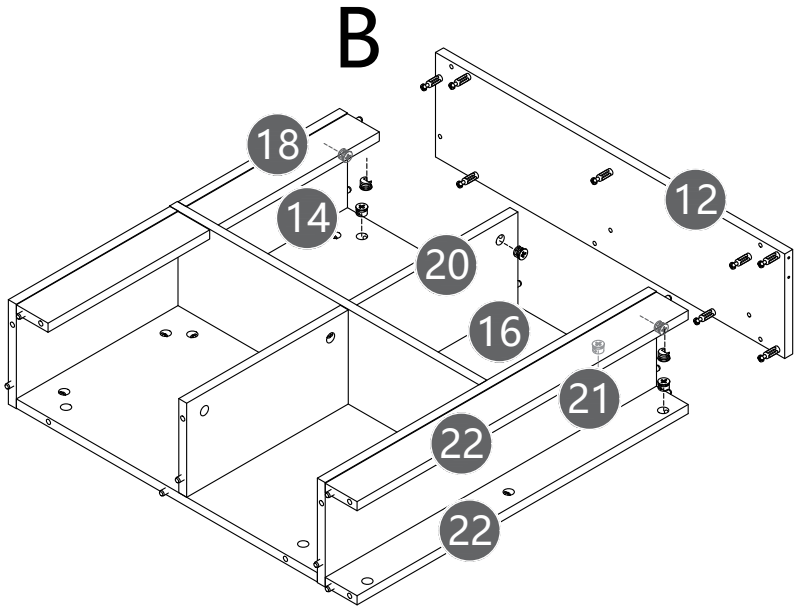

B 8x



23

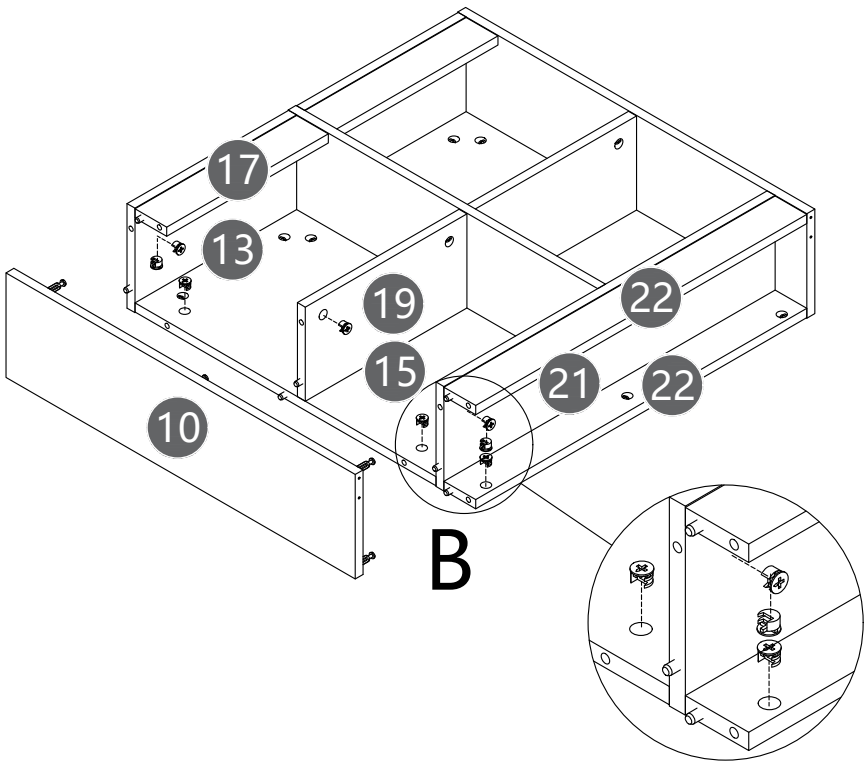

B 8x



24

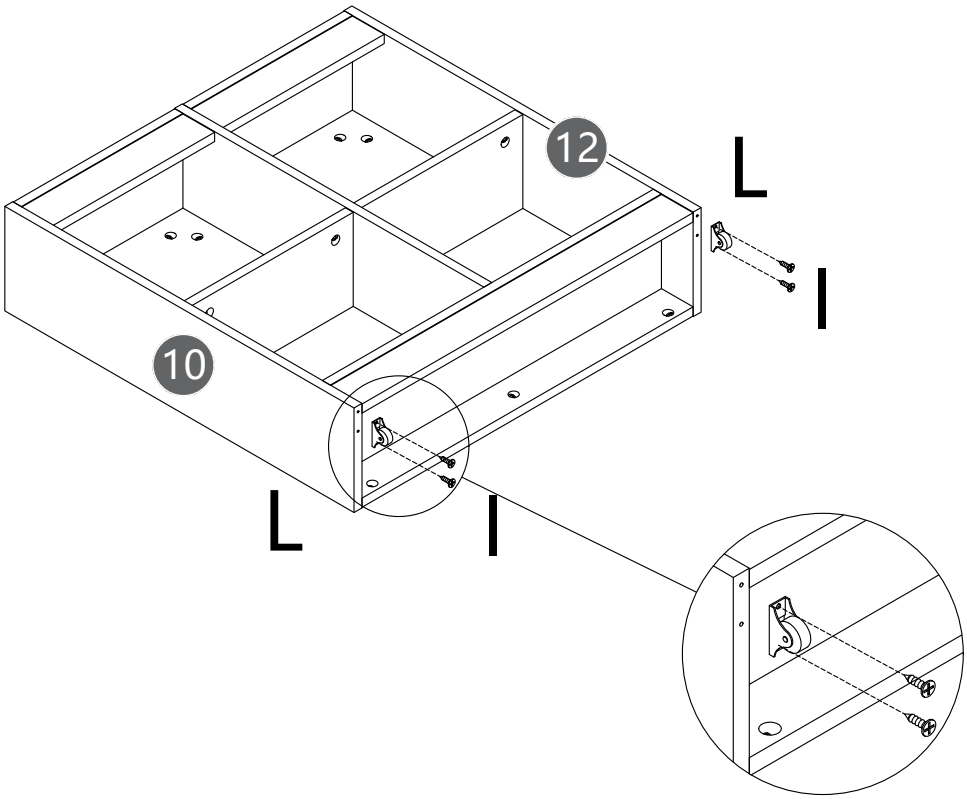

I 4x

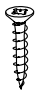

L 2x



25

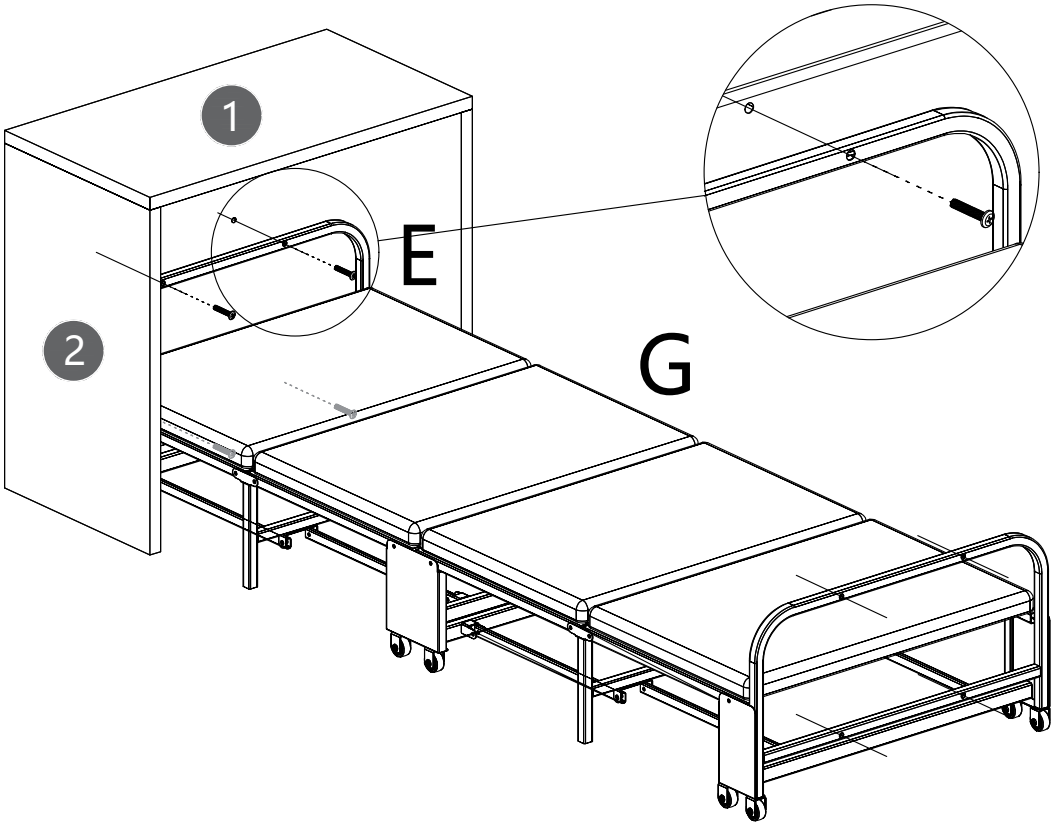

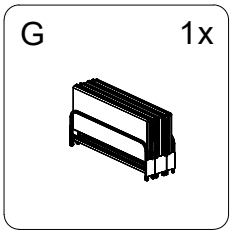

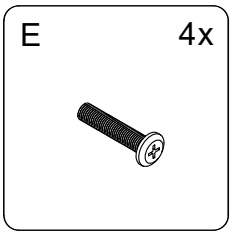

26

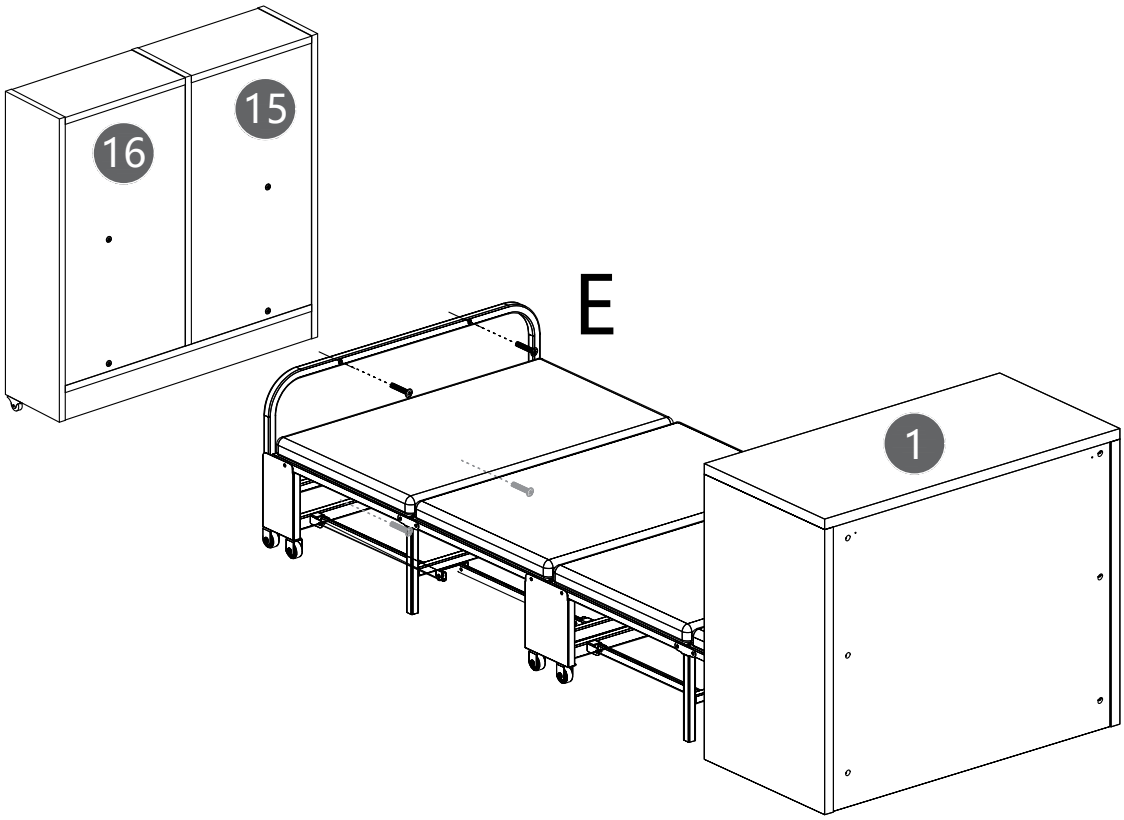

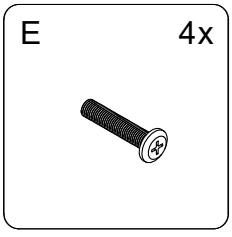

27

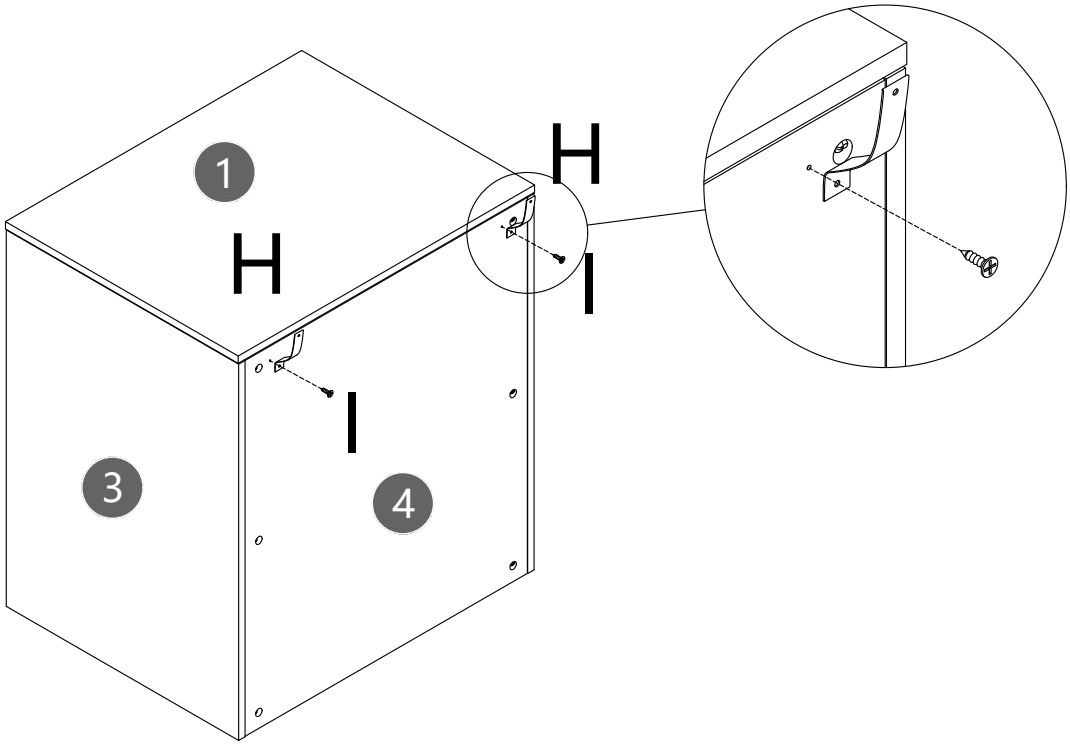

H 2x

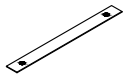

I 2x



28

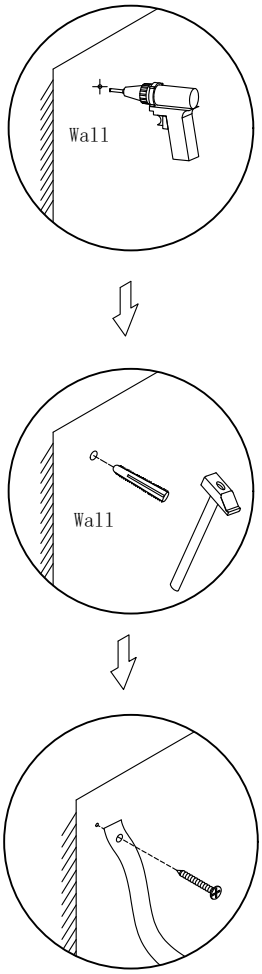

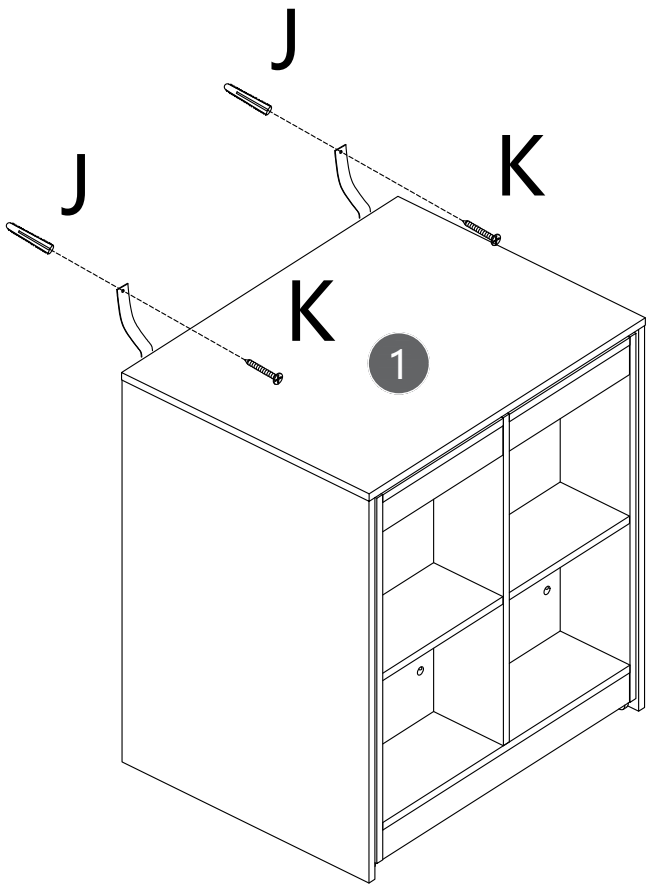

J 2x



K 2x



29

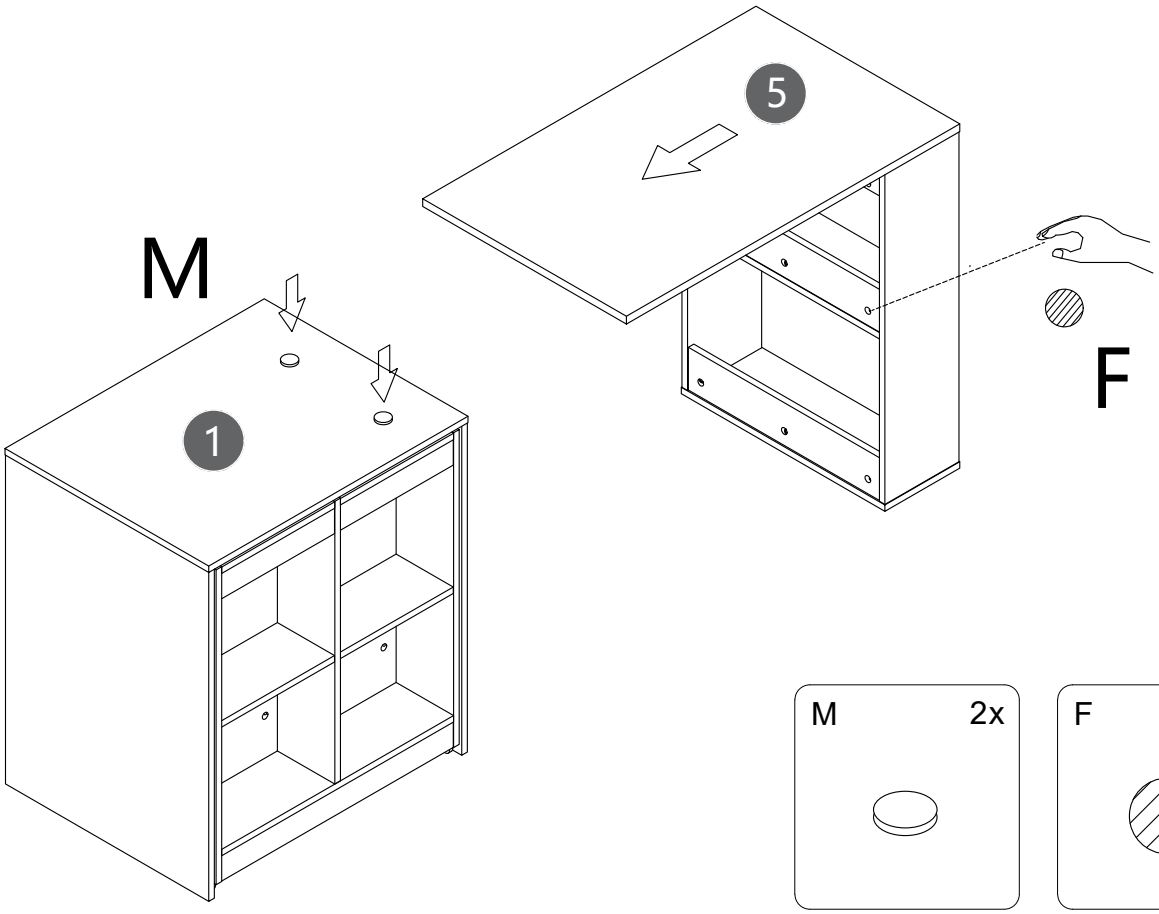

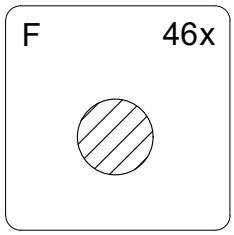

30

