PRODUCT SPECIFICATION

Model: HSU3219SB

Series	Matrix
Material	16 Gauge, Type 304 stainless steel
Installation Type	Undermount
Configuration	Single bowl
Finish	Embossed hexagon finish
Overall Dimensions	32" x 18 3/4" x 9"
Bowl Dimensions	30" x 16 1/8" x 8 3/8"
Drain Size	3 5/8"
Finishes Available	Stainless Steel, Gunmetal Grey
Minimum cabinet size	36"
Template Included	Yes
Clips Included	Yes
Drain Location	Rear
Accessories Included	Strainer, Cutting board, Drying rack and Strainer cap

Shown in Stainless Steel



MODEL	ACCESSORY
HSU3219SBGG	Cutting Board - CB1711BLR5
HSU3219SBGG	Strainer Cap - L-CAPSFGGMA
HSU3219SBGG	Strainer - L1SFGGMA
HSU3219SBGG	Drying Rack - DR1712BLR5
HSU3219SBSS	Cutting Board - CB1711BLR5
HSU3219SBSS	Strainer Cap - L-CAPSFSSMA
HSU3219SBSS	Strainer - L1SFSSMA
HSU3219SBSS	Drying Rack - DR1712BLR5

MODEL	FINISH
HSU3219SBGG	Gunmetal Grey
HSU3219SBSS	Stainless Steel

Stocked Color Options



Stainless Steel

Gunmetal Grey

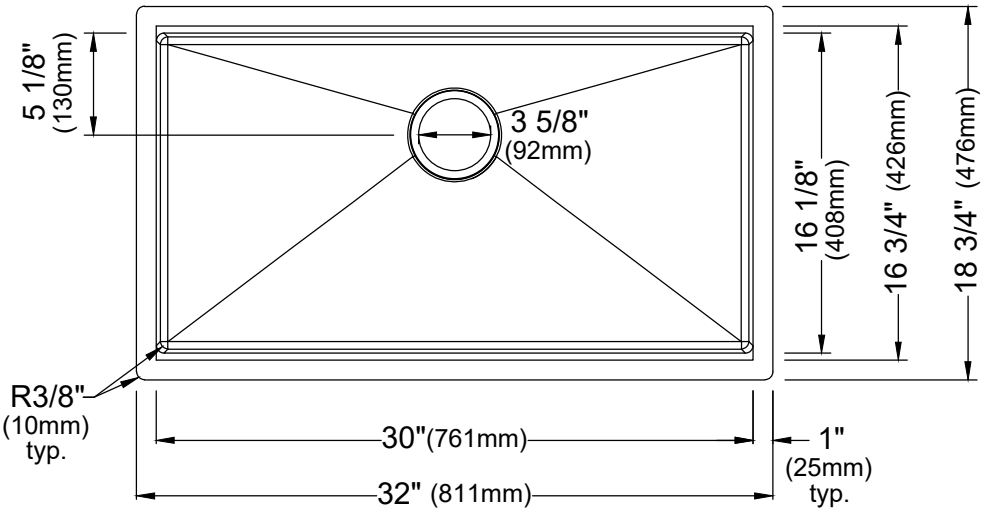

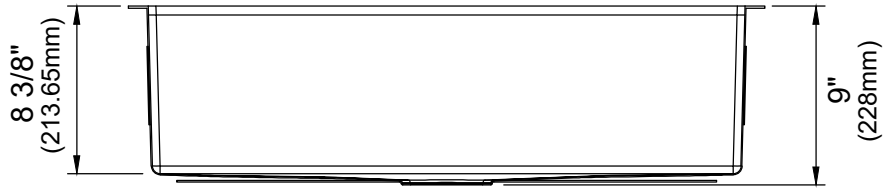

Listing and certifications:
cUPC

Limited lifetime warranty

We reserve the right to update product specifications without notice. Please visit karran.com for the most current specification sheets. All dimensions are accurate to 1/4". REV 10-2026