INSTALLATION
Product Manual

Version: 590058US-01-26A-SJT

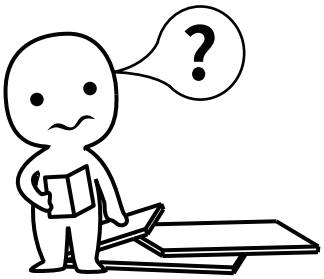

IMPORTANT INFORMATION!

please read the entire manual before starting to assemble and/or using this product.follow the manual thoroughly and keep it for further reference.

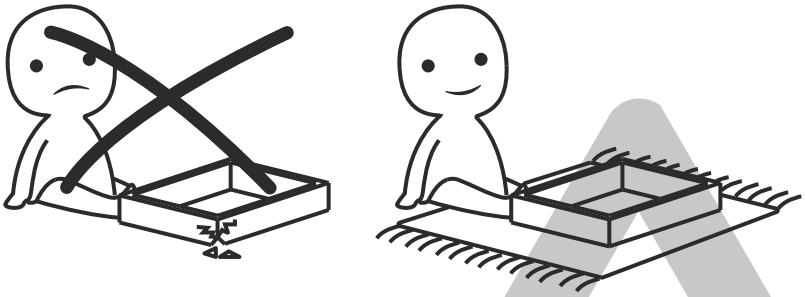

AVOID SCRATCHES!

In order to avoid scratching this furnuture should be assembled on a soft layer-could be a rug.

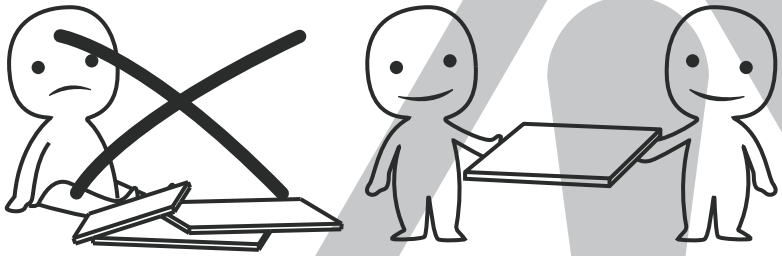

IMPROVE EFFICIENCY !

Try to find a partner to install with you, which can speed up the installation efficiency and shorten the time.

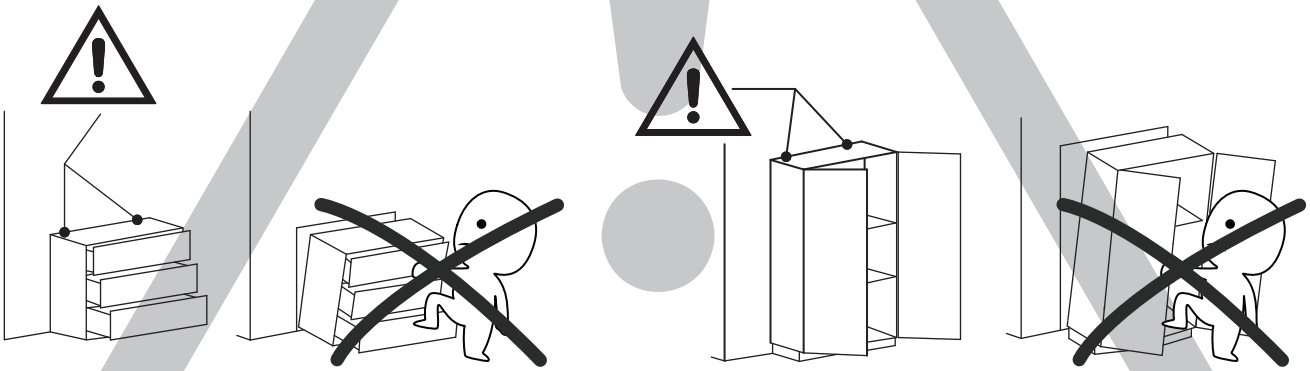

ANTI-TOPPLE WARNING !

Overturned furniture can cause serious or fatal crush injuries. To prevent tipping over, be sure to use the wall attachment, if not included with this product. Please purchase the wall attachment that fit your wall. If unsure, seek professional advice. Please read and follow each step of the instructions carefully.

IMPORTANT !

It is important that any product which is assembled using any kind of screw is re-tightened 2 weeks after assembly,and once every 3 months - in order to assure stability through-out the lifespan of the product.

For regular maintenance and cleaning of the product, for the frame, please use a rag dipped in neutral detergent to fully wipe it, and then dry it with a clean rag.For glass materials, wipe with a rag dampened with water glass cleaner, and then dry with a dry rag.

Do not use an electric screwdriver, and do not use too much force when installing, because the board is easy to break.

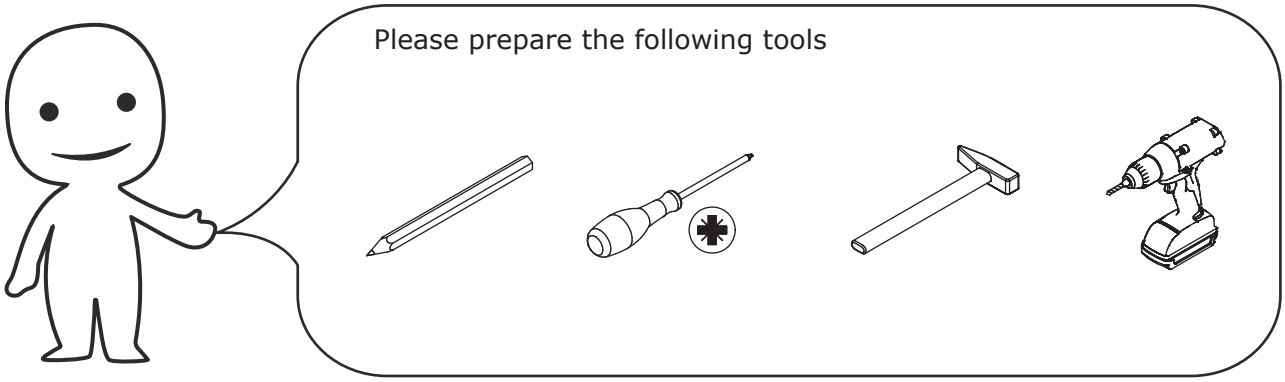



When installing, please carefully confirm whether each screw corresponds to the manual, accessories with similar shapes can be distinguished by size

A x 203	B x 15	C x 2	D x 4	E x 136
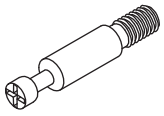	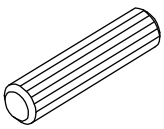	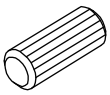	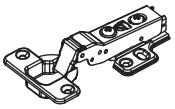	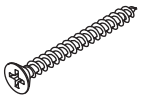
∅6 x 40 mm	∅8 x 40 mm	∅8 x 20 mm		∅3.5 x 30 mm

F x 120	G x 6	H x 10	I x 4	J x 296
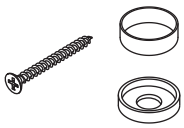	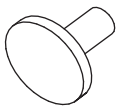	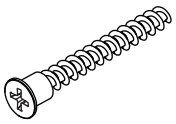	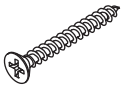	
		∅7 x 50 mm	∅4 x 25 mm	∅3.5 x 12 mm

L x 4	M x 30	N x 30	O x 34	P x 2
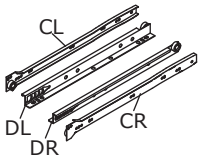	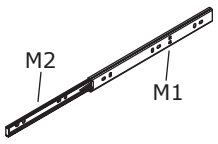			
			∅4 x 8 mm	∅4 x 18 mm

Q x 203	R x 2	S x 34	T x 34
	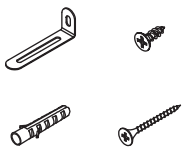		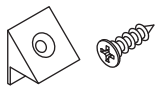
∅15 x 9 mm			

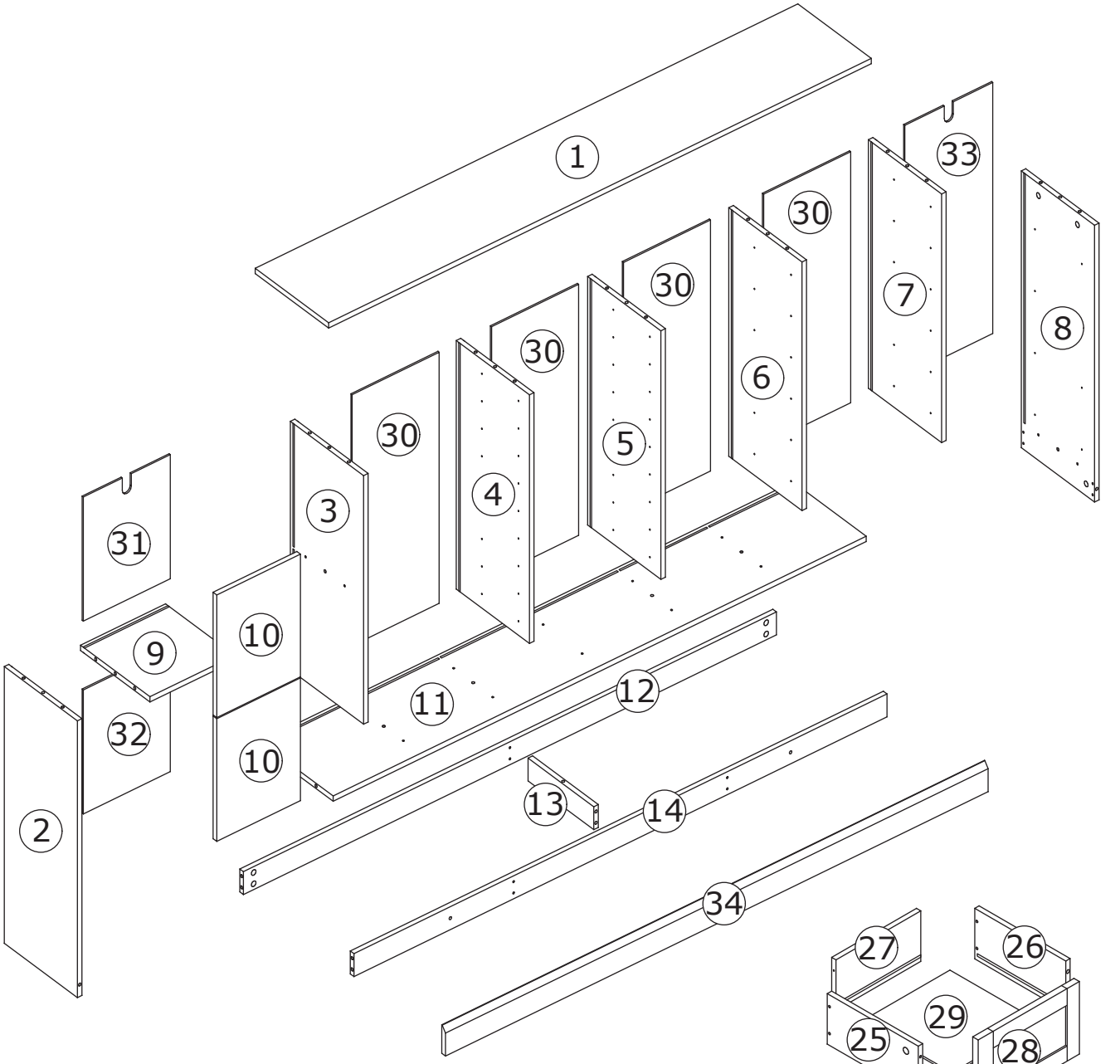

⚠WARNING





Children have died from furniture tipover.To reduce the risk of furniture tipover:

- ALWAYS install Anti-tip device provided.
- NEVER put a TV on this product.
- NEVER allow children to stand,climb or hang on drawers,doors,or shelves.
- NEVER open more than one drawer at a time.
- Place heaviest items in the lowest drawers.

This is a permanent label.
Do not remove!

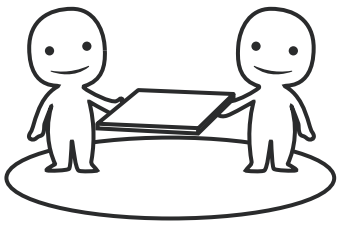

ASSEMBLED BY 2 ADULTS

Sllides Must Be Separated Before Assembly.
After Separated, Set Aside Until Needed for Assembly.

Las diapositivas deben separarse antes del montaje.
Después de la separación, déjelo a un lado hasta que sea necesario.

Les glissières doivent être séparées avant I'assemblage.
Après la séparation, mettez de côté jusqu'au moment de I'assemblage.

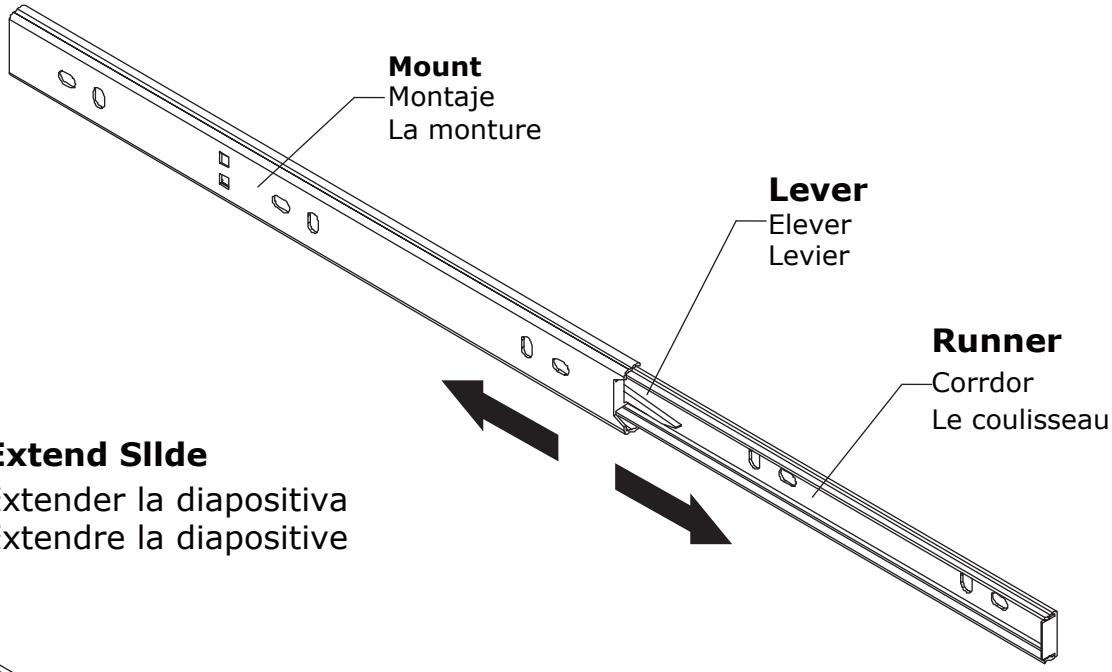

STEP 1: Extend Sllde
Extender la diapositiva
Extendre la diapositive

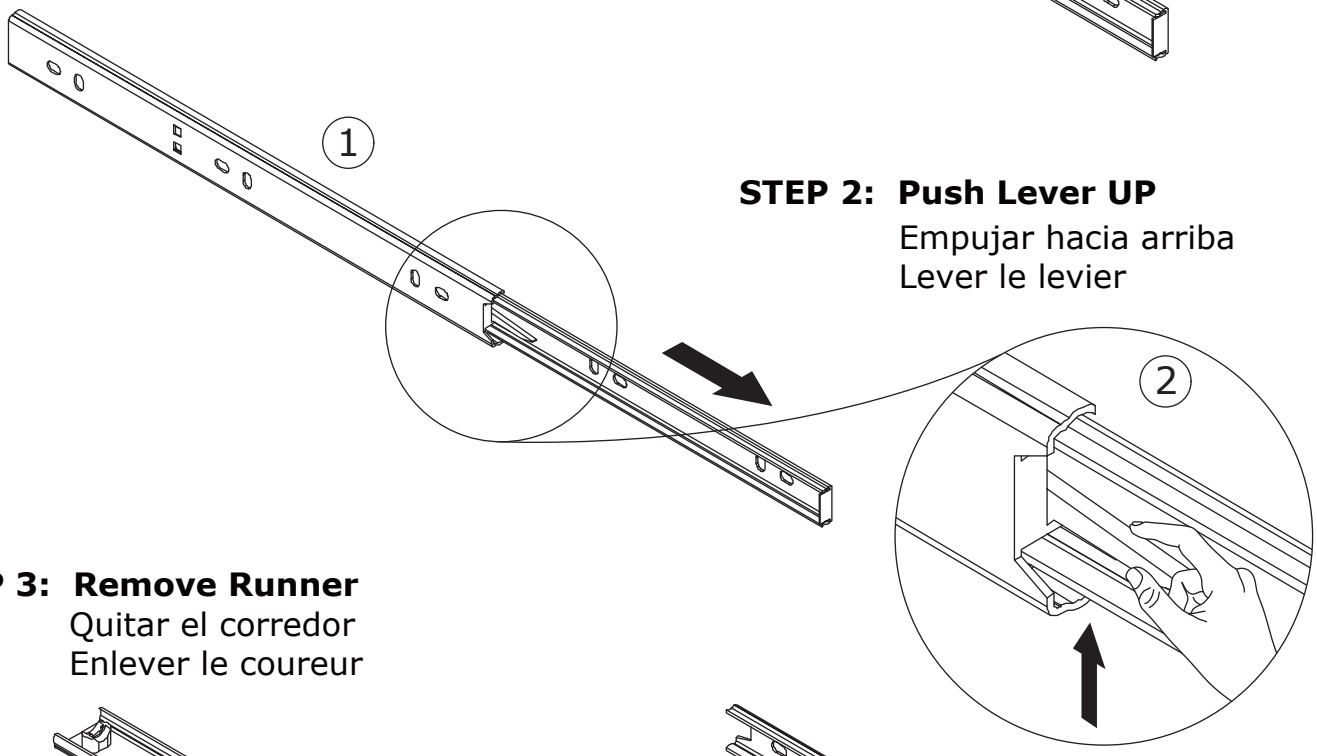

STEP 2: Push Lever UP
Empujar hacia arriba
Lever le levier

STEP 3: Remove Runner
Quitar el corredor
Enlever le coureur

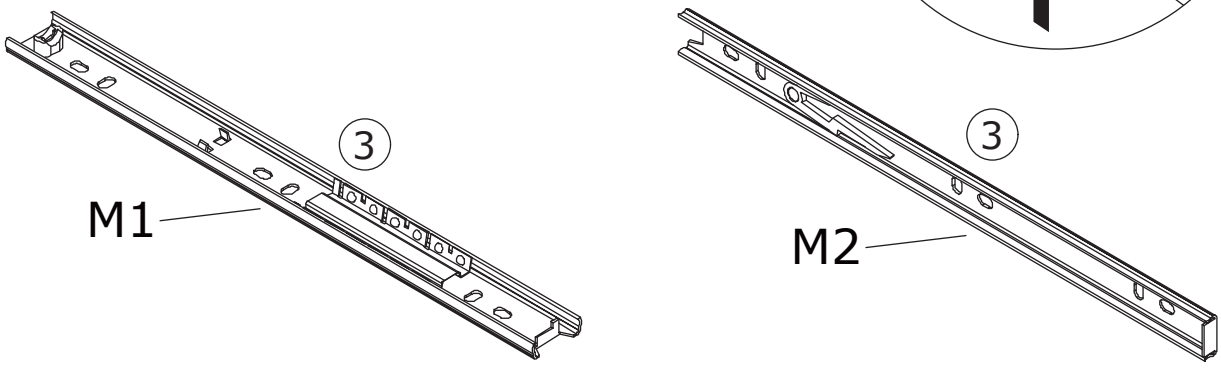

1

A x 2

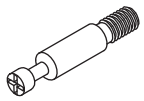

∅6 x 35 mm

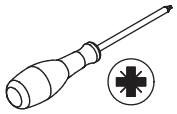

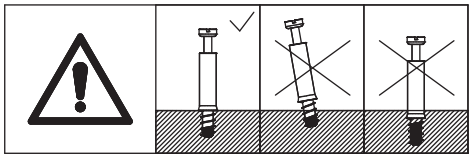

Install screw rod A onto wooden board 3.

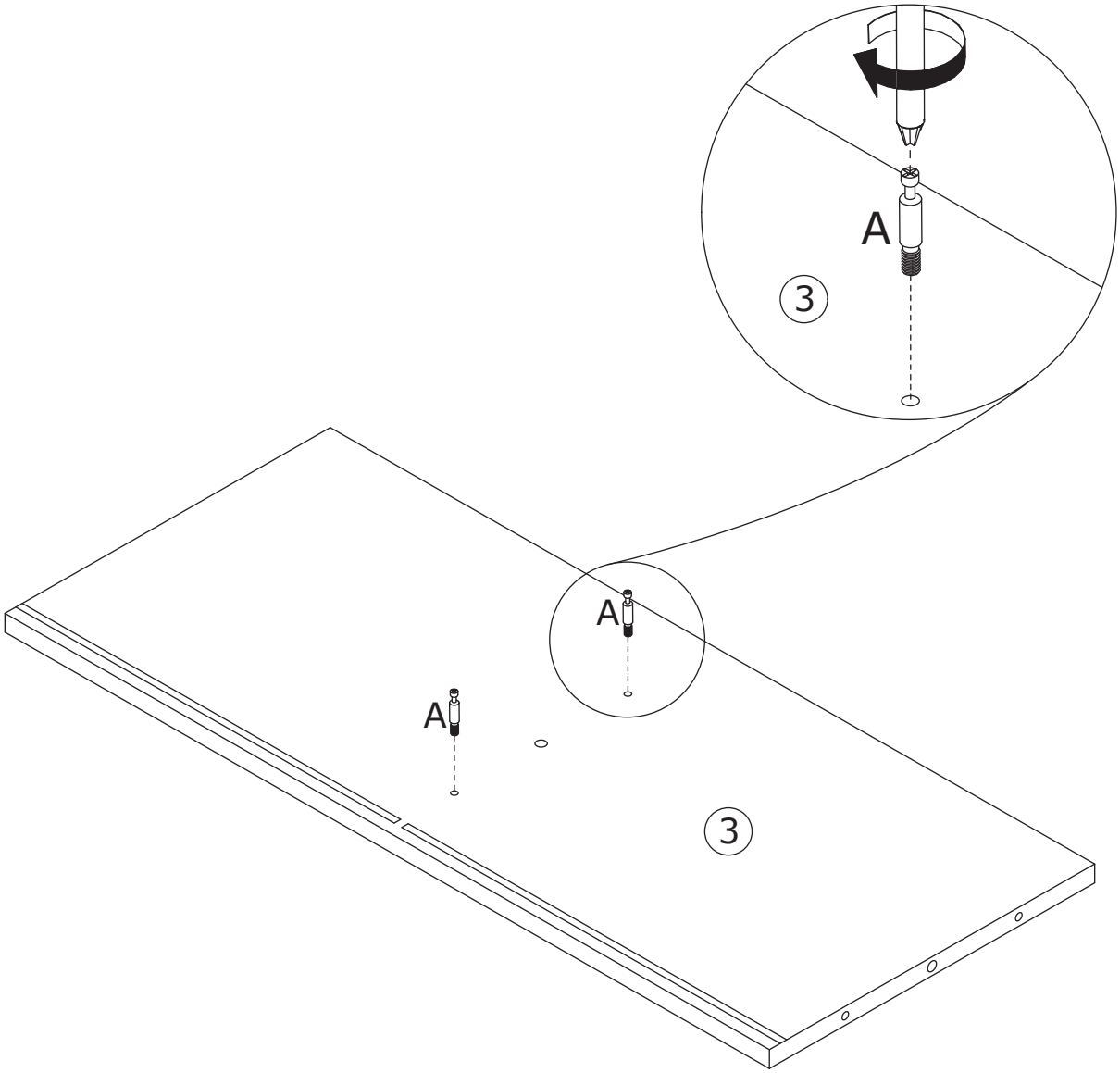

2

B x 1	Q x 2	
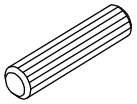		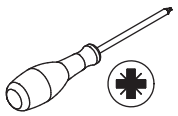
∅8 x 40 mm	∅15 x 9 mm	

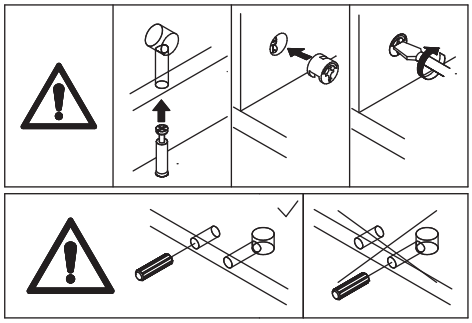

Connect wooden boards 3 and 9 using dowel B, then insert eccentric cam Q and tighten.

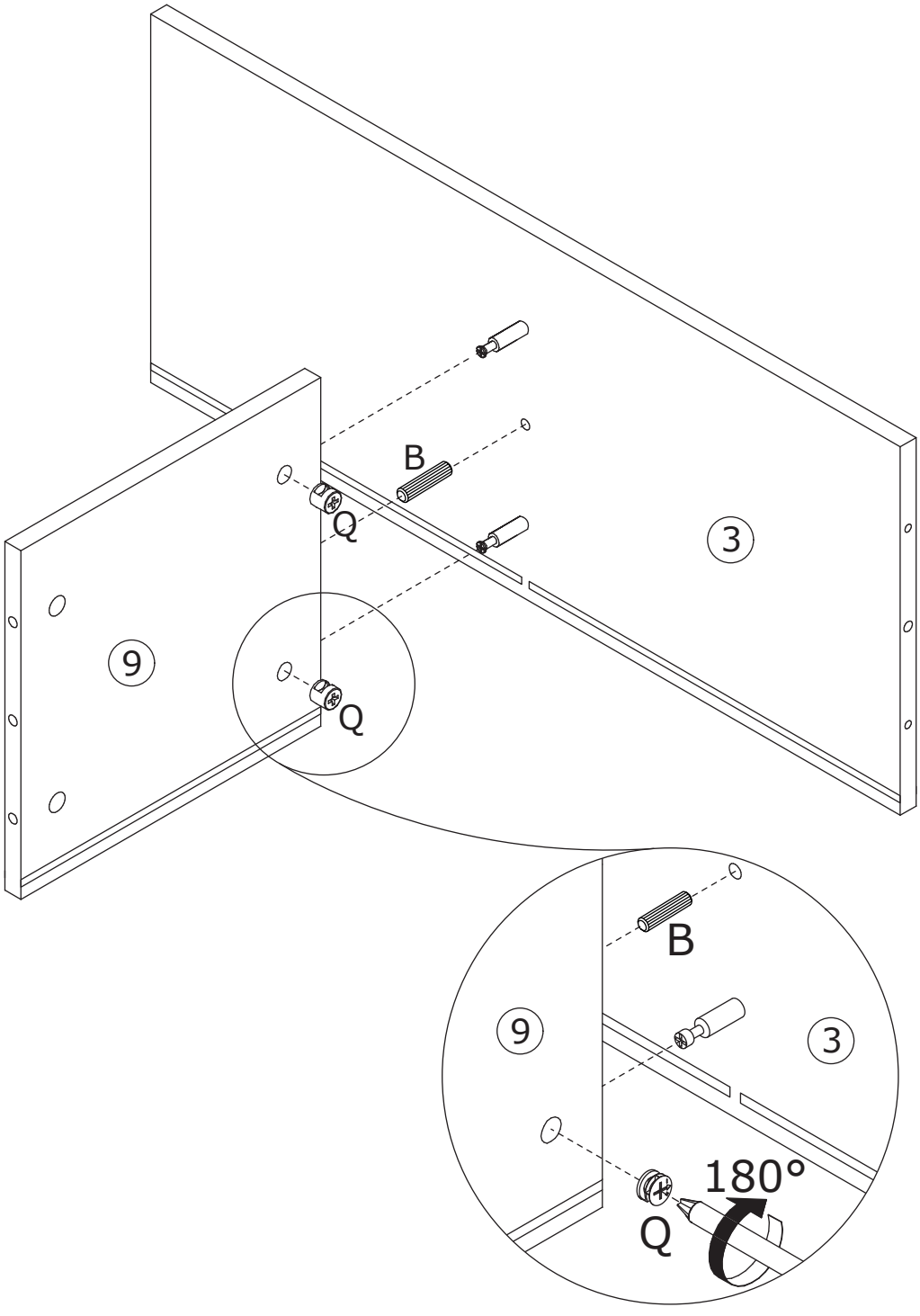

3

B x 1	H x 2	
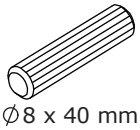	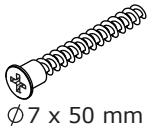	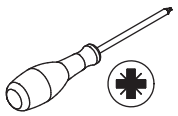
∅8 x 40 mm	∅7 x 50 mm	

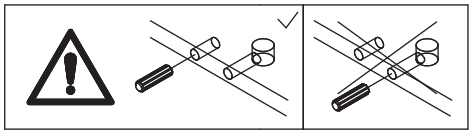

Connect wooden boards 3 and 11
using dowel B, then secure with screw H.

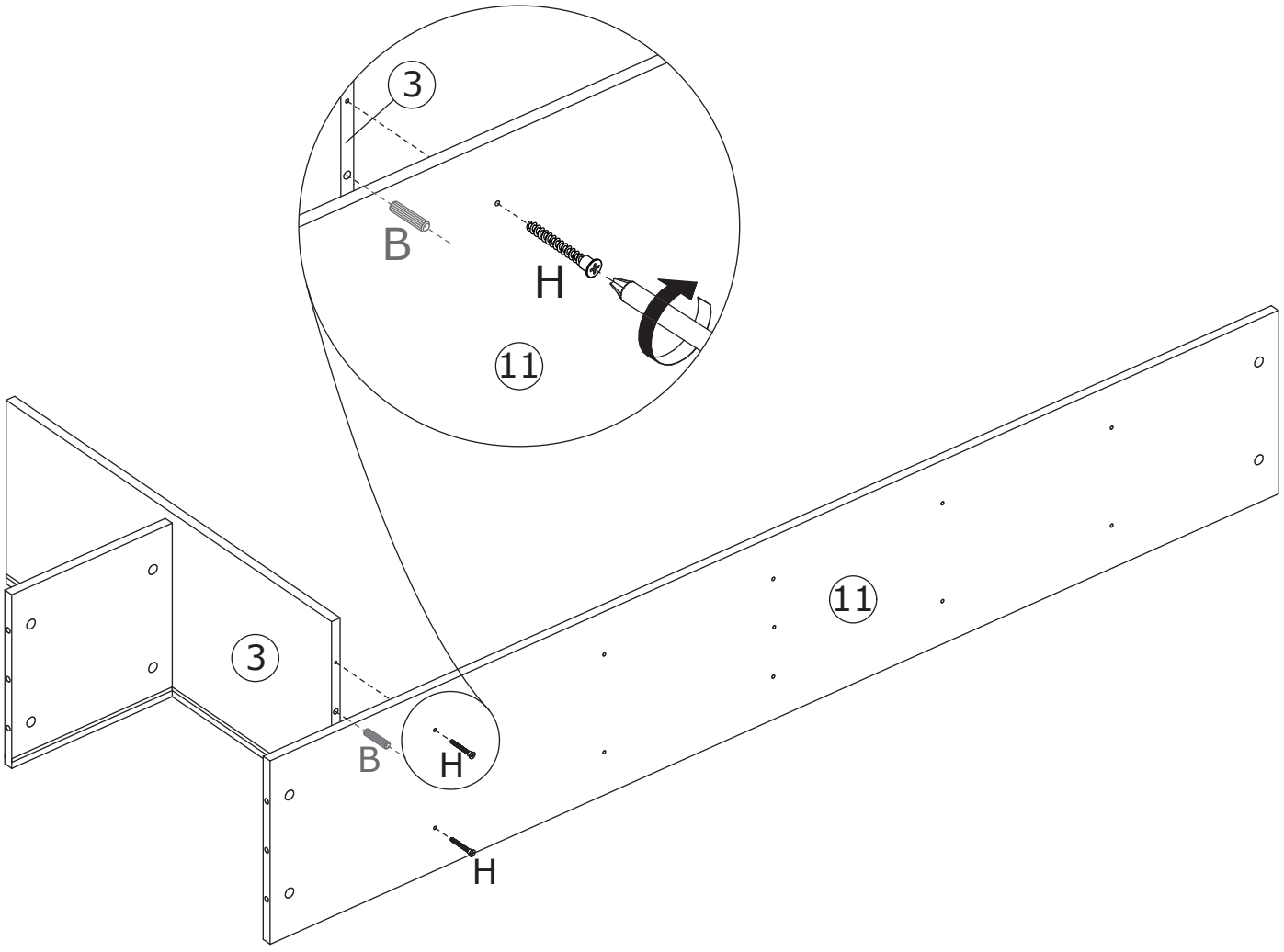

4

Insert wooden board 32 into the slots of wooden boards 3, 9, and 11.

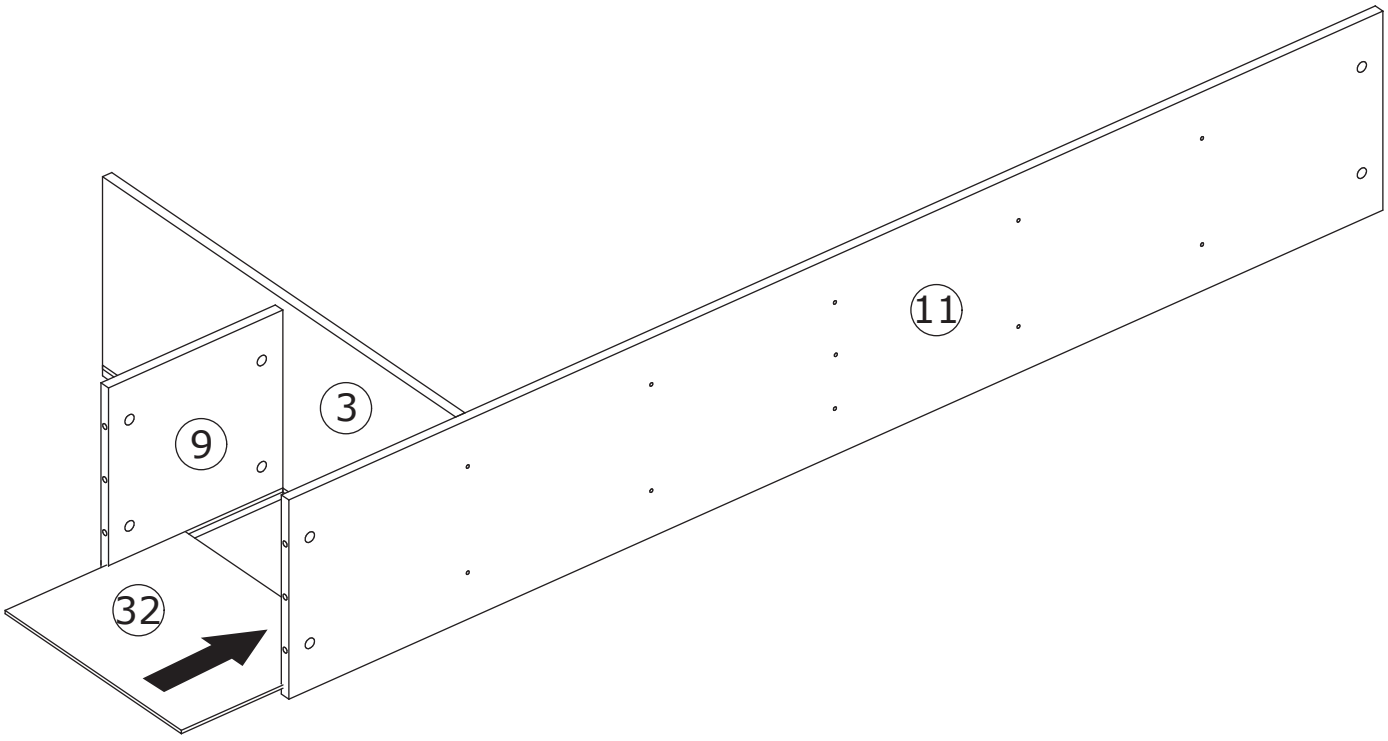

5

B x 3	H x 8	
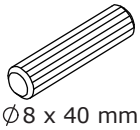	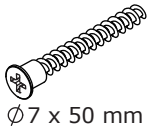	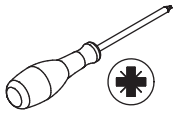
∅8 x 40 mm	∅7 x 50 mm	

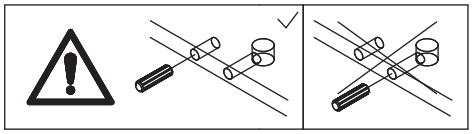

Connect wooden boards 4, 5, 6, 7, and 11 using dowel B, then secure with screw H.

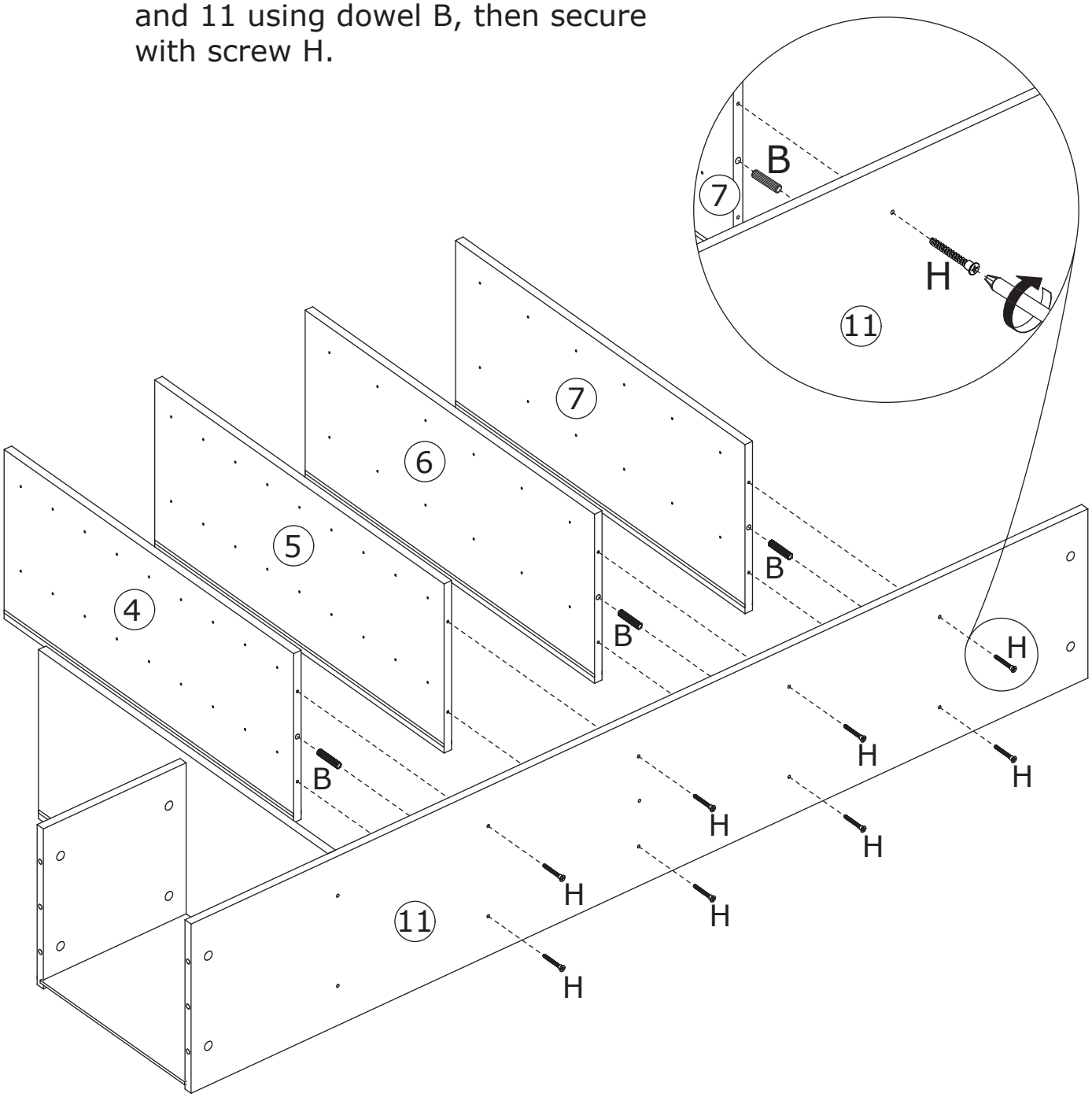

6

A x 4

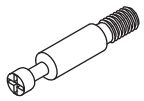

∅6 x 35 mm

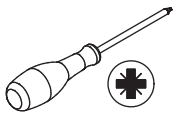

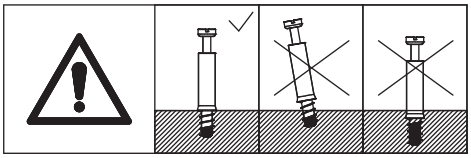

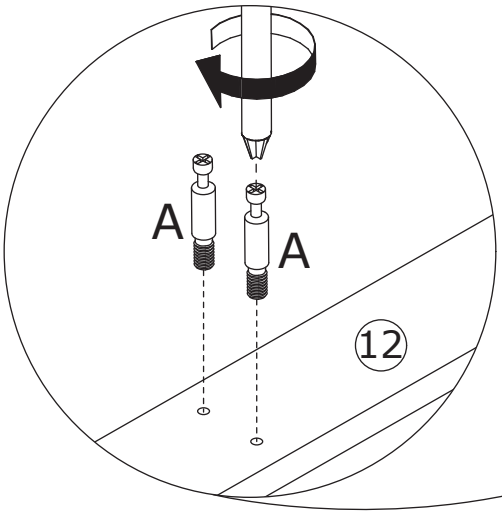

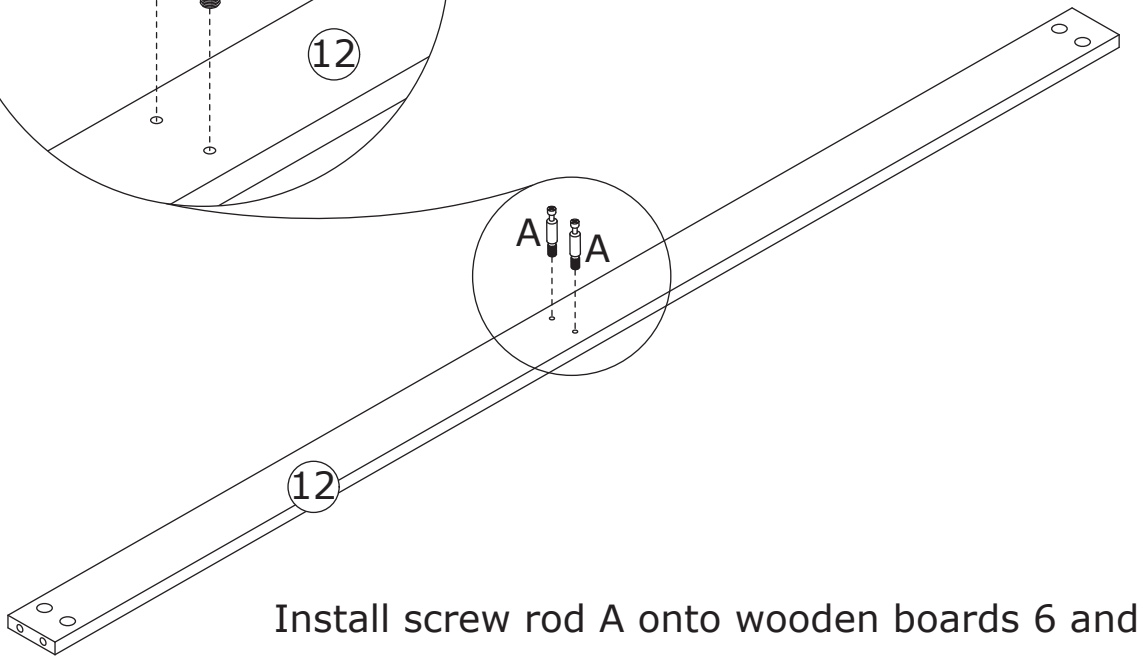

Install screw rod A onto wooden boards 6 and 14.

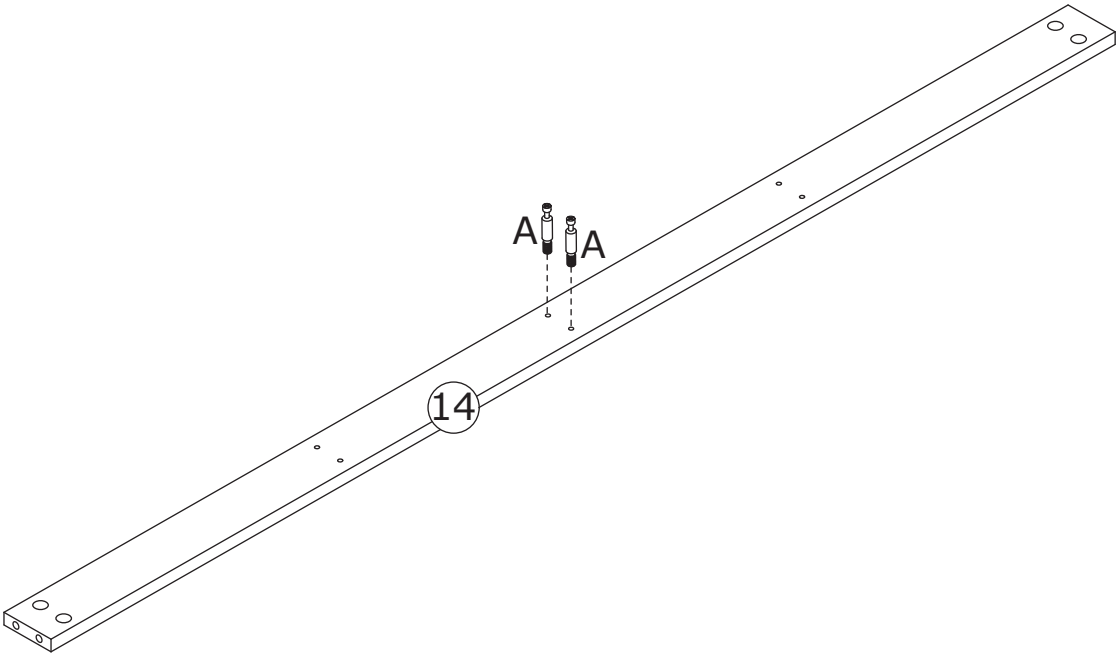

7

Q x 4



∅15 x 9 mm

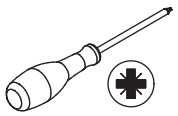

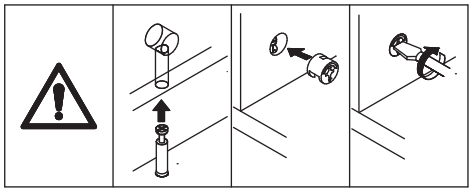

Connect wooden boards 12, 13, and 14, then insert eccentric cam Q and tighten.

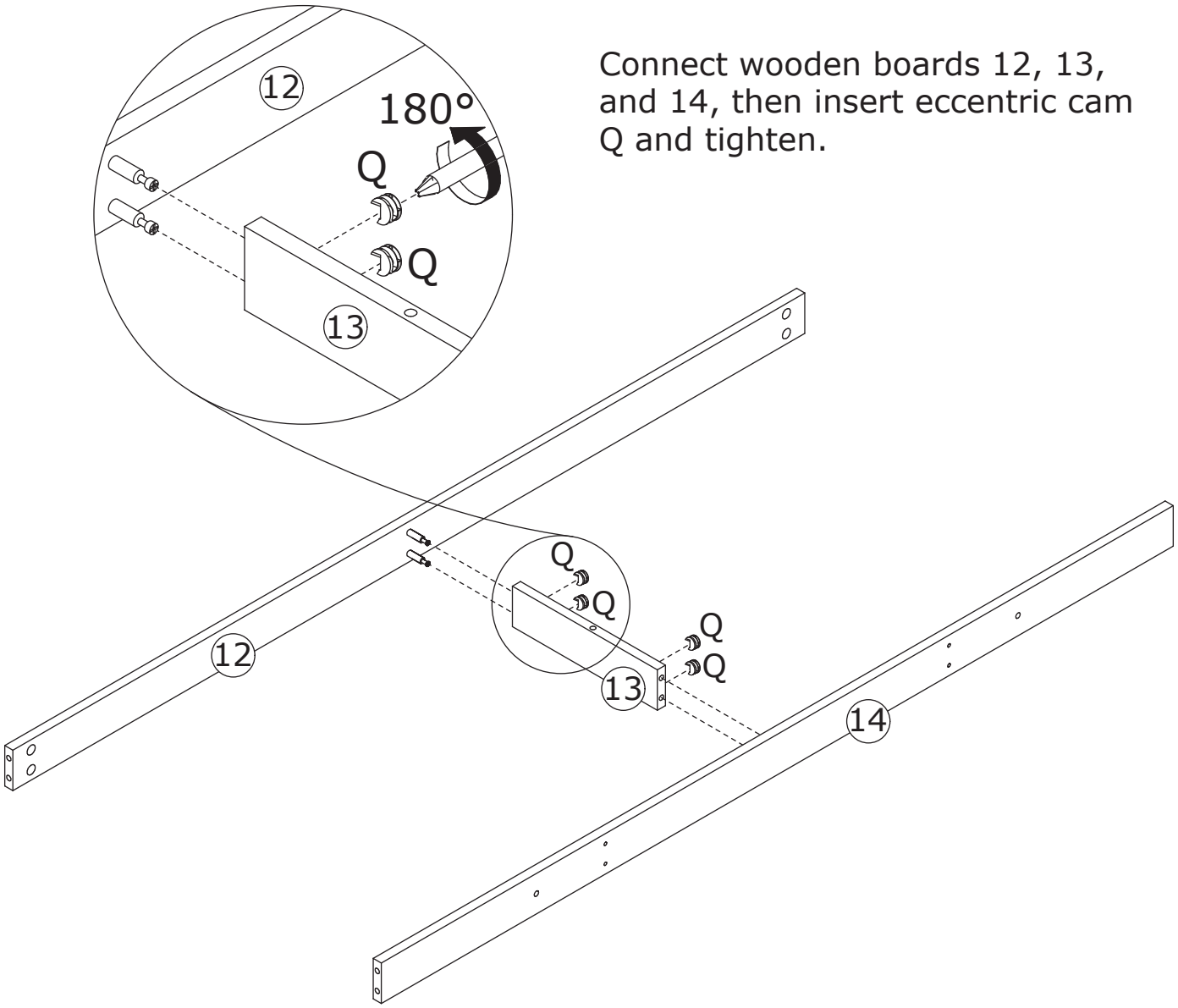

8

A x 1

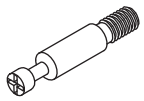

∅6 x 35 mm

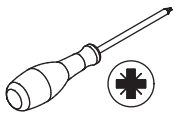

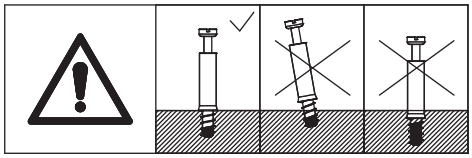

Install screw rod A onto wooden board 11.

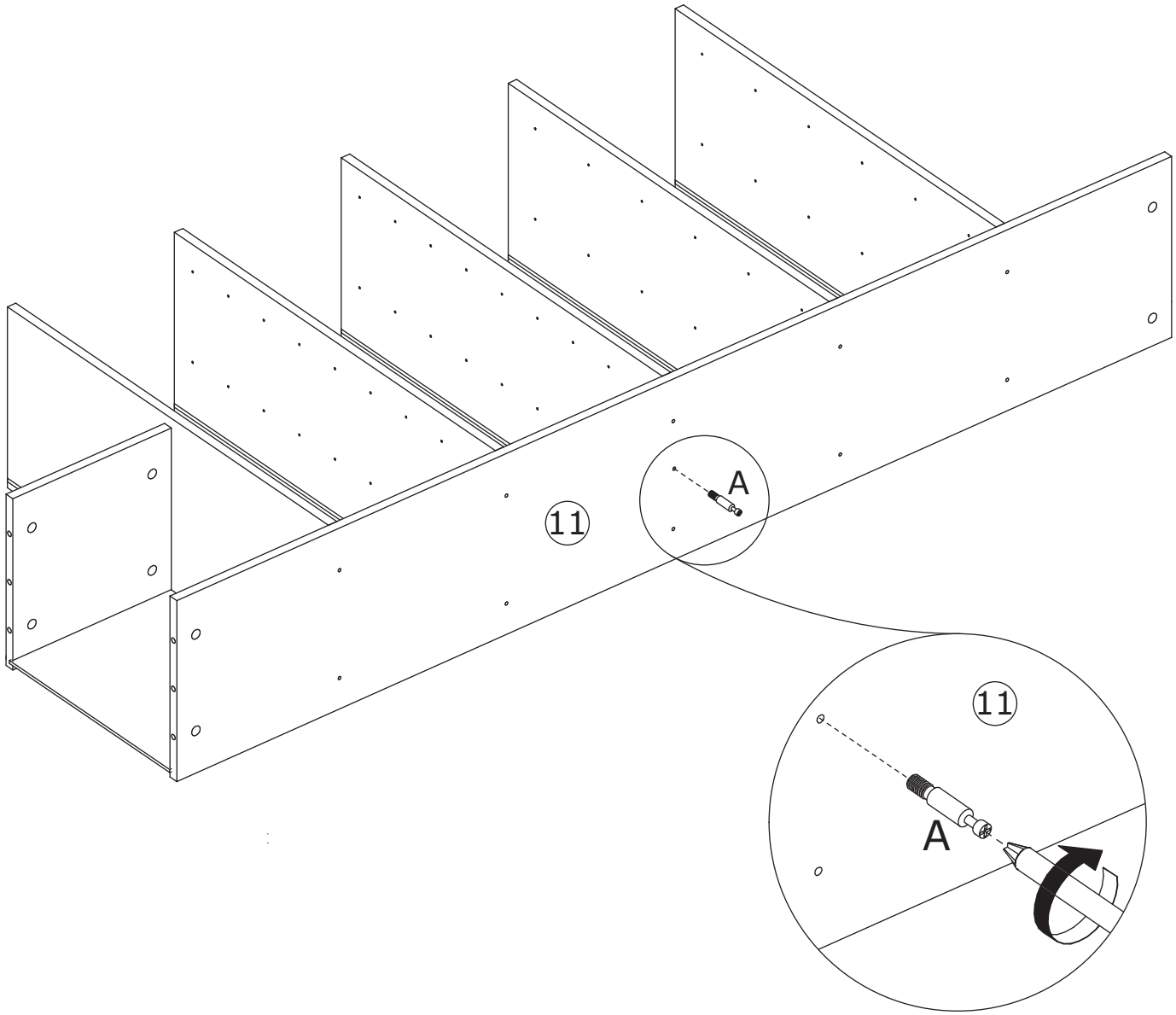

9

Q x 1



∅15 x 9 mm

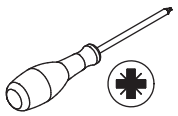

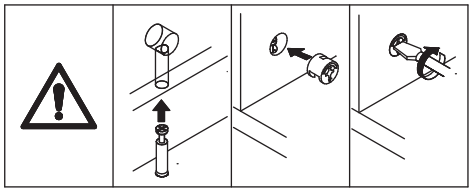

Connect wooden boards 11 and 13,
then insert eccentric cam Q and tighten.

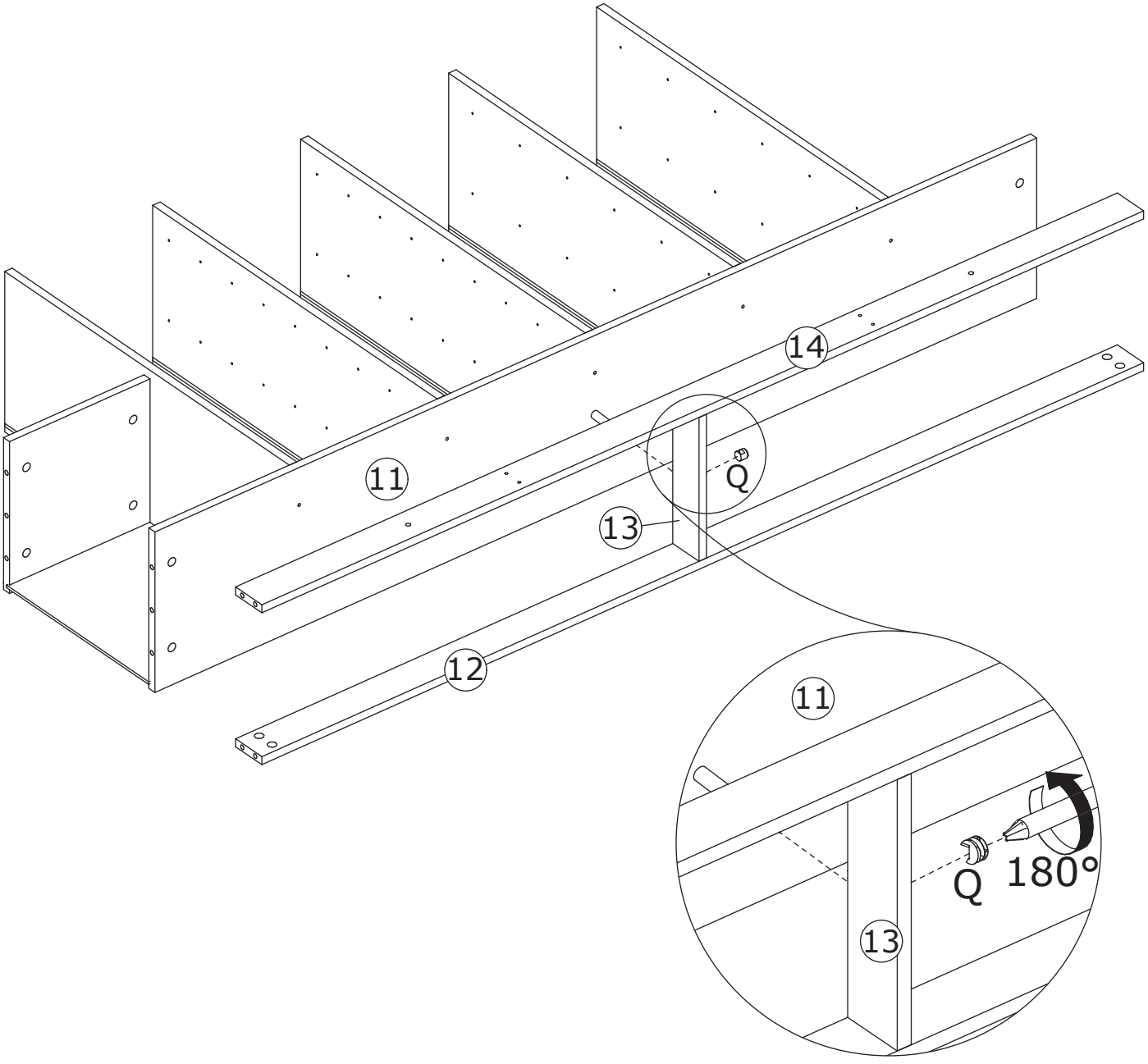

10

A x 14

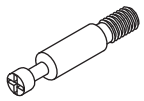

∅6 x 35 mm

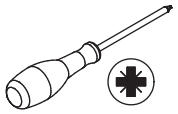

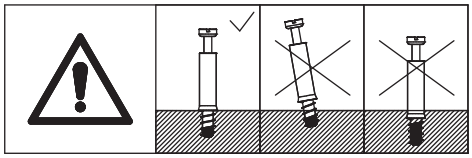

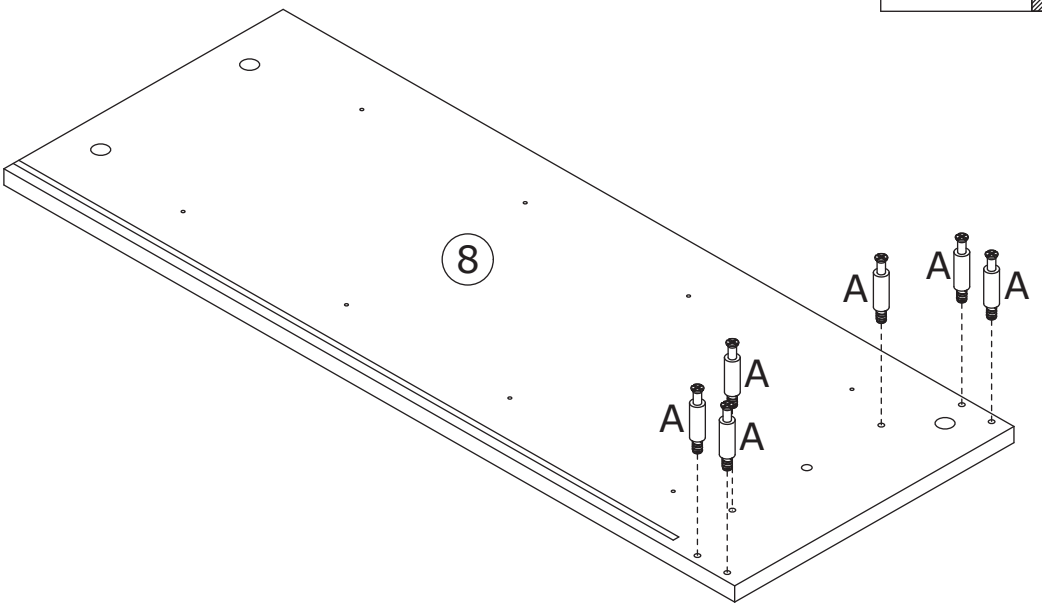

Install screw rod A onto wooden boards 2 and 8.

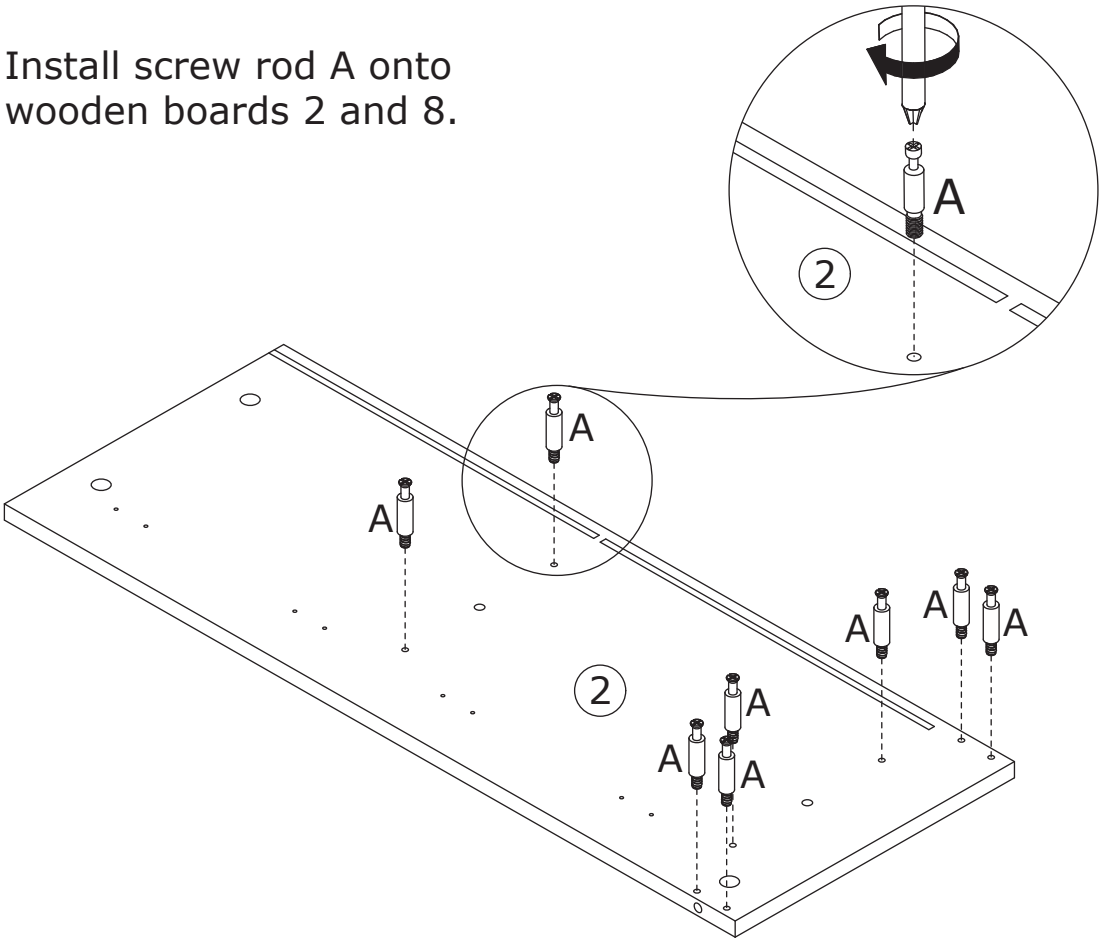

11

B x 2	Q x 8	
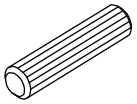		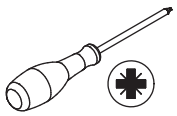
∅8 x 40 mm	∅15 x 9 mm	

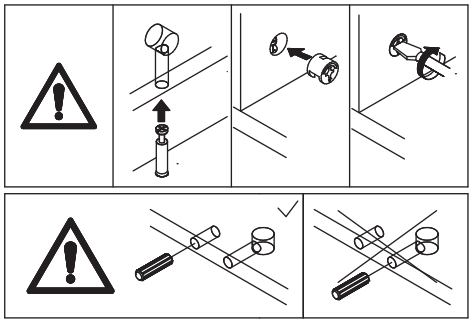

Connect wooden board 2 to wooden boards 9, 11, 12, and 14 using dowel B, then insert eccentric cam Q and tighten.

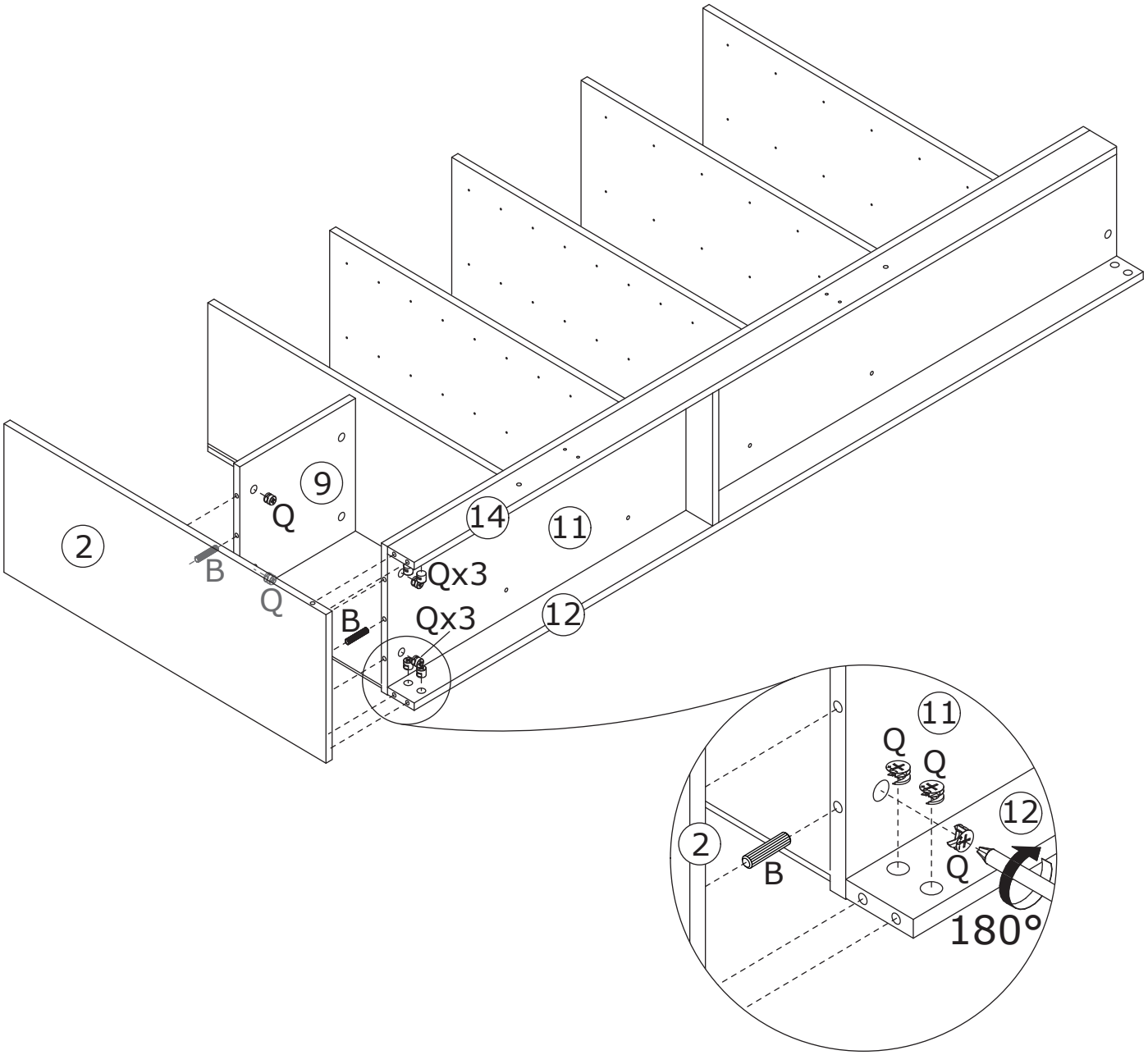

12

B x 1	Q x 6	
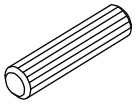		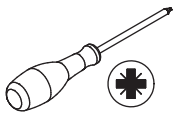
∅8 x 40 mm	∅15 x 9 mm	

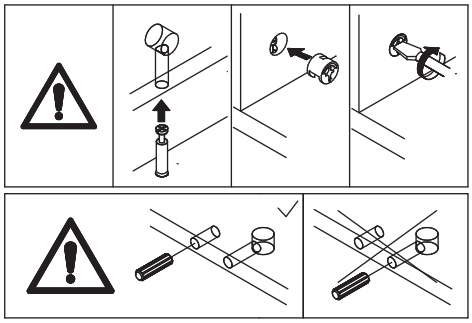

Connect wooden board 8 to wooden boards 11, 12, and 14 using dowel B, then insert eccentric cam Q and tighten.

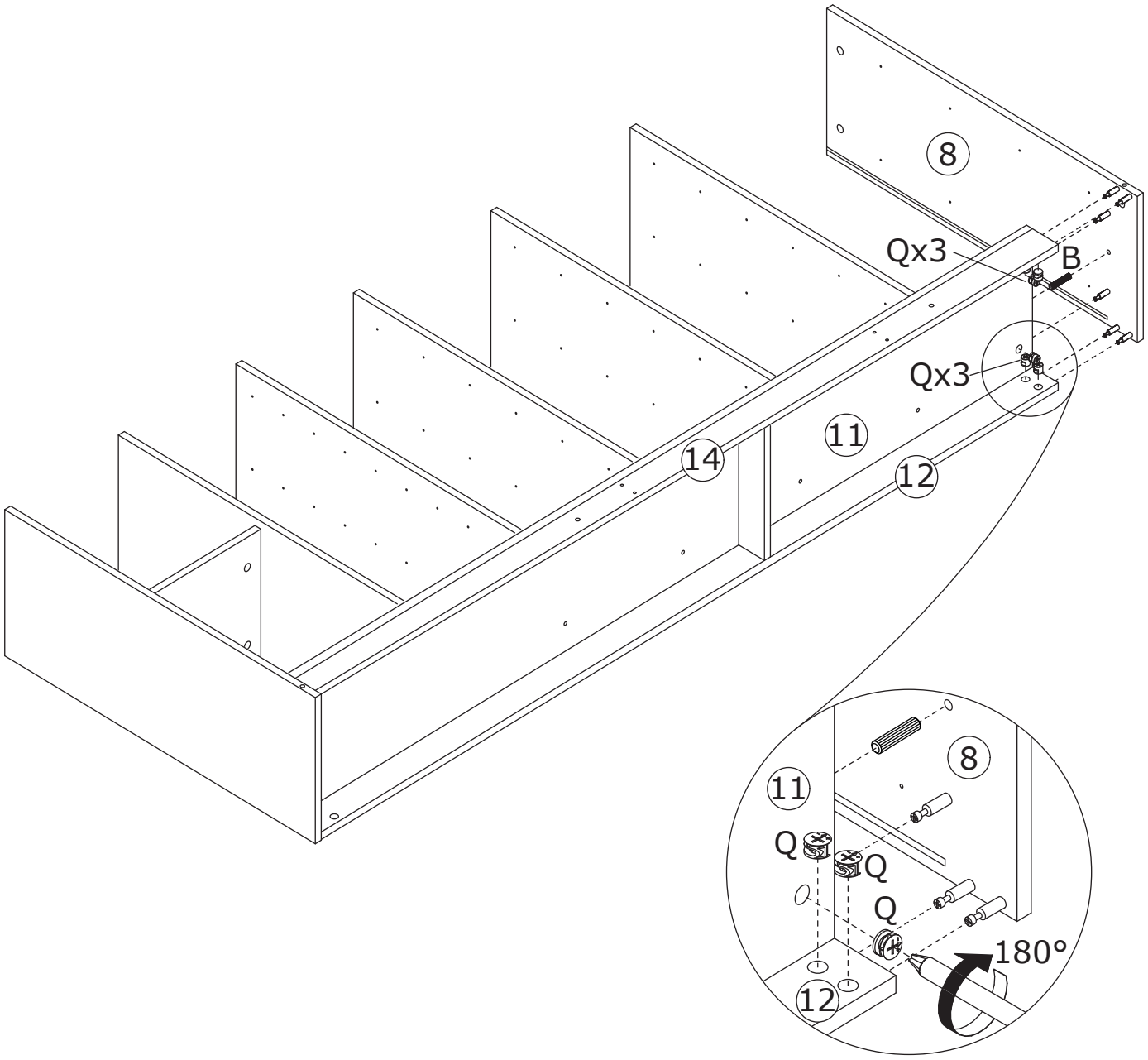

13

A x 2

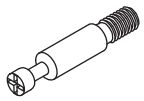

∅6 x 35 mm

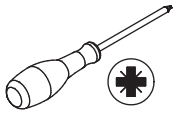

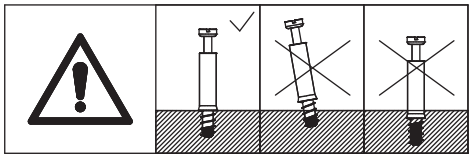

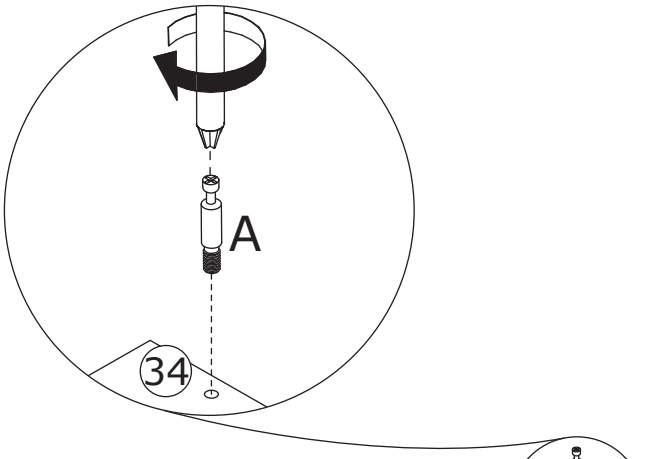

Install screw rod A onto wooden board 34.

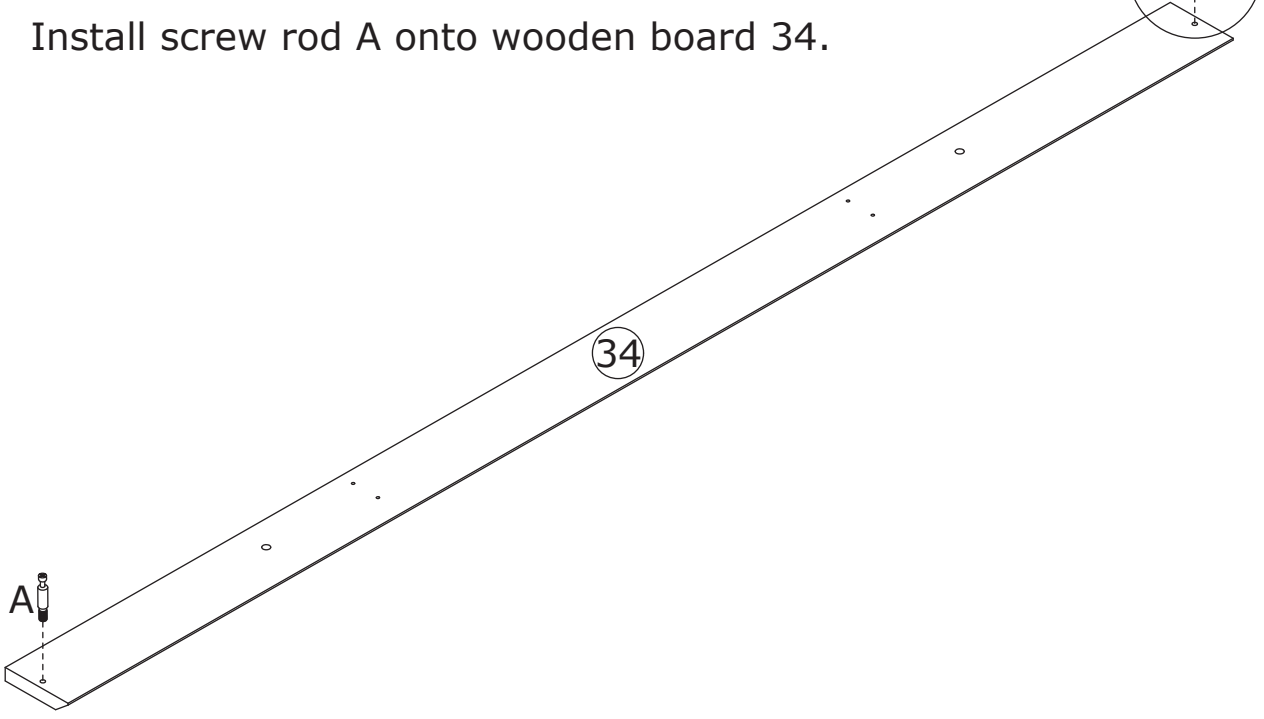

14

C x 2	I x 4	Q x 2	
	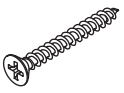		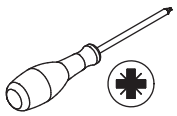
∅8 x 20 mm	∅4 x 25 mm	∅15 x 9 mm	

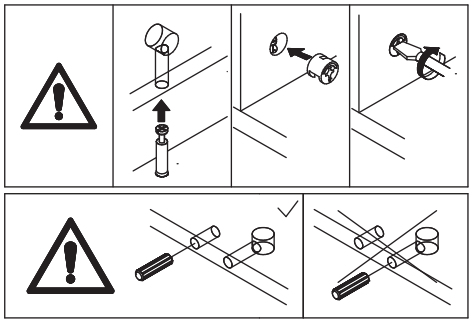

Connect wooden boards 14 and 34 using dowel C, secure with screw I, then insert eccentric cam Q and tighten.

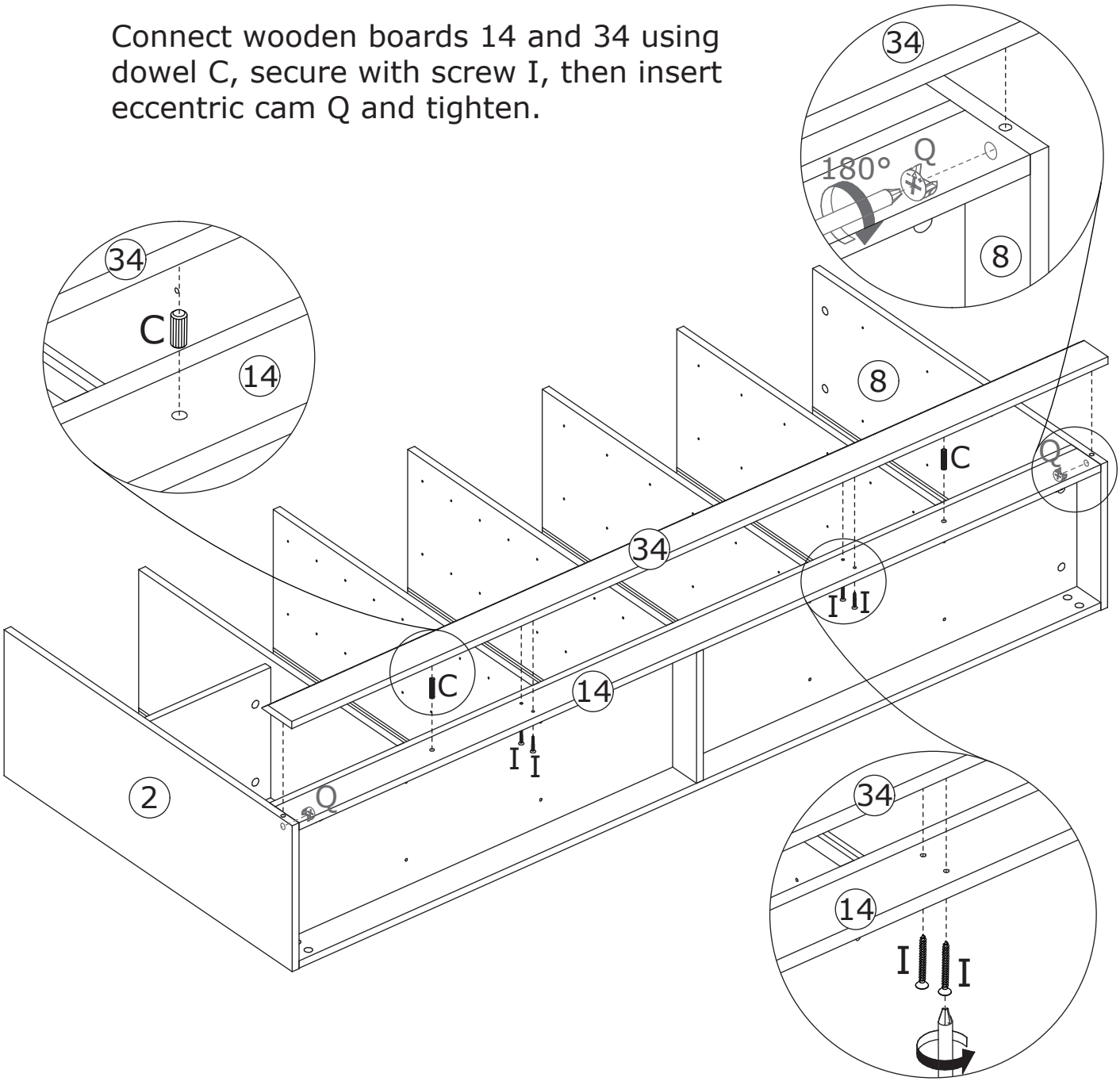

15

Insert wooden boards 30, 31, and 33 into the slots of the assembled cabinet body.
(Pay attention to the installation direction of wooden boards 31 and 33.)

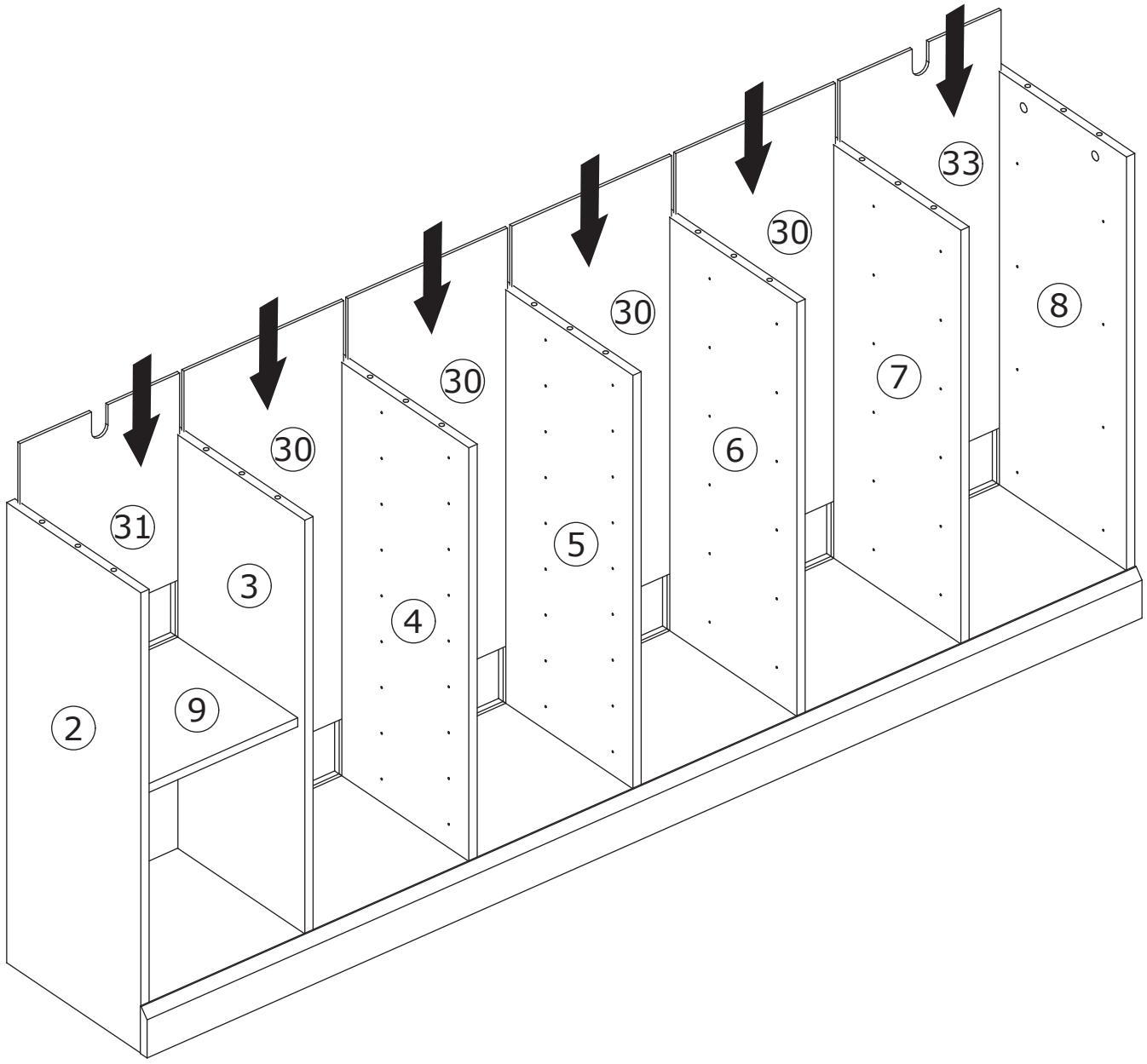

16

A x 14	R x 2	
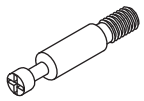 ∅6 x 35 mm	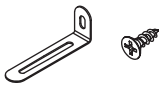	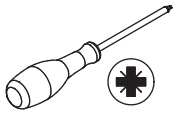

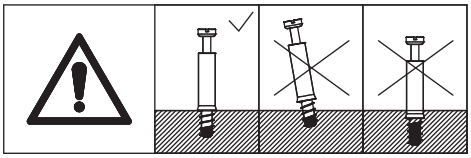

Install screw rod A onto wooden board 1, then attach the iron plate to wooden board 1 using the screws from accessory R.

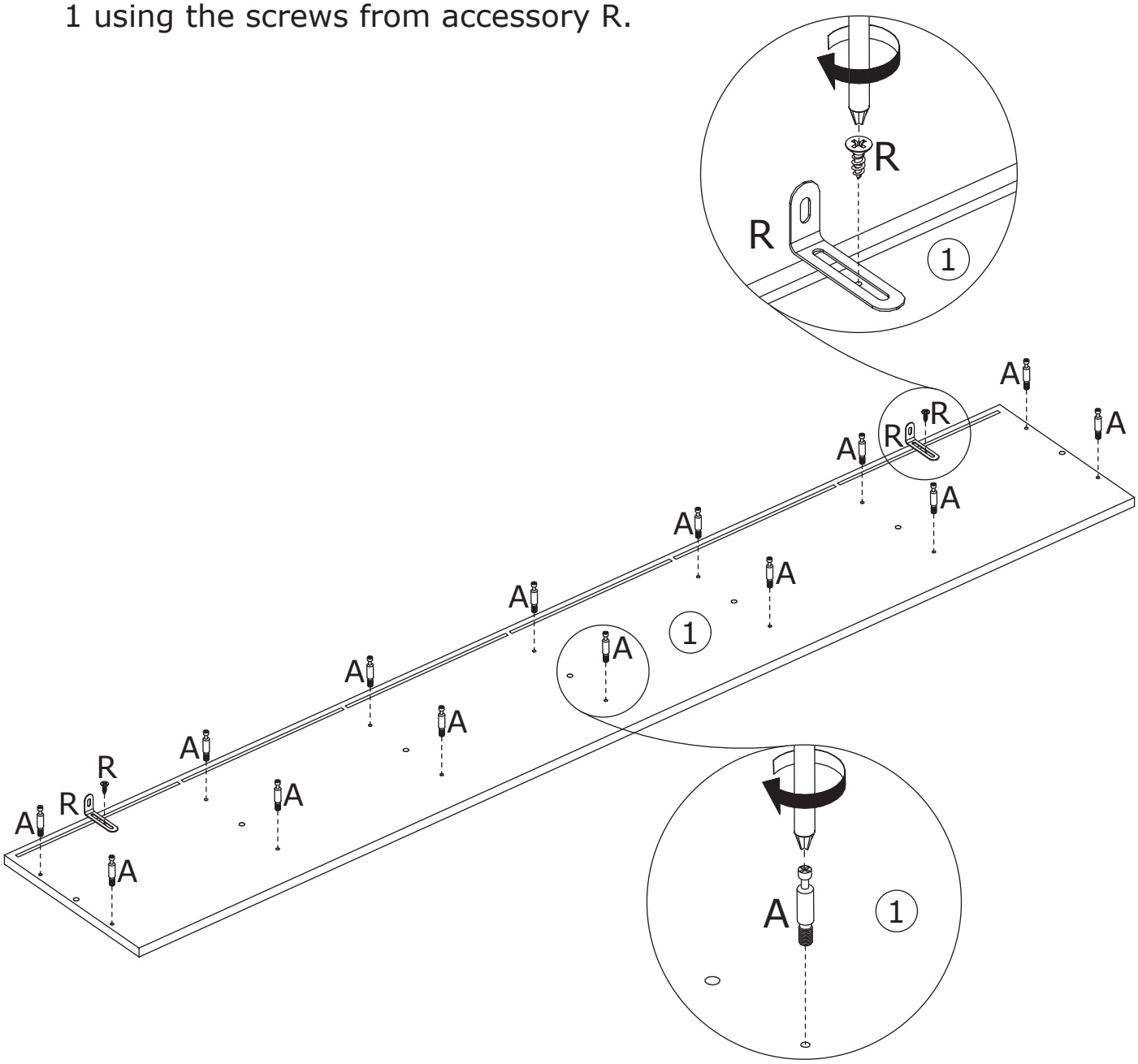

17

B x 7	Q x 14	
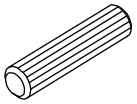		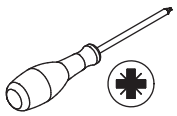
∅8 x 40 mm	∅15 x 9 mm	

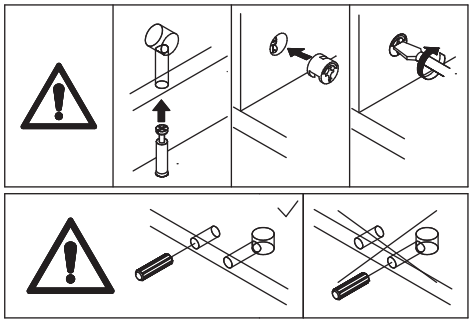

Connect wooden board 1 to wooden boards 2, 3, 4, 5, 6, 7, and 8 using dowel B, then insert eccentric cam Q and tighten.

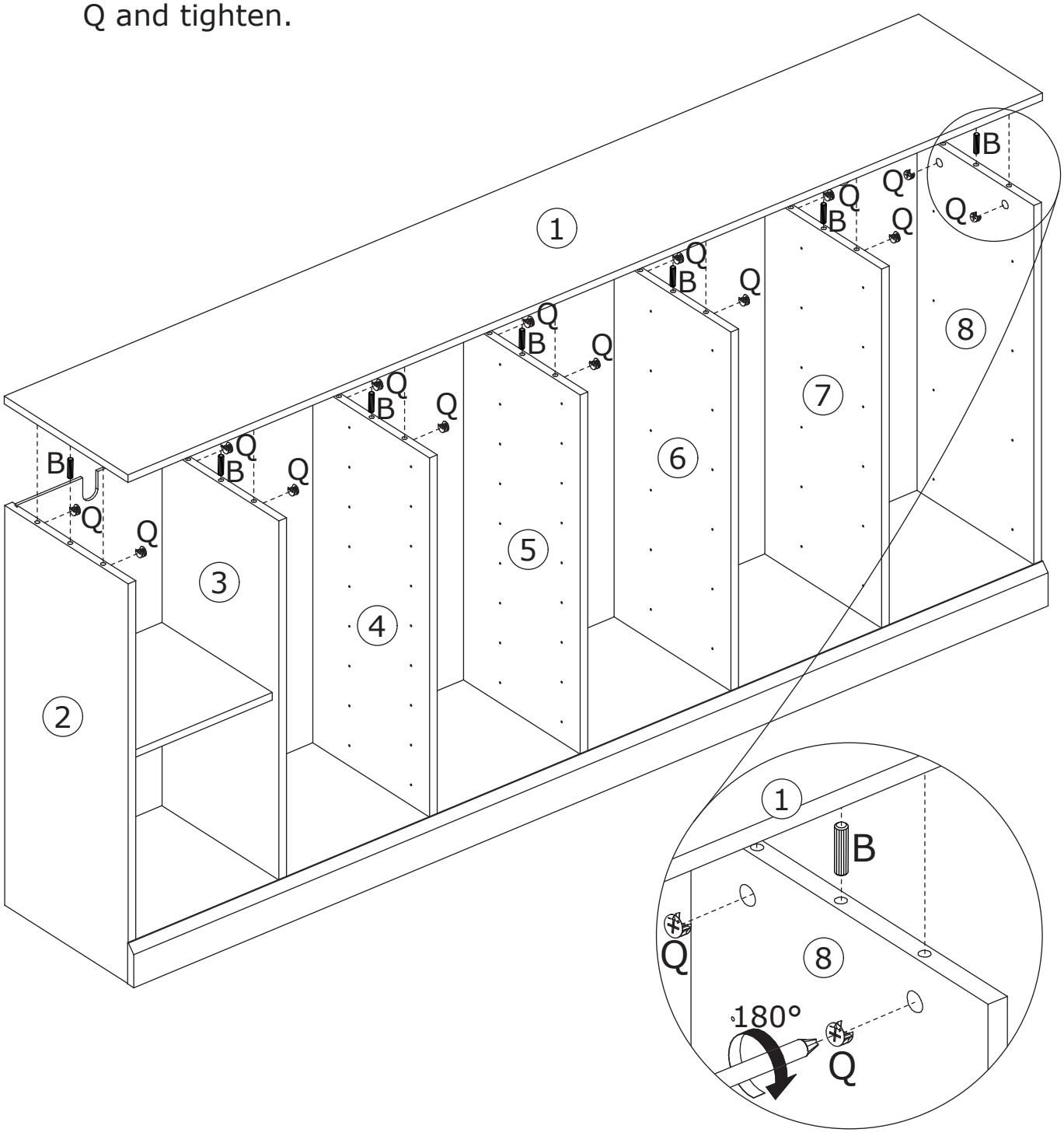

18

T x 34

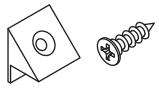

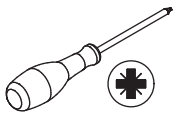

Install back panel clips T on all four sides of wooden boards 30, 31, and 33.

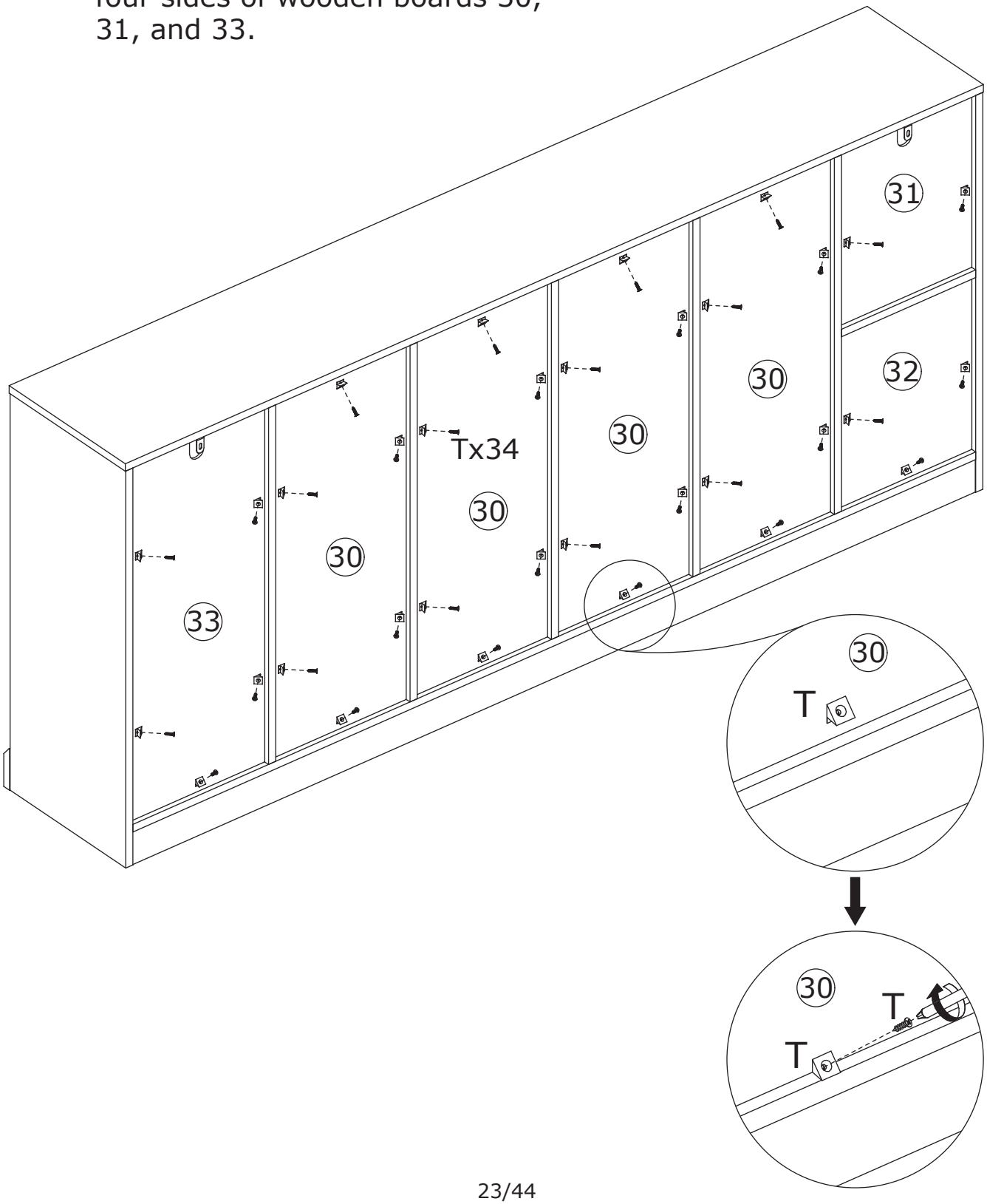

19

J x 38	L x 4	M x 15	
∅3.5 x 12 mm	CR		

Fix slide rail L (CR part) and slide rail M (M1 part) to wooden boards 4, 6, and 8 using screw J.

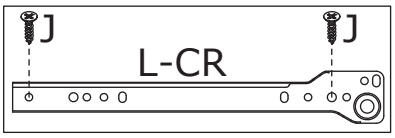

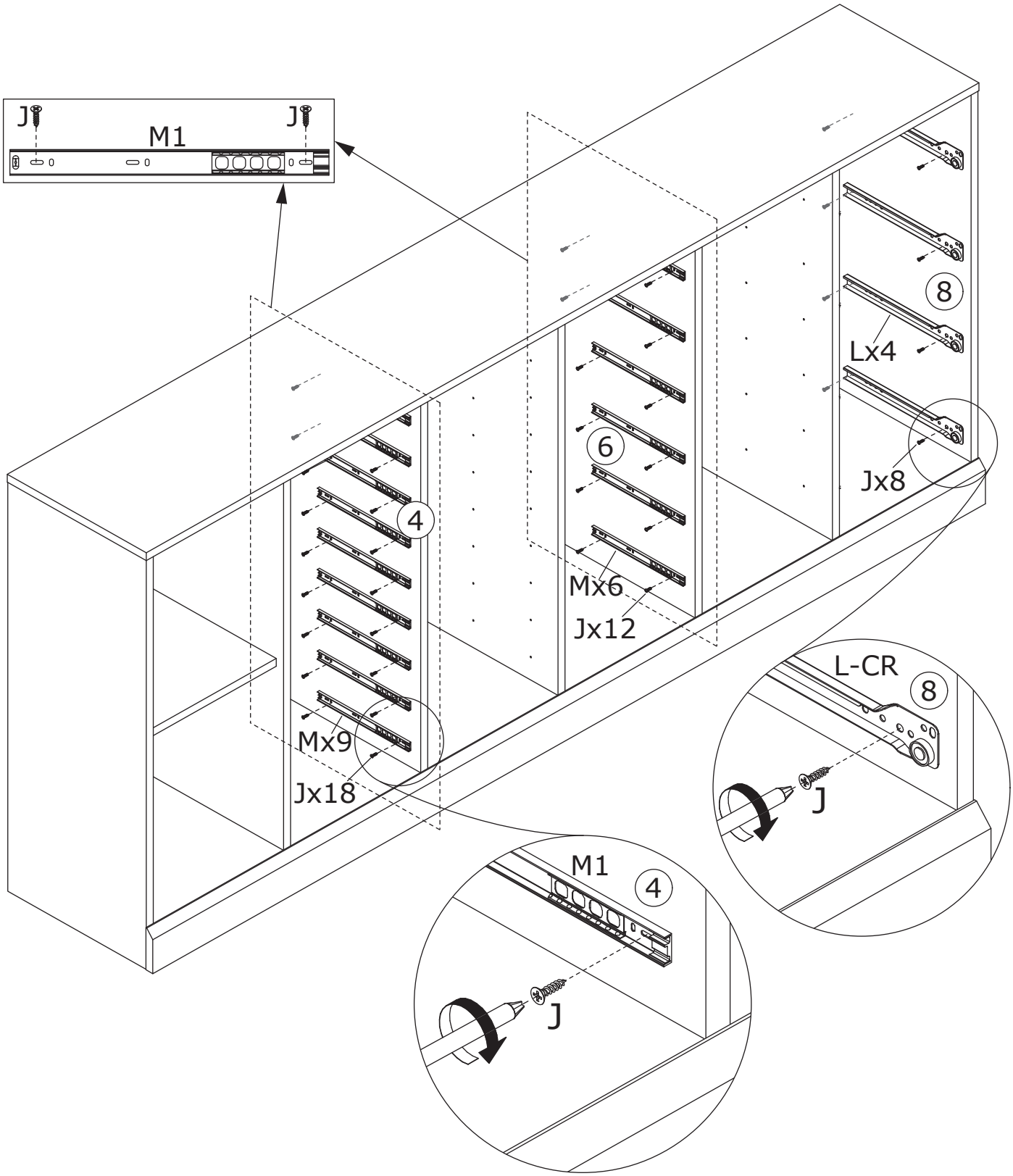

20

J x 30	M x 15	
 ∅3.5 x 12 mm	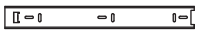	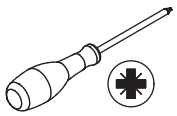

Fix slide rail M (M1 part) to wooden boards 5,7 using screw J.

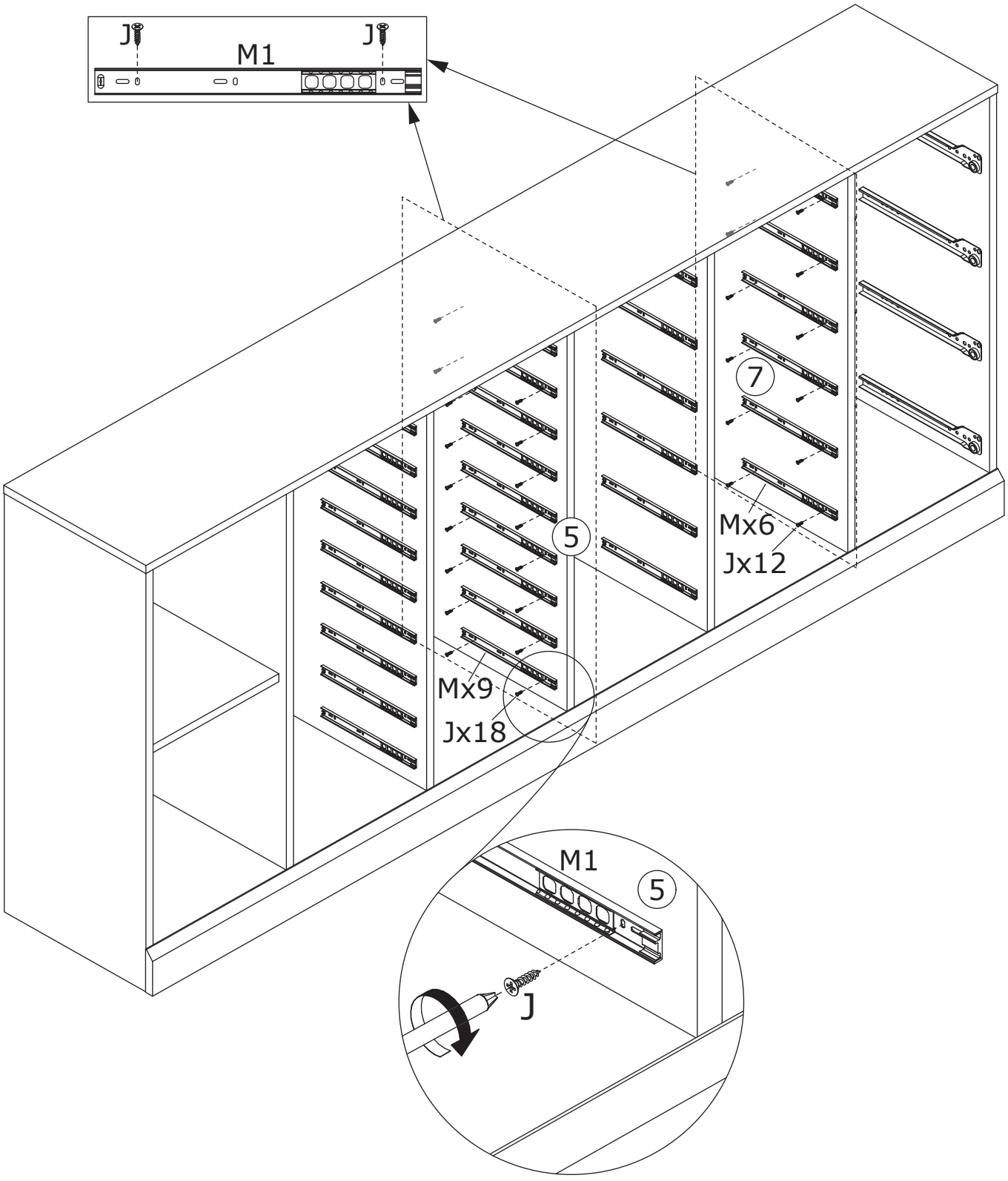

21

J x 68	L x 4	M x 30	
 ∅3.5 x 12 mm	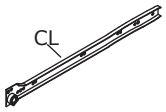 CL	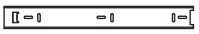 M1	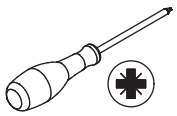

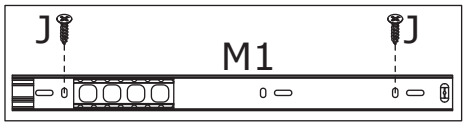

Fix slide rail L (CL part) and slide rail M (M1 part) to wooden boards 3, 4, 5, 6, and 7 using screw J.

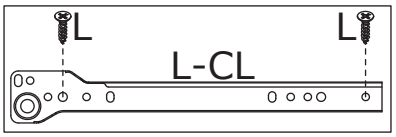

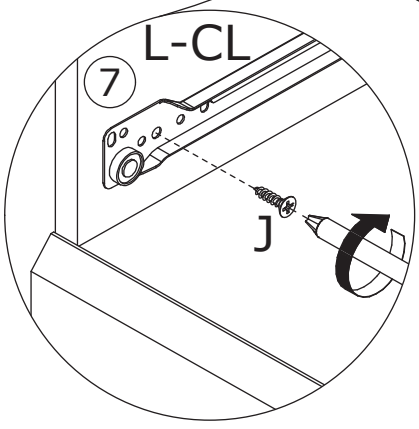

22

R x 2



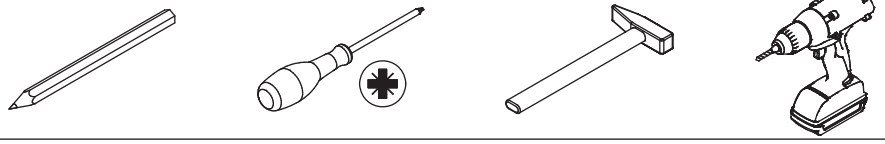

If wall mounting is required, install the anti-tipping device R as shown.

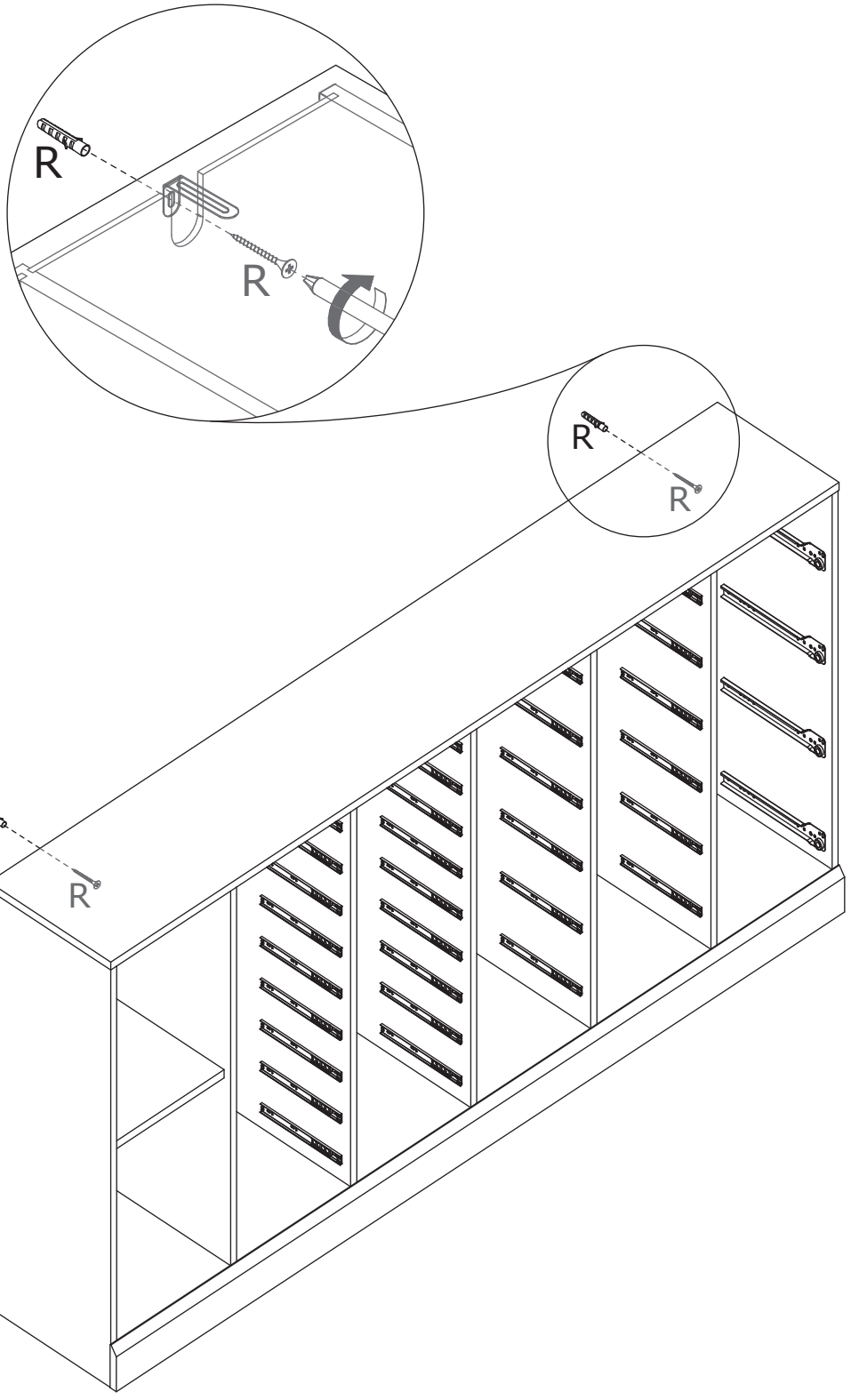

1.

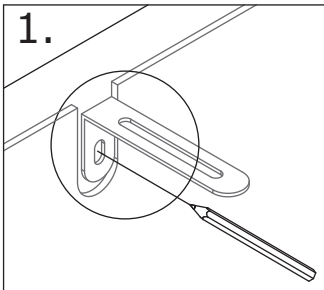

2.

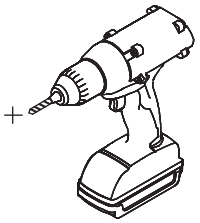

3.

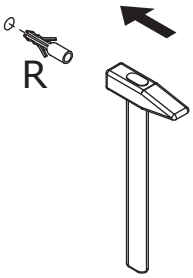

4.

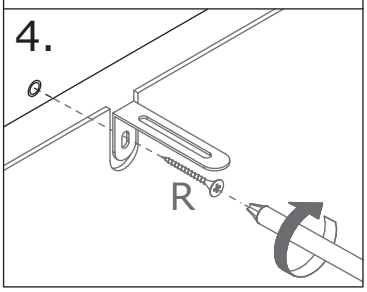

23

D x 4	G x 2	J x 8	P x 2	
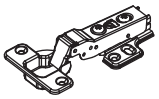		 ∅3.5 x 12 mm	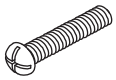 ∅4 x 18 mm	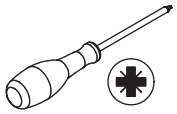

Secure hinge D to wooden board 10 using screw J, and fix handle G to wooden board 10 using screw P.

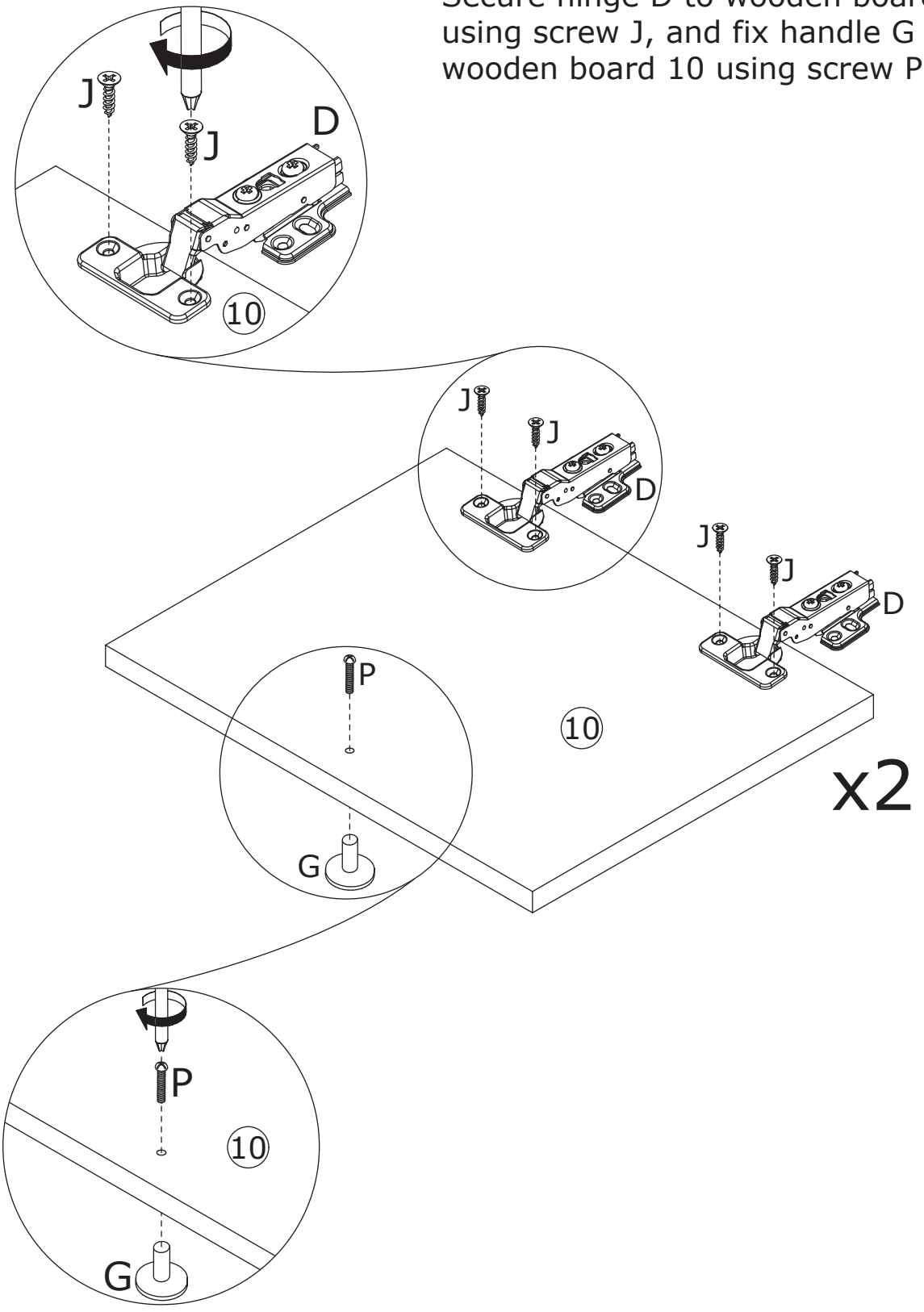

24

J x 16



∅3.5 x 12 mm

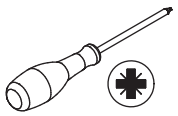

Secure hinge D to wooden board 2 using screw J.

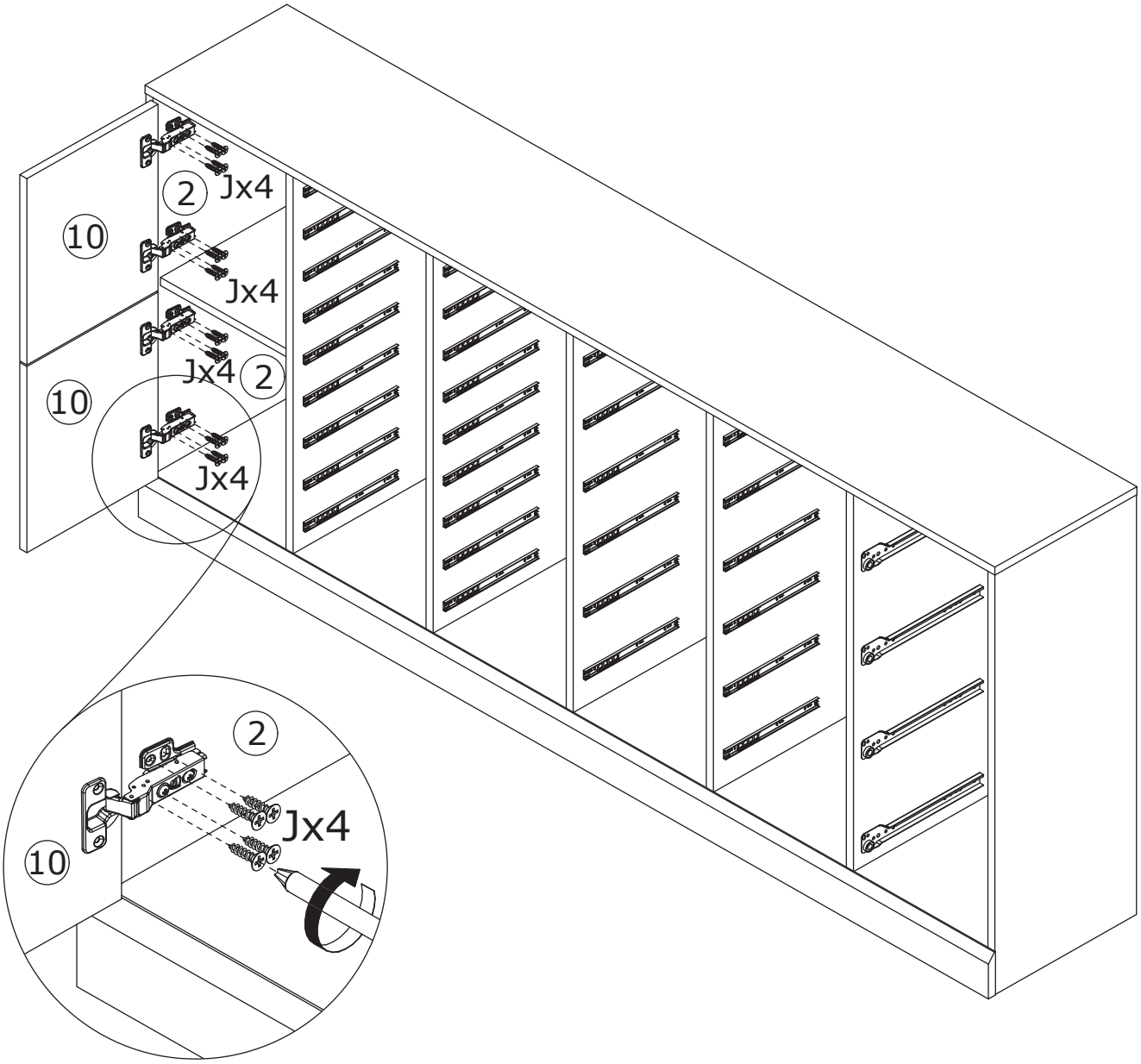

25

A x 90

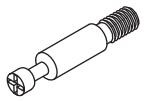

∅6 x 35 mm

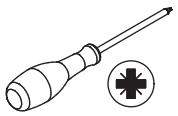

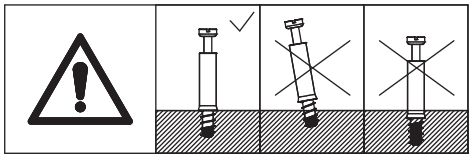

Install screw rod A onto wooden boards 15, 16, and 17.

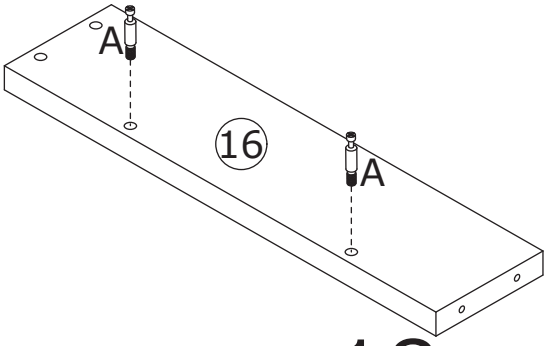

x18

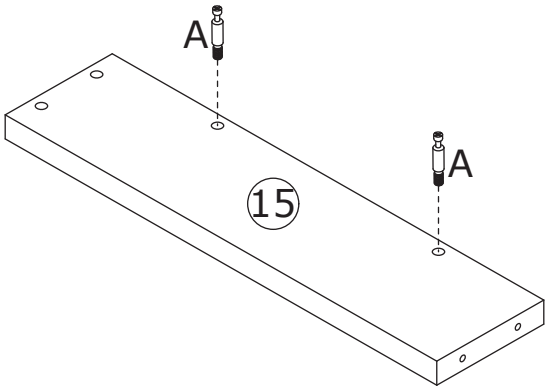

x18

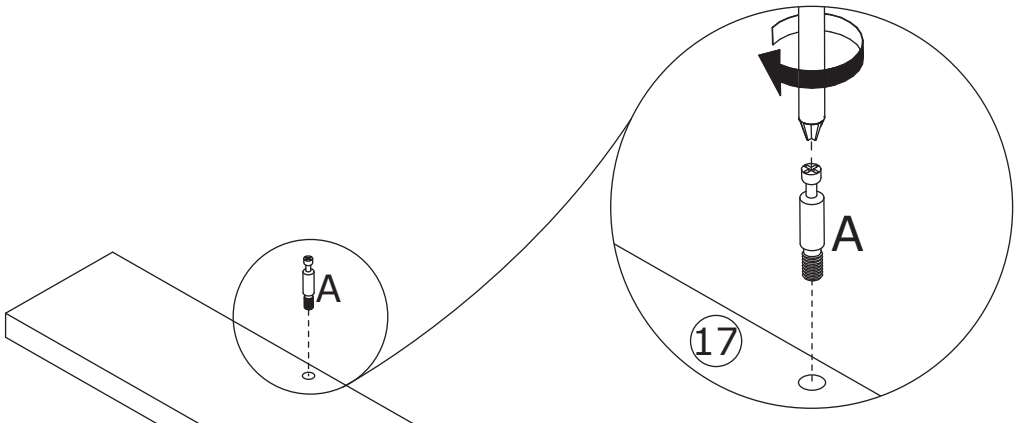

x18

26

Q x 90



∅15 x 9 mm

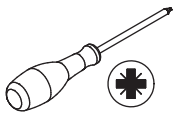

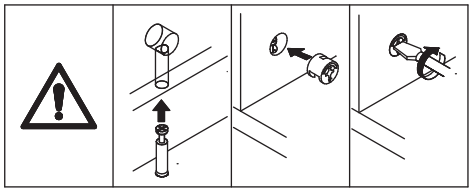

Connect wooden boards 15, 16, 17, and 18, then insert and tighten the eccentric cam Q.

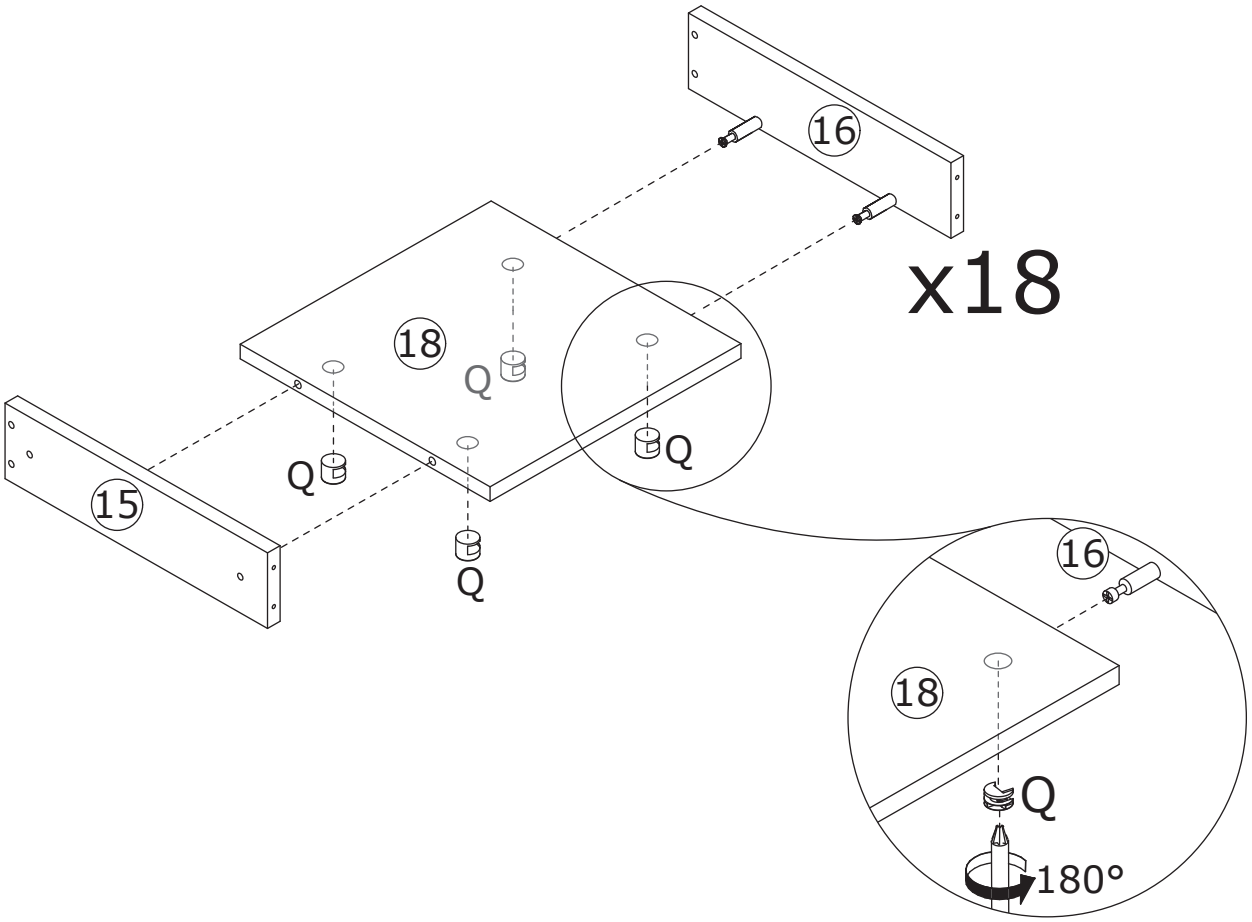

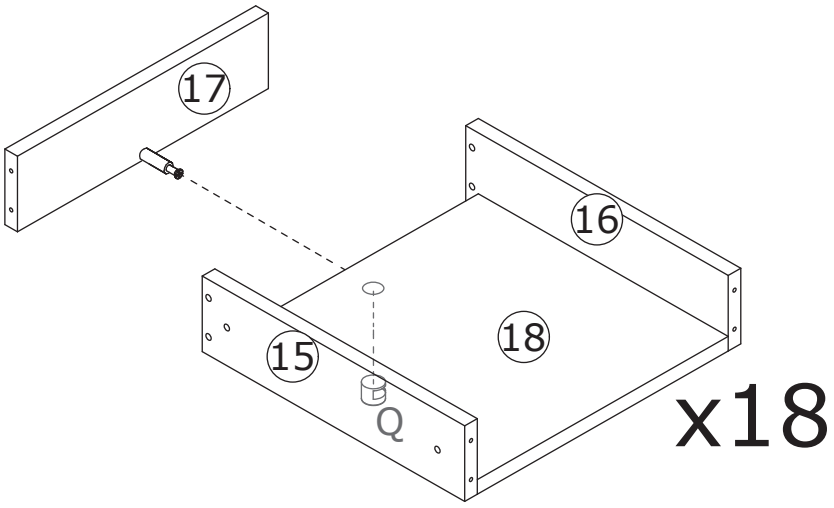

27

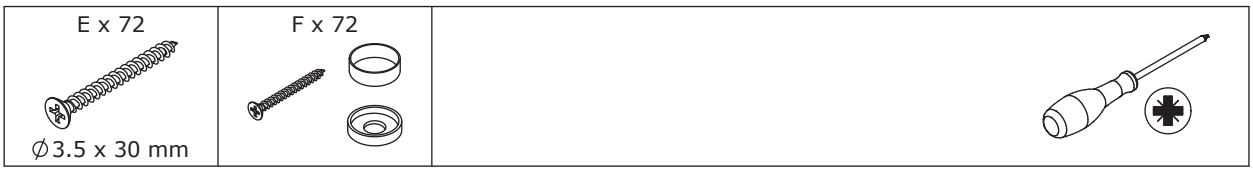

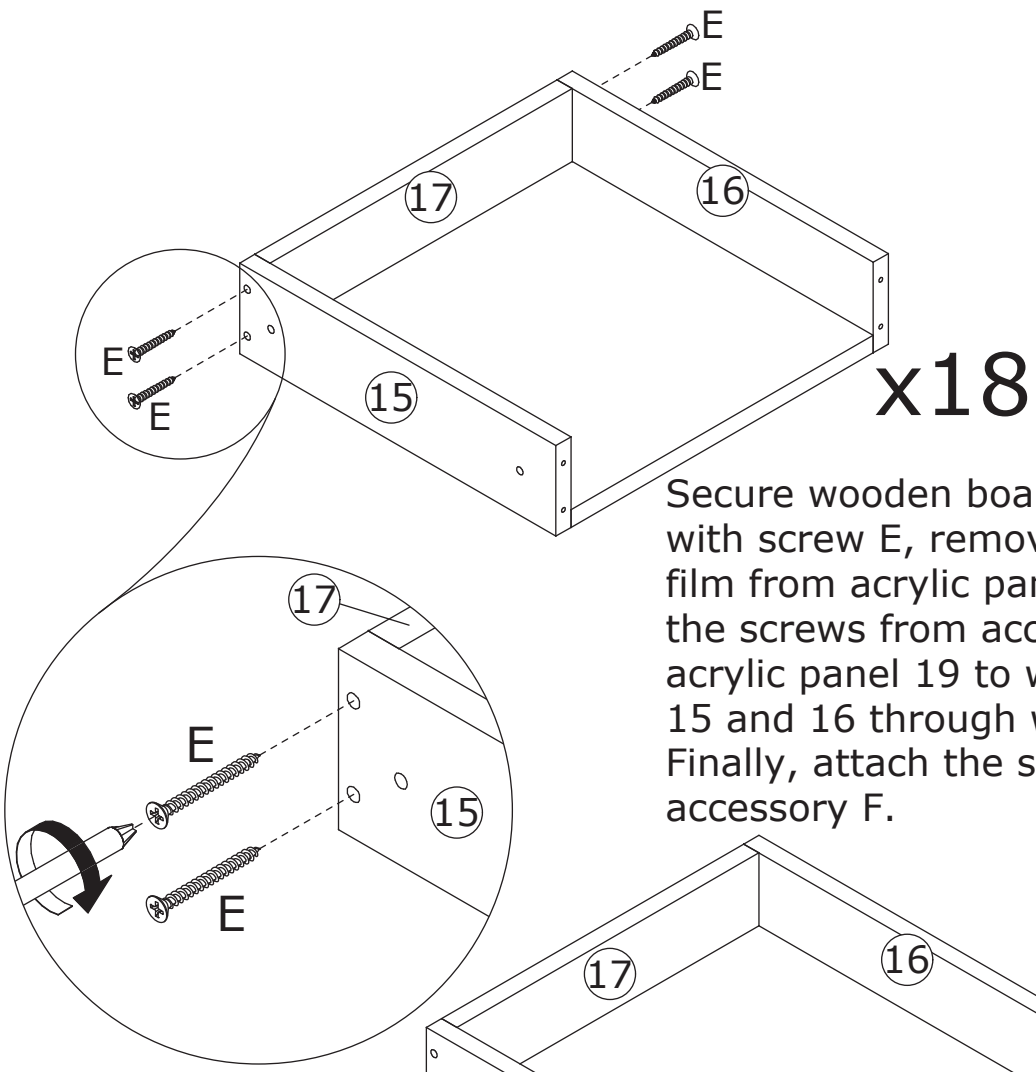

Secure wooden boards 15, 16, and 17 with screw E, remove the protective film from acrylic panel 19. Then, using the screws from accessory F, fasten acrylic panel 19 to wooden boards 15 and 16 through washers. Finally, attach the screw caps from accessory F.

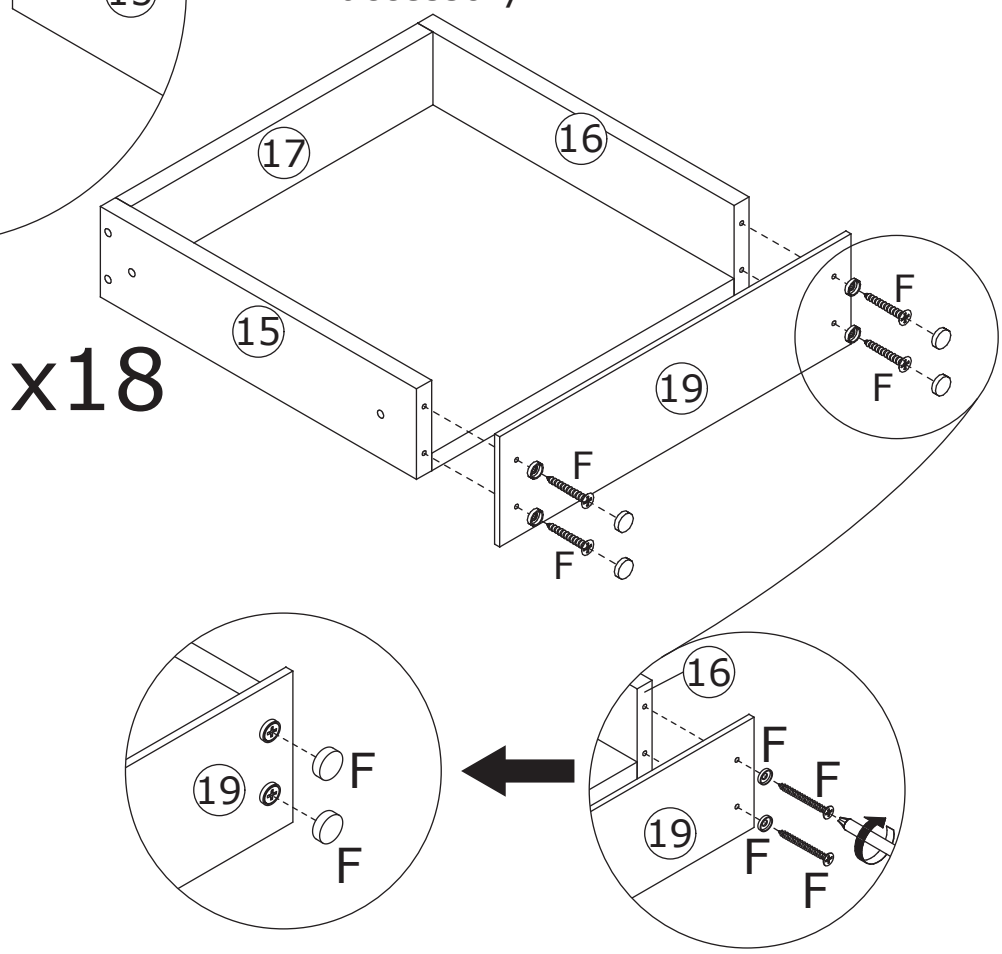

28

J x 72	M x 36	N x 18	O x 18	S x 18	
 ∅3.5 x 12 mm	 M2		 ∅4 x 8 mm		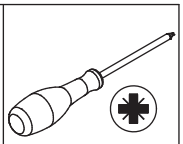

Fix slide rail M2 to wooden boards 15 and 16 using screw J. Then, attach handle N to acrylic panel 19 using screw O through washers S.

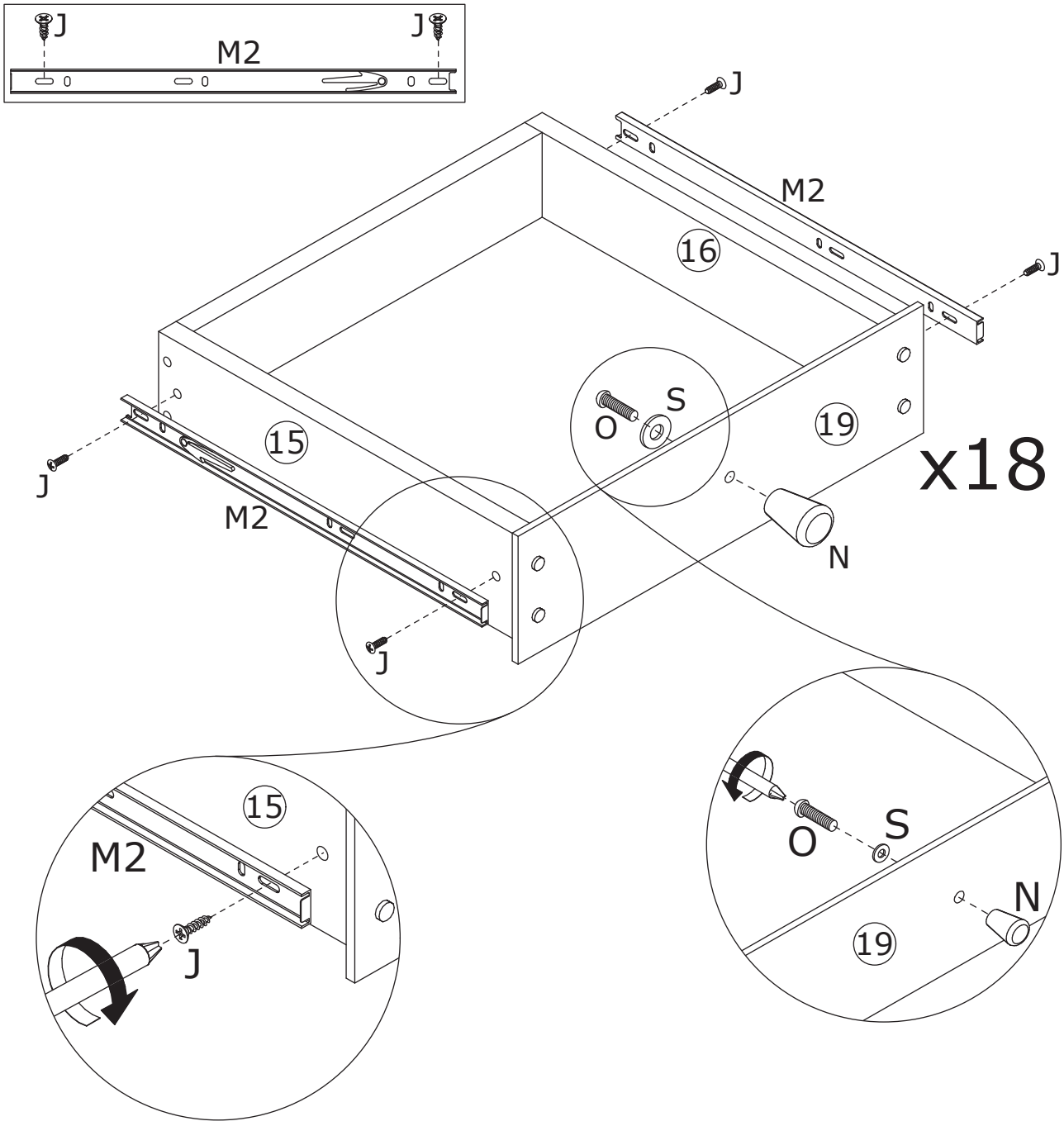

29

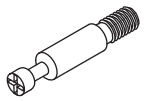

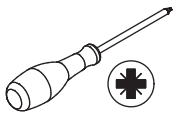

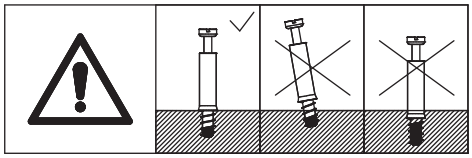

Install screw rod A onto wooden boards 20, 21, and 22.

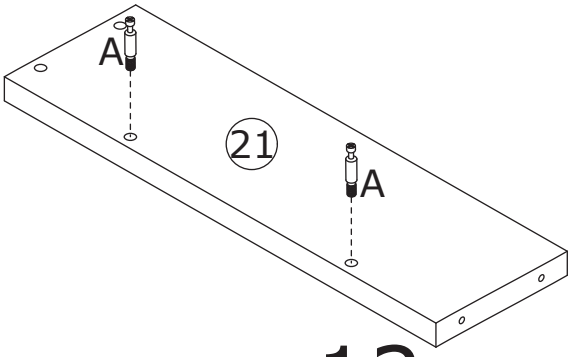

x12

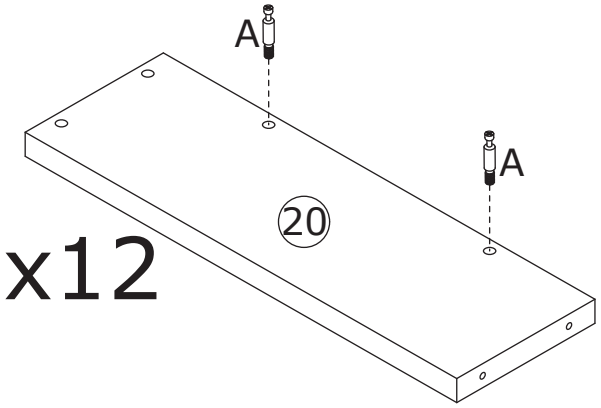

x12

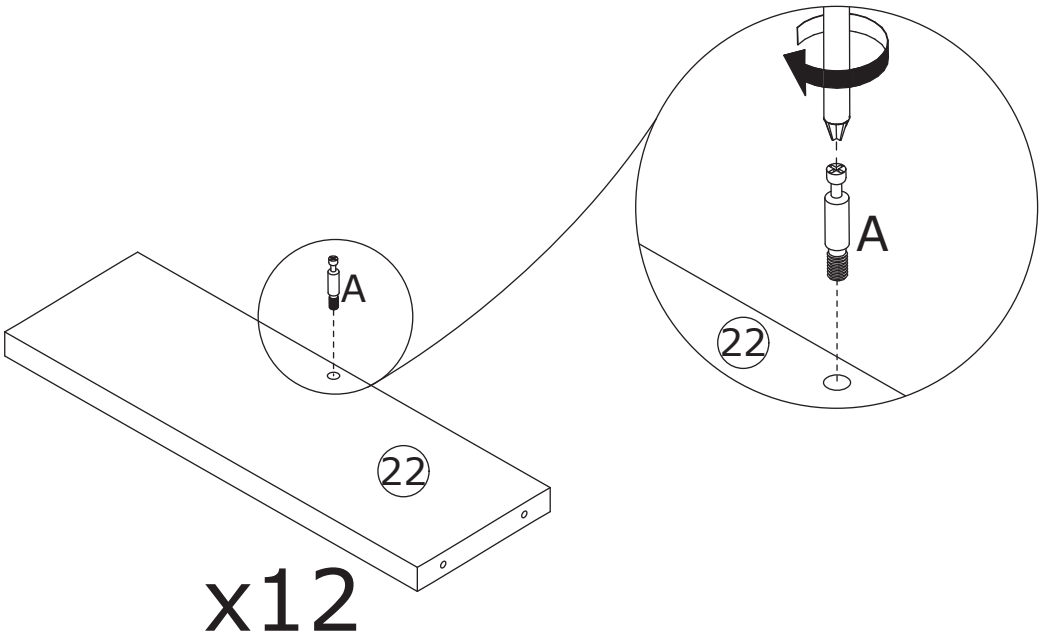

x12

30

Q x 60



∅15 x 9 mm

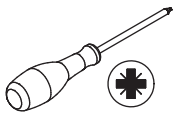

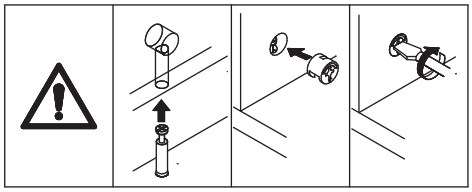

Connect wooden boards 20, 21, 22, and 23, then insert and tighten the eccentric cam Q.

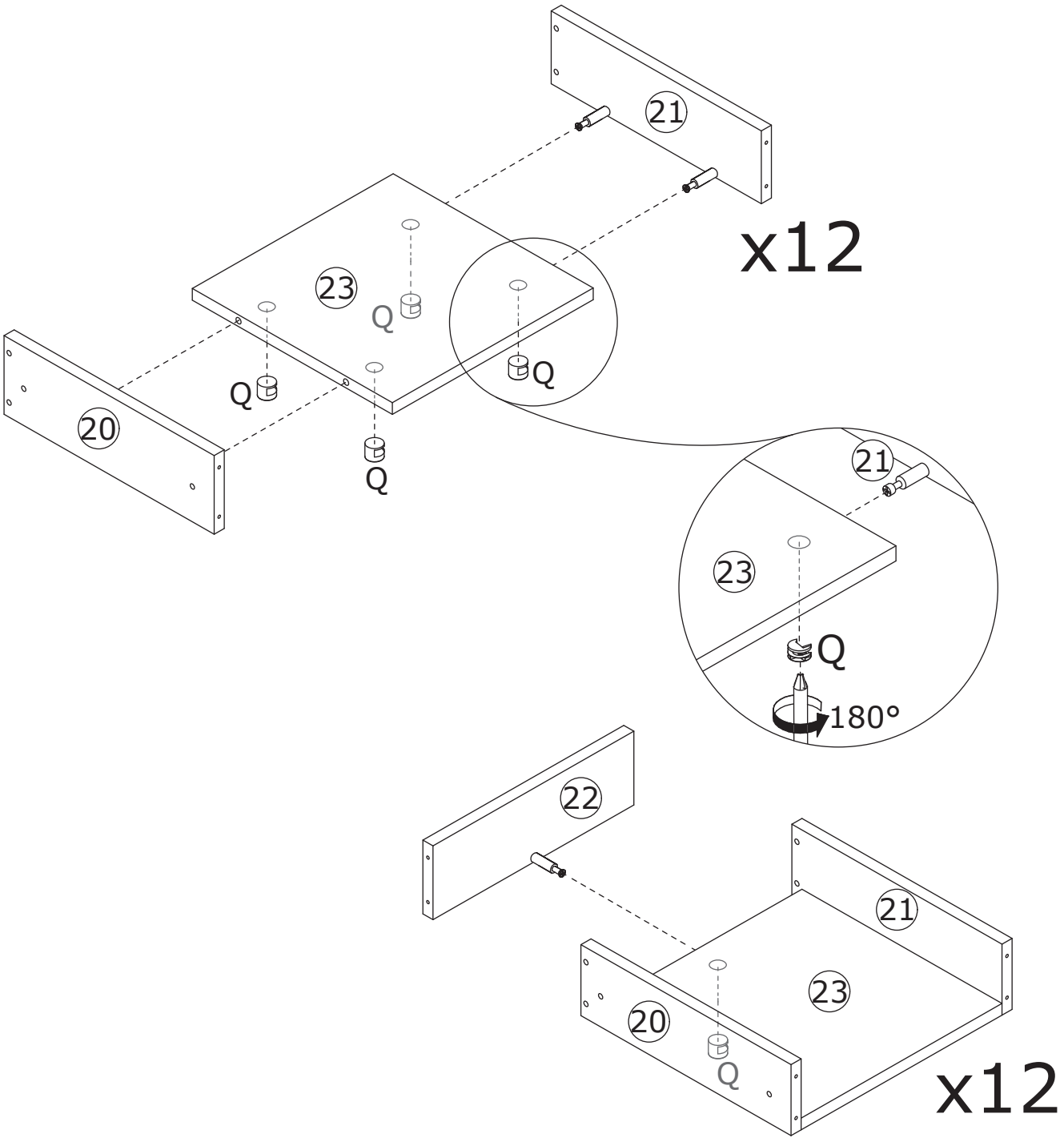

31

E x 48



∅3.5 x 30 mm

F x 48

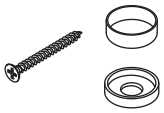

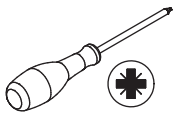

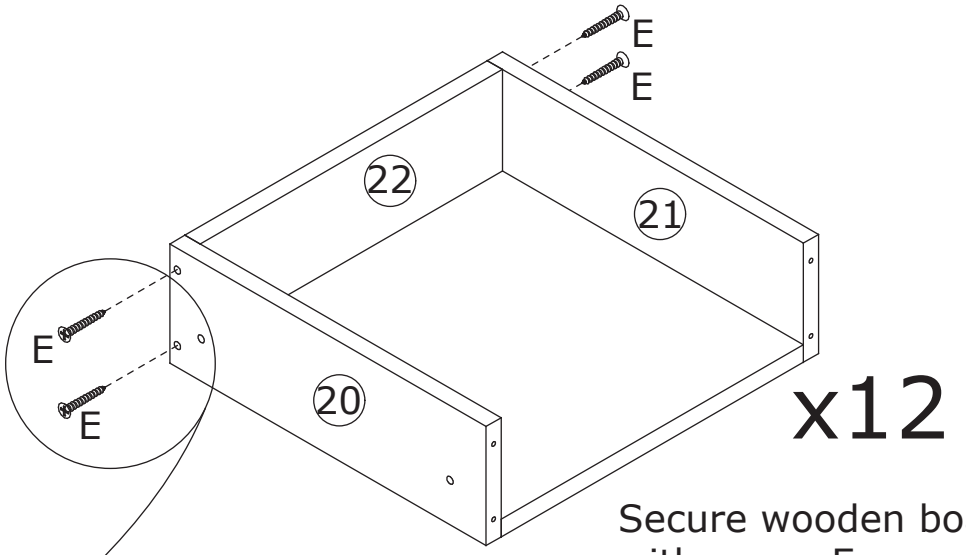

x12

Secure wooden boards 20, 21, and 22 with screw E, remove the protective film from acrylic panel 24. Then, using the screws from accessory F, fasten acrylic panel 24 to wooden boards 20 and 21 through washers. Finally, attach the screw caps from accessory F.

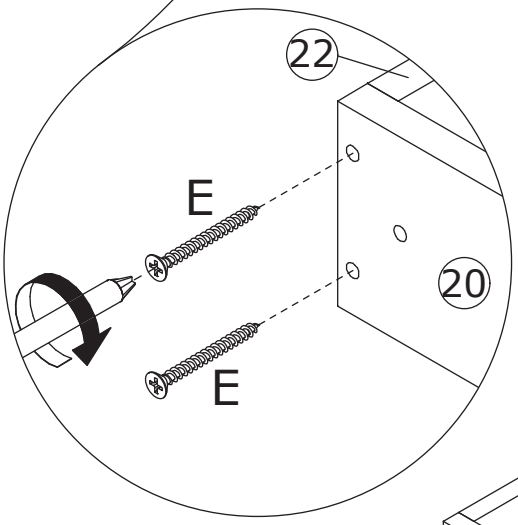

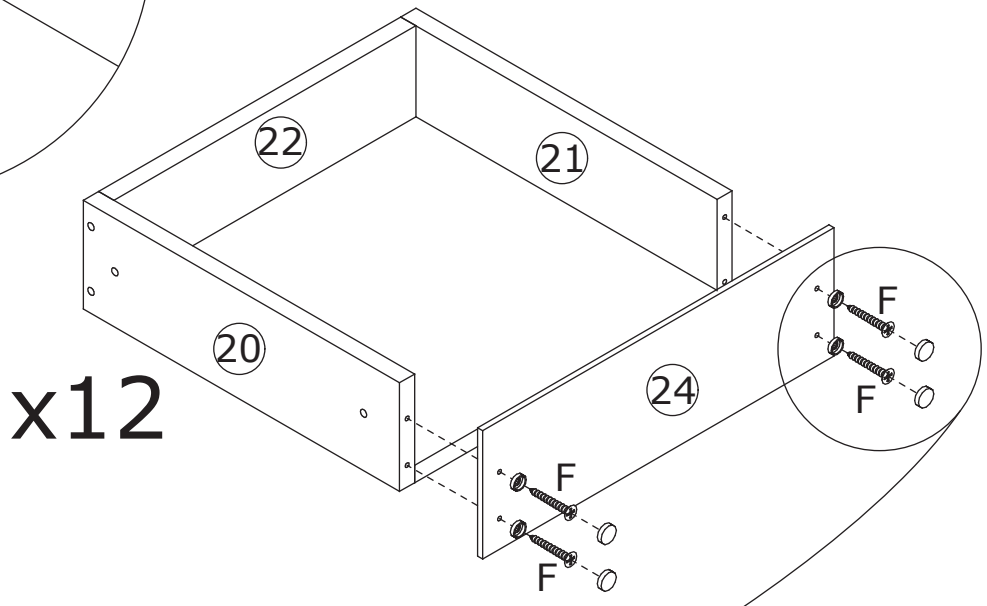

x12

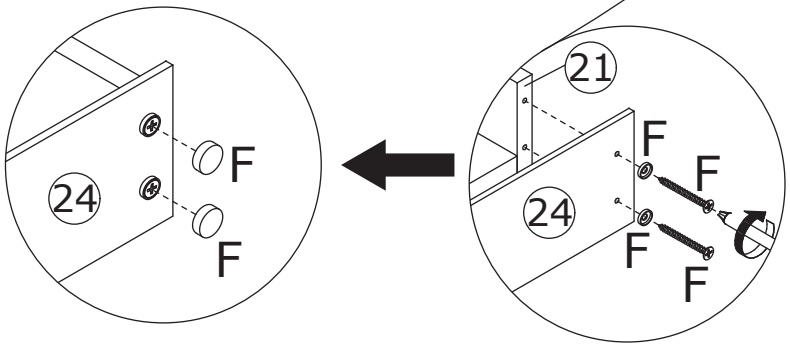

32

J x 48	M x 24	N x 12	O x 12	S x 12	
∅3.5 x 12 mm	M2		∅4 x 8 mm		

Fix slide rail M2 to wooden boards 20 and 21 using screw J. Then, attach handle N to acrylic panel 19 using screw O through washers S.

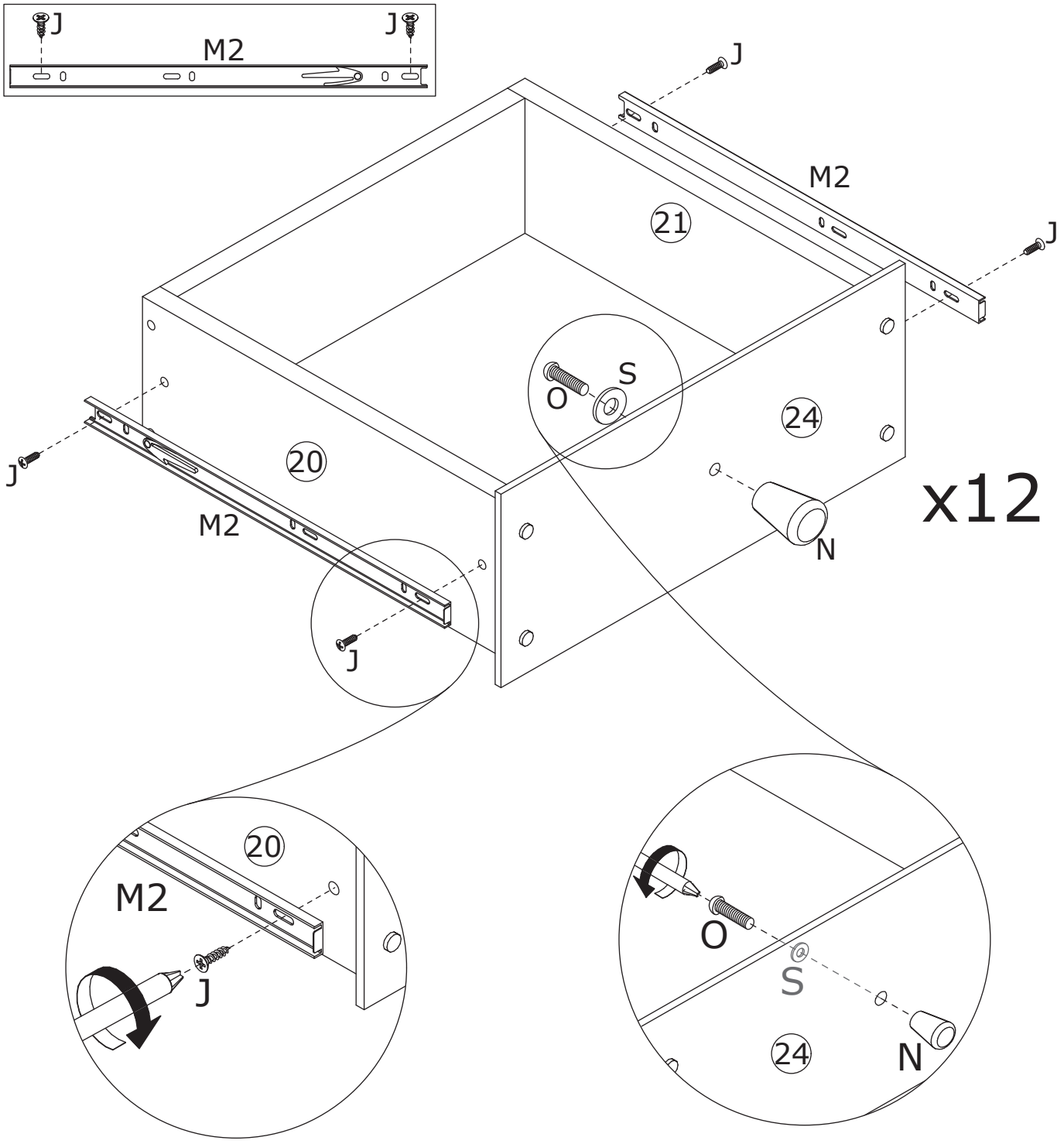

33

A x 16

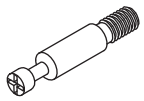

∅6 x 35 mm

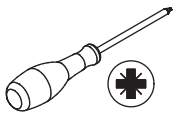

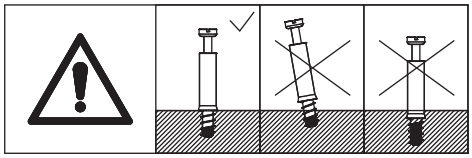

Install screw rod A onto wooden board 28.

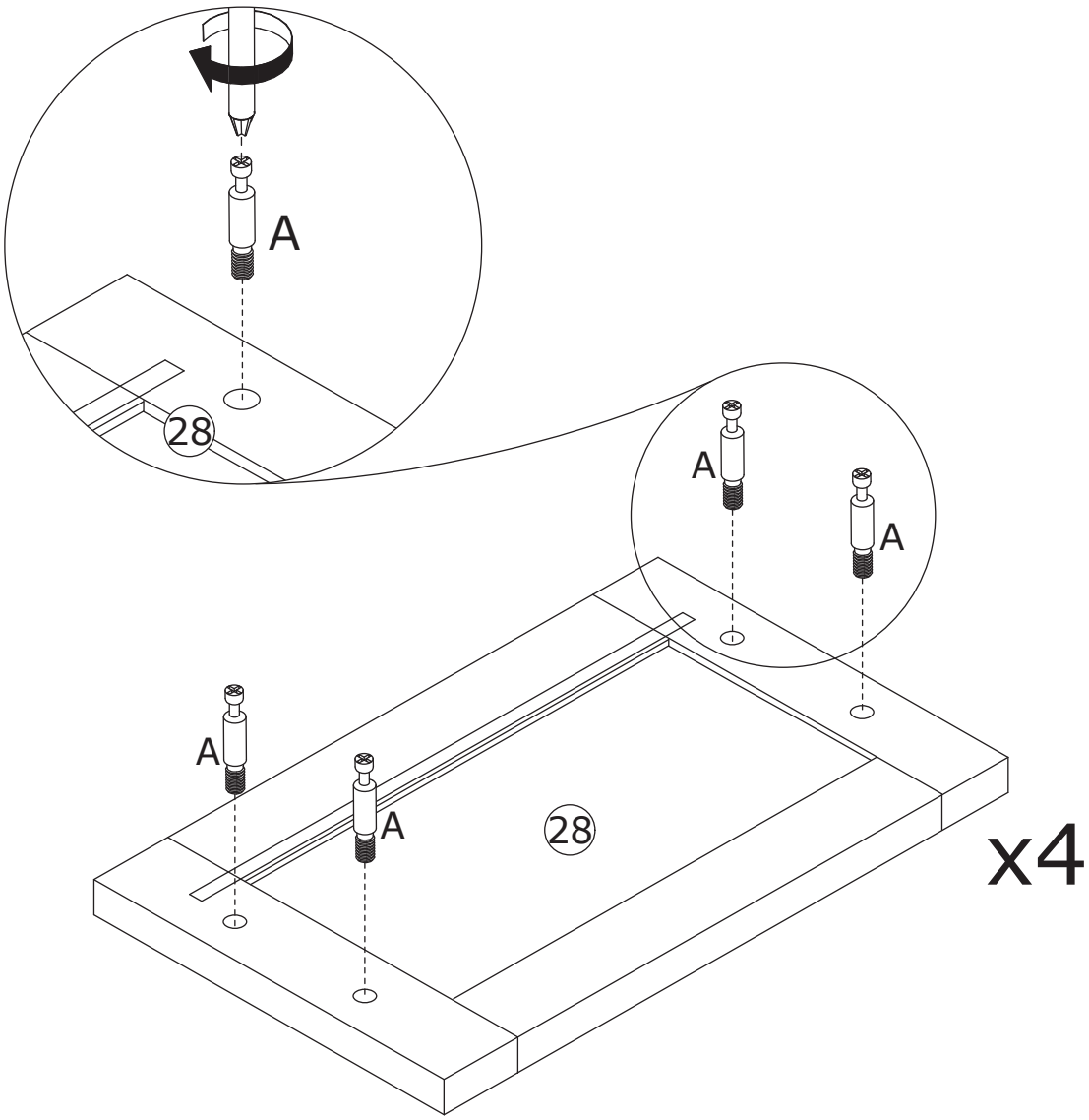

34

E x 16



∅3.5 x 30 mm

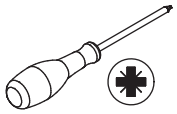

Secure wooden boards 25 and 26 to wooden board 27 using screw E.

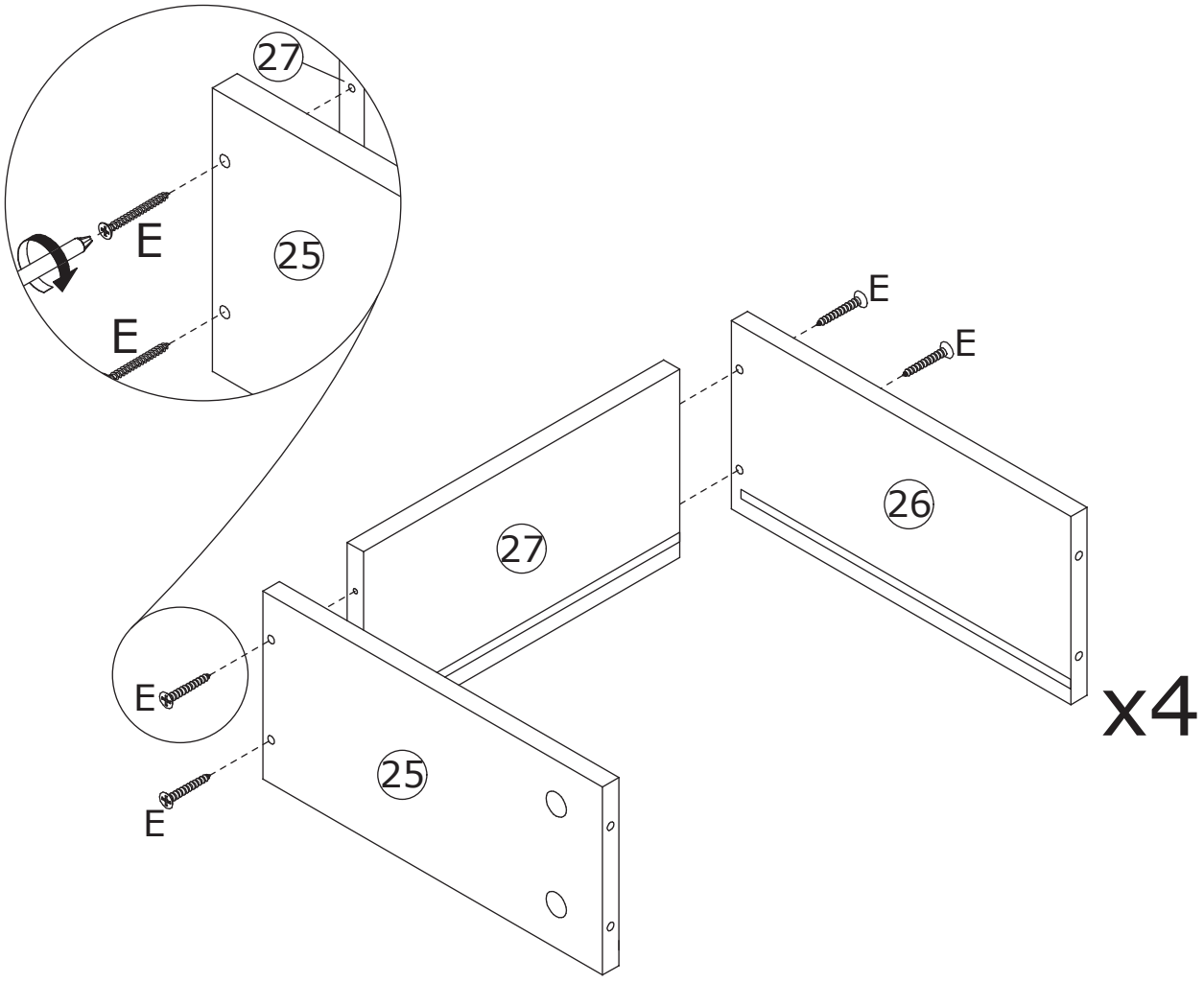

35

Insert wooden board 29 into the slots
of wooden boards 25, 26, and 27.

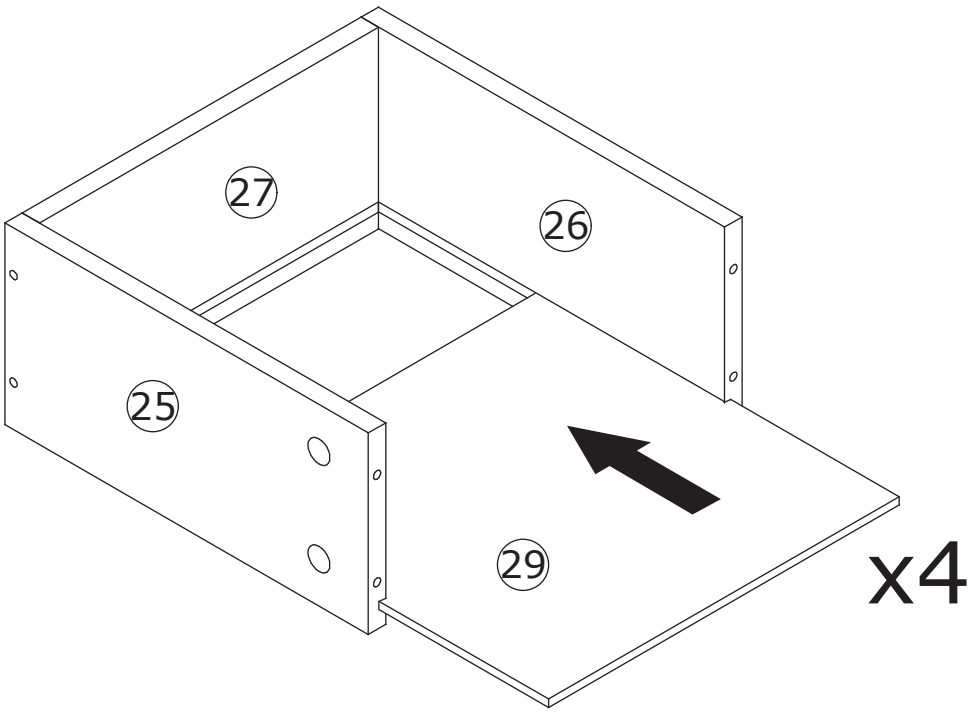

36

G x 4	O x 4	Q x 16	S x 4	
	 ∅4 x 8 mm	 ∅15 x 9 mm		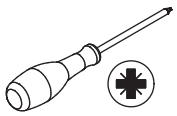

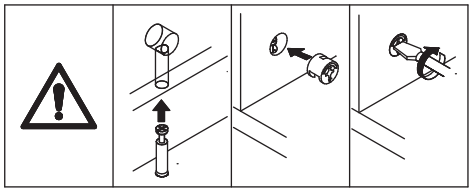

Connect wooden boards 25, 26, and 28, insert and tighten the eccentric cam Q. Attach handle G to the acrylic panel on wooden board 18 using screw O through washers S.

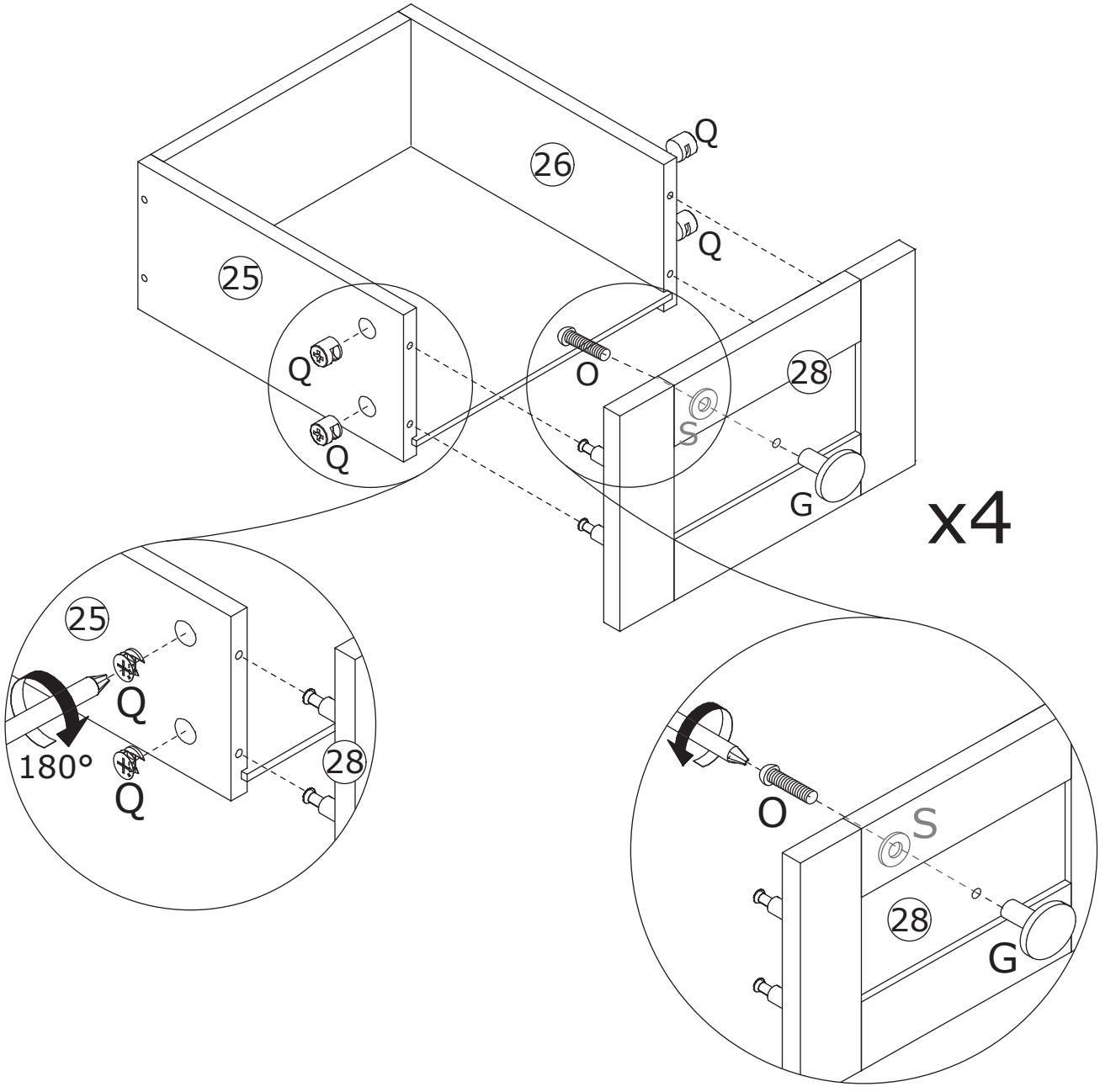

37

J x 16	L x 4	
 ∅3.5 x 12 mm	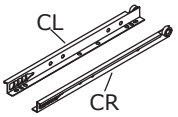	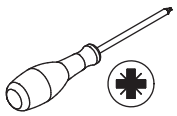

Fix slide rail L（DL and DR section）to wooden boards 25 and 26 using screw J.

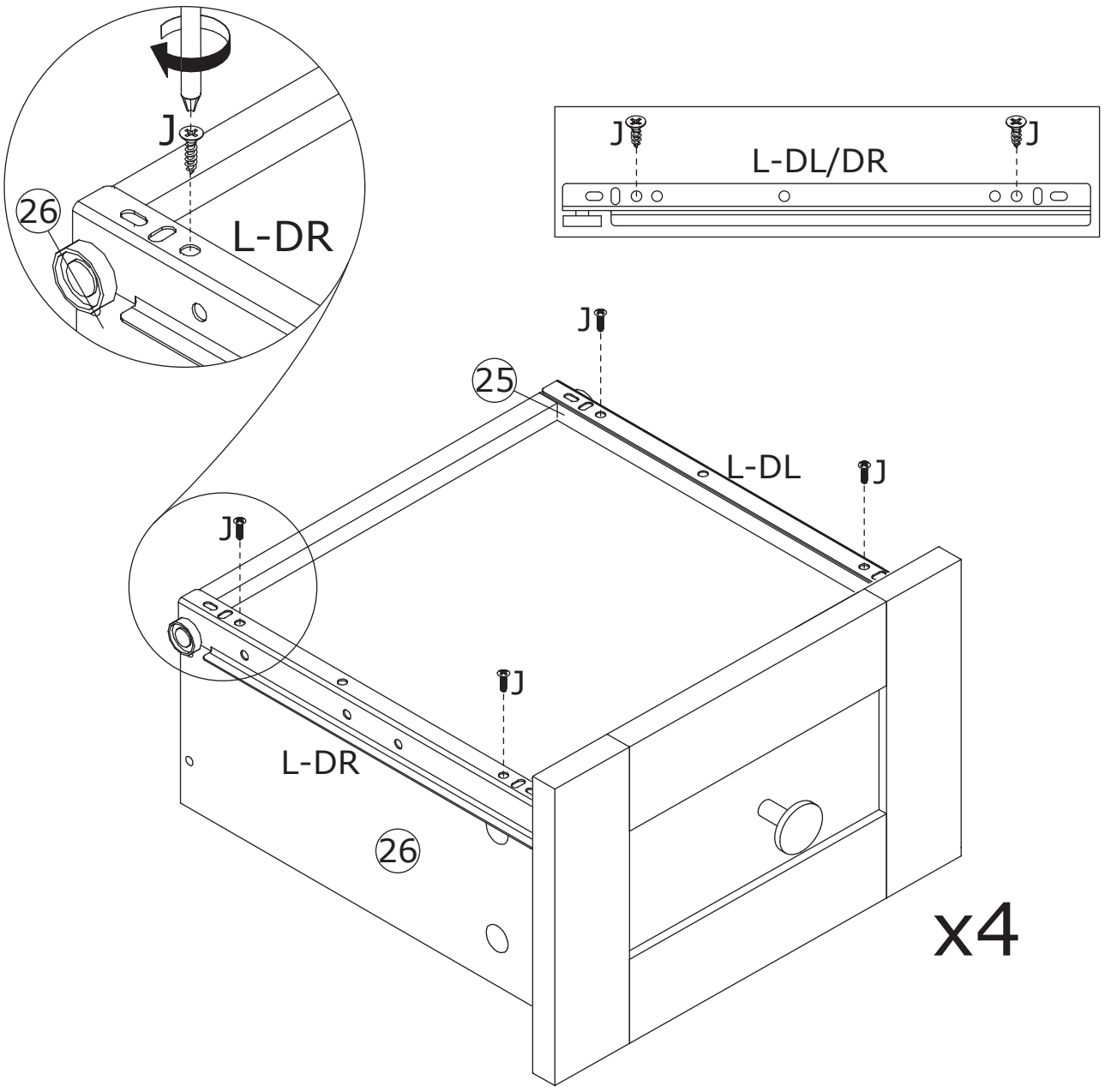

38

Slide the assembled drawer into the assembled cabinet body via the slide rails.

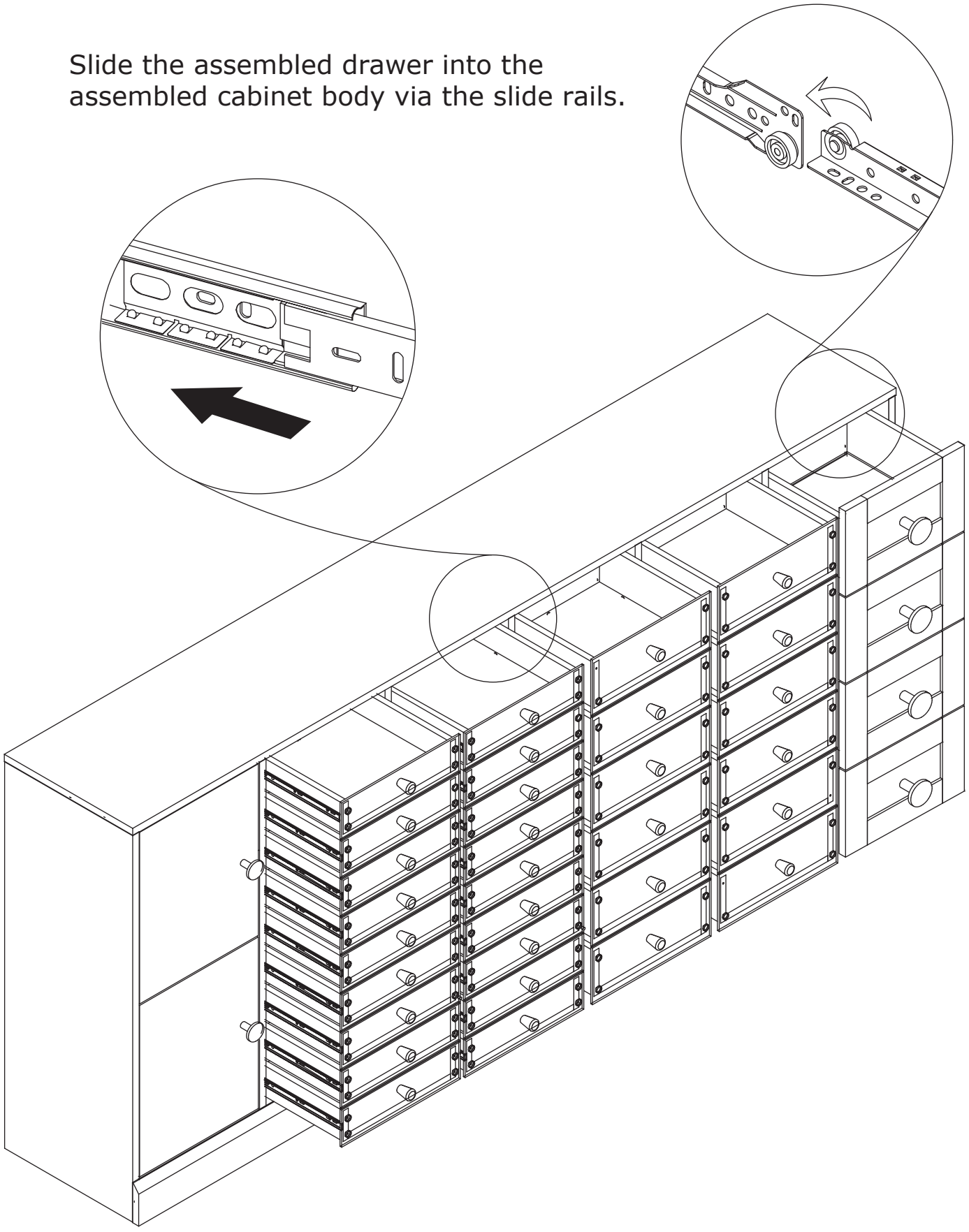

39

If doors are still not aligned if the hinges
are properly correctly, please watch the video.

https://youtu.be/n0Lb36SoODM

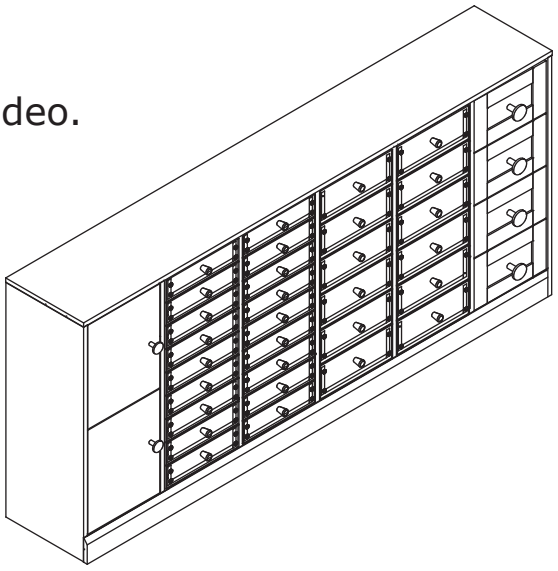

If there is misalignment after you install,
adjust the screw to the best condition

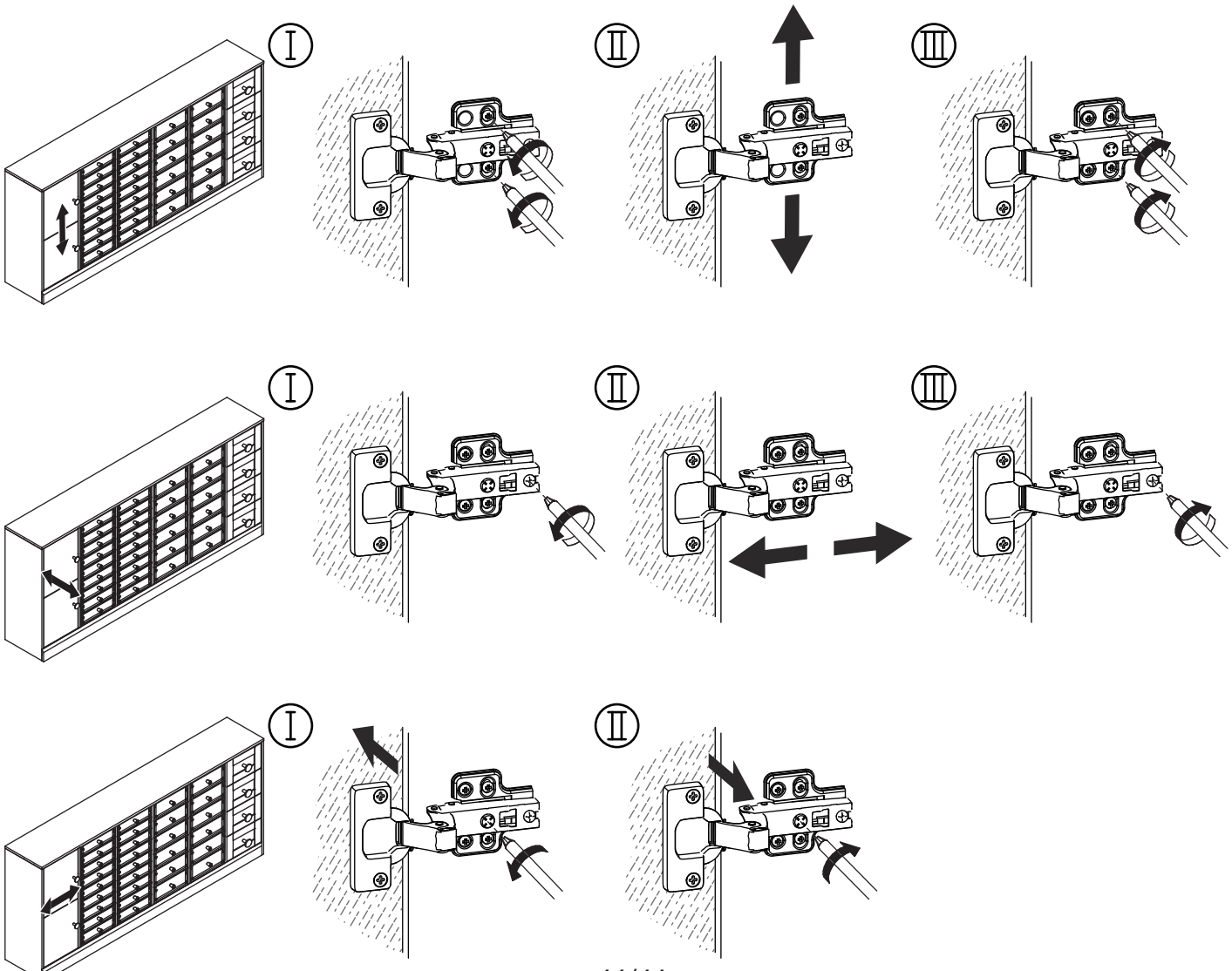

WARRANTY

WARRANTY CLAIMS

- There is a 30-day warranty for broken furniture or any other problems that do not work properly. The warranty will start from the date of purchase which must be verified by proof of purchase.

- Before making a claim, we may be able to answer your query, simply call us. Please leave your purchase order number, along with some details of the problem, if you want a replacement part. We will arrange within 48 hours. If there is out of stock, we will reply with a shipping date.

- The product must be used in accordance with the instructions provided. For health reasons.

- For other reasons, if the furniture needs to be returned, it must be cleaned and dried and operated within 30 days of receipt.

Type of Warranty Claim

- Failure to follow the furniture instructions will invalidate the warranty. Attention please.

- Does not include damage during installation, but includes damage during transportation.

Scope of responsibility

- Shall not bear any responsibility for misuse or user damage and / or loss of parts during the installation of furniture.

- After using, the damage and scratches of the furniture are not covered by the warranty.

The Warranty Relates to All Bought in The Us and Covers The Following Areas

- Sheet parts: 1 month from the date of purchase.

- Electrical parts: 1 month from the date of purchase.

RETURNS

CHANGED YOUR MIND AND NEED TO RETURN YOU ITEM?

PLEASE FOLLOW THE BELOW INSTRUCTIONS:

- If you have purchased and have simply changed your mind, follow the retailer's instructions for returns.

DEFECTIVE ITEMS

- If your item is defective in any way, i.e. it doesn't work but you can't identify why, in the first instance, please call us.

DAMAGED ITEMS

- If you receive an order with obvious shipping damage from the retailer, then we suggest the delivery is refused. If the delivery has been accepted and then shipping damage is found, please follow the specific instructions advised by the retailer.
  In all circumstances please save all packaging material and paperwork for the order. Please be aware that if you dispose of packaging material or attempt to return the merchandise without contacting the fulfiller, you jeopardise your chances of making a claim, and you may not receive a credit for the return.

AFTER-SALES CONTACT


adelahu@fufugaga.com


208-820-0068