KS1169AL
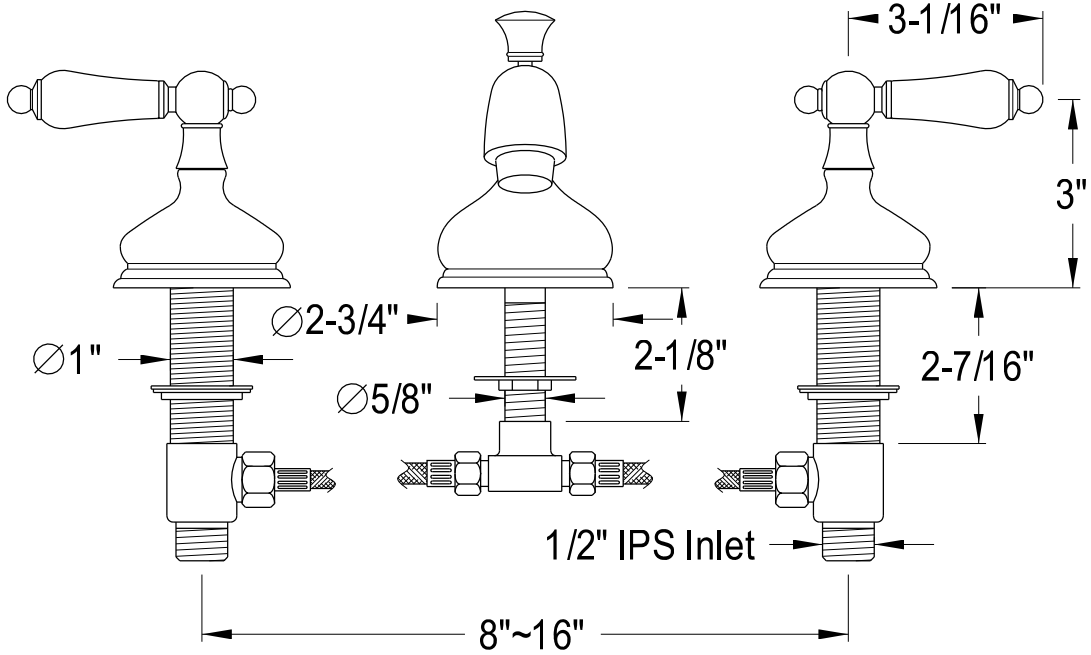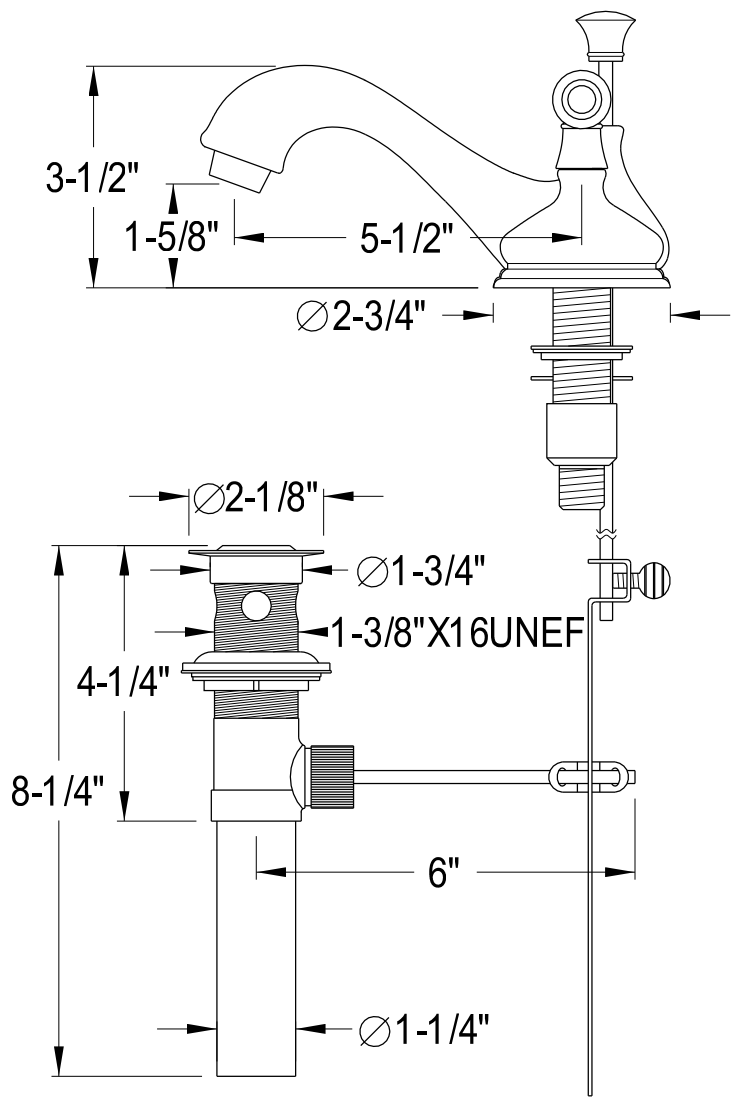
Widespread Lavatory Faucet With Brass Pop-Up