SKU:SF001069

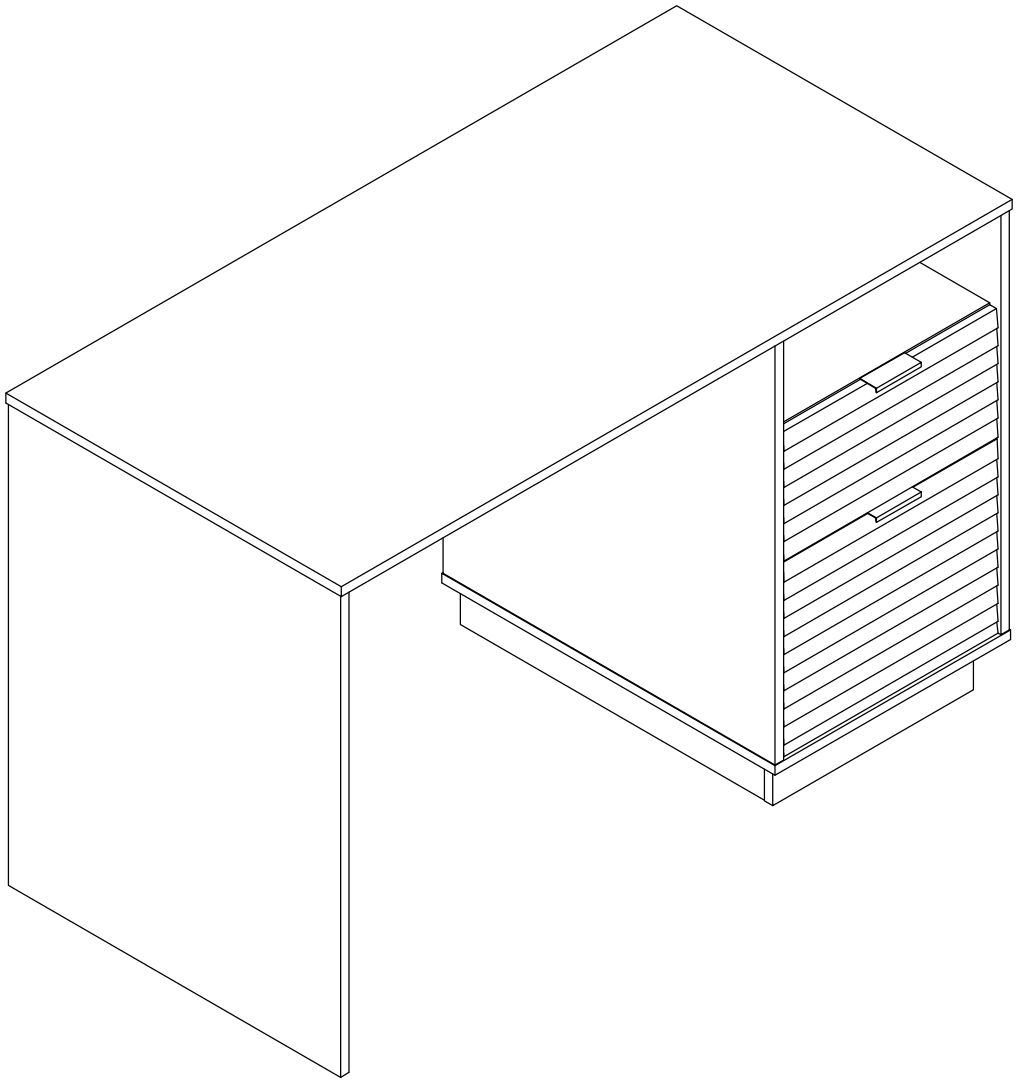

BOARD IDENTIFICATION

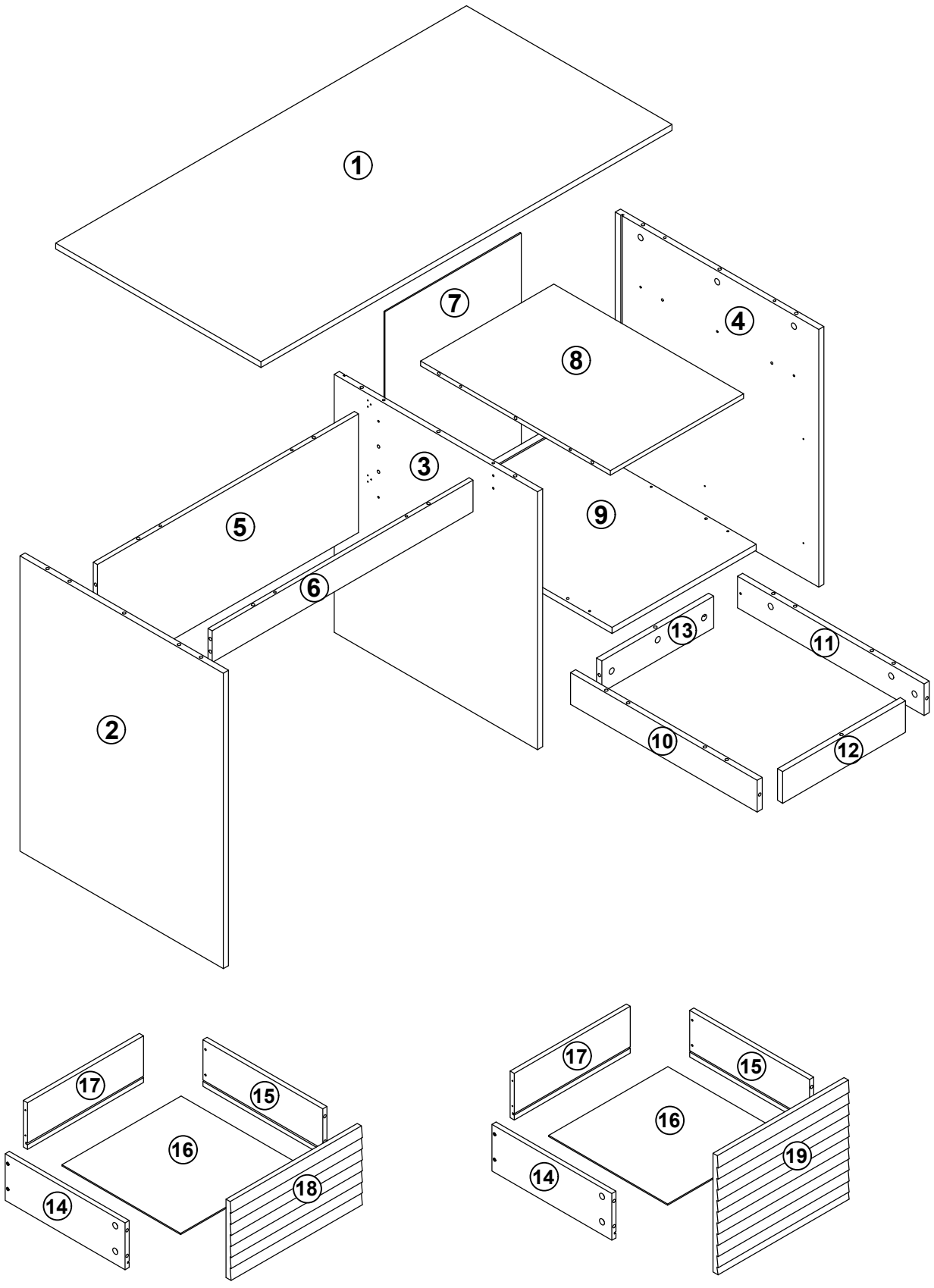

Trouble Shooting

Missing/Damaged pieces/
Wrong size and installation issues

↓

Contact us with your problem,pic, number and qty to the "Contact seller" button in the detail page of your order

↓

Respond with 24 hours to solve issue

Before You Start

1.Read through each step carefully and follow the proper order

2.Separate and count all your parts and hardware

3.Give yourself enough room for the assembly process

4.Caution: If using a power drill or power screwdriver for screwing, please be aware to slow down and stop when screw is tight. Failure to do so may result in stripping the screw

Cam Lock Fastening System

This Cam Lock Fastening System willl be used throughout theassembly process

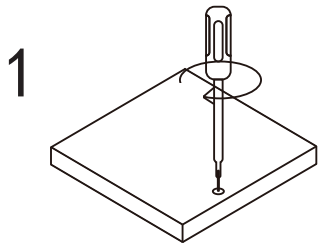

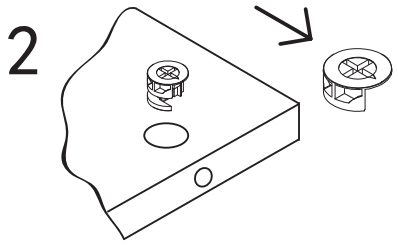

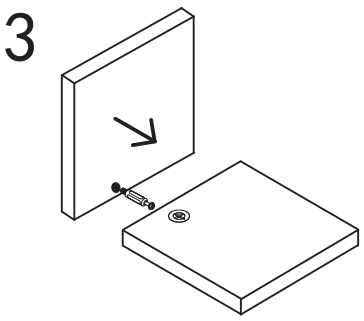

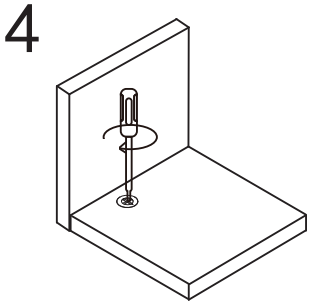

Parts List

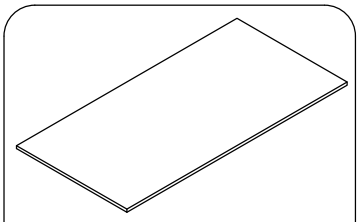

1	1PC

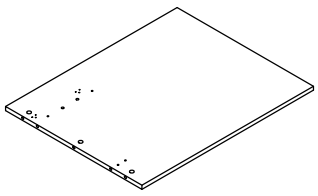

2	1PC

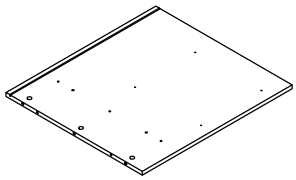

3	1PC

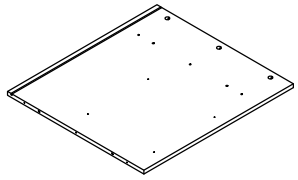

4	1PC

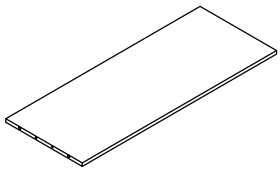

5	1PC

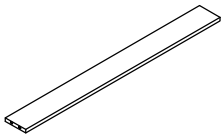

6	1PC

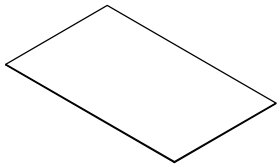

7	1PC

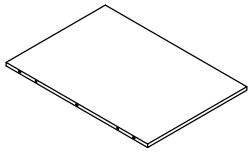

8	1PC

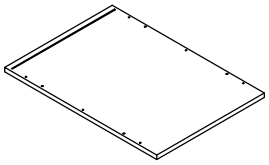

9	1PC

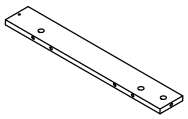

10	1PC

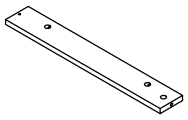

11	1PC

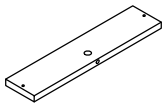

12	1PC

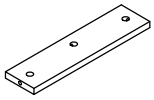

13	1PC

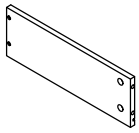

14	2PCS

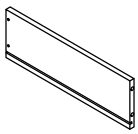

15	2PCS

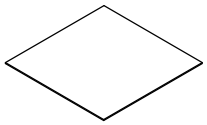

16	2PCS

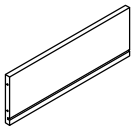

17	2PCS

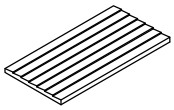

18	1PC

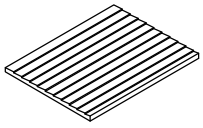

19	1PC

Hardware List

	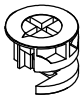 Ø15
A	45PCS
B	19PCS

 M6*30mm	 Ø4*40mm
C	26PCS
D	14PCS

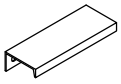	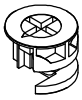 Ø12
E	2PCS
F	26PCS

	 M3*12mm
G	4PCS
H	44PCS

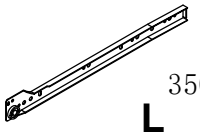 350mm L	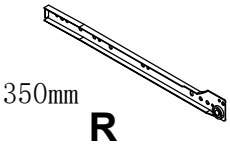 350mm R
I	2PCS
J	2PCS

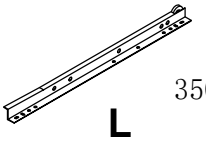 350mm L	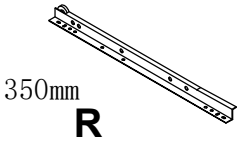 350mm R
K	2PCS
L	2PCS

 M3*14mm	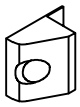
M	4PCS
N	4PCS

STEP 1

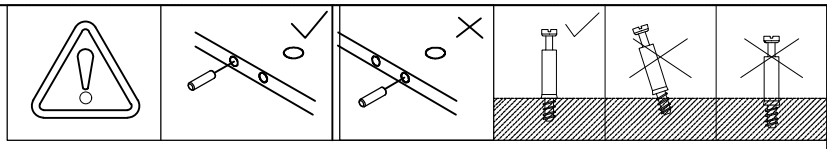

A	x14

I	x2

J	x2

H	x8

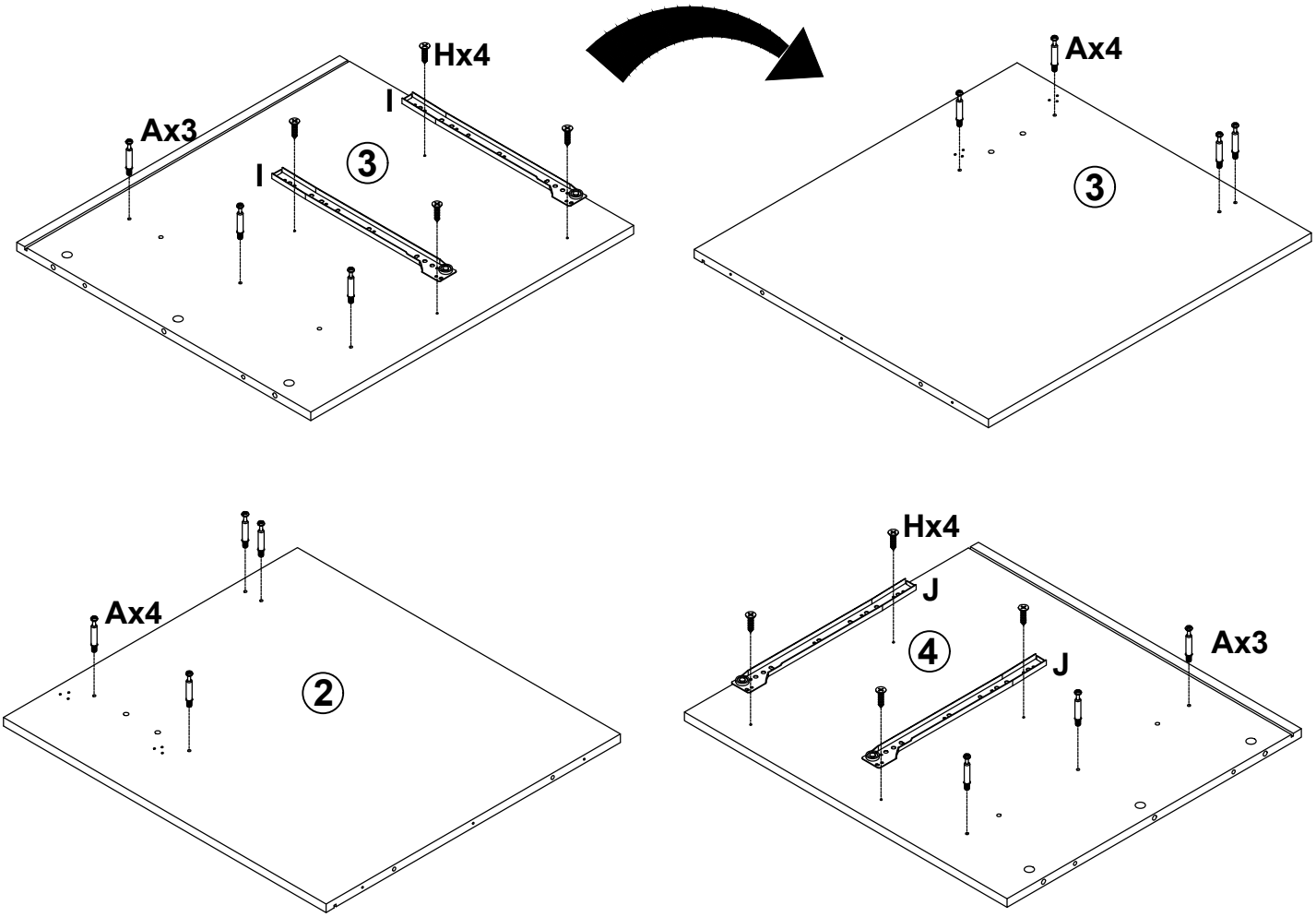

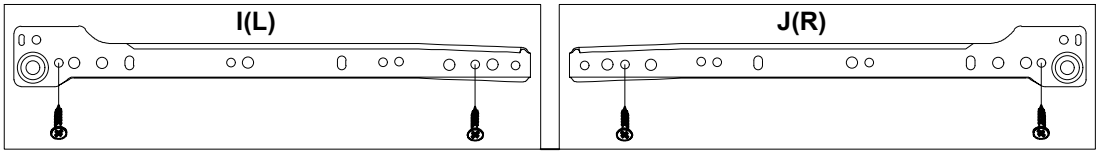

STEP 2

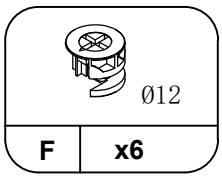

F	x6

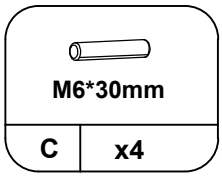

C	x4

STEP 3

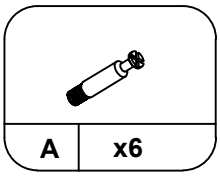

A	x6

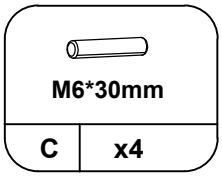

C	x4

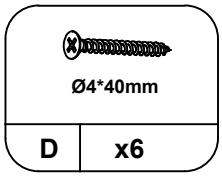

D	x6

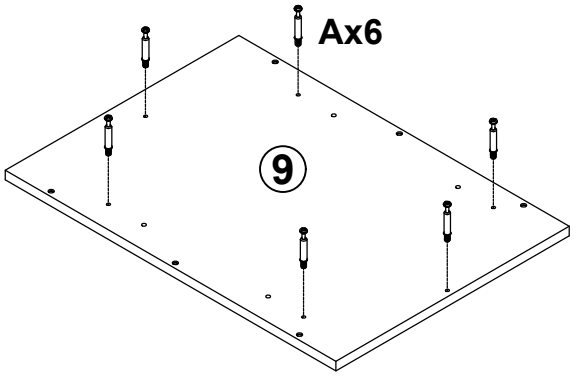

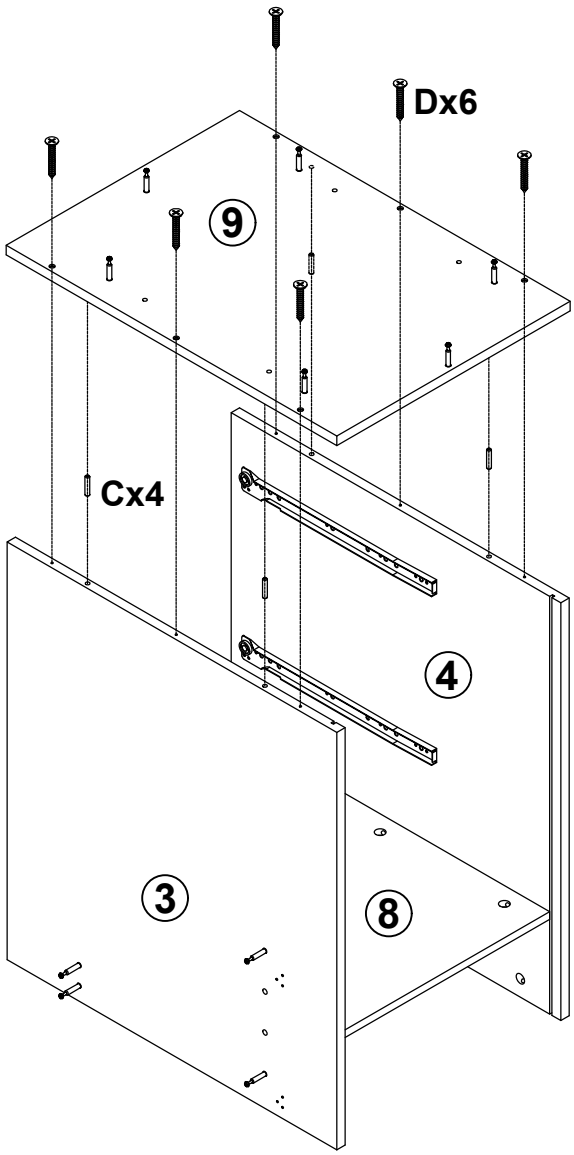

STEP 4

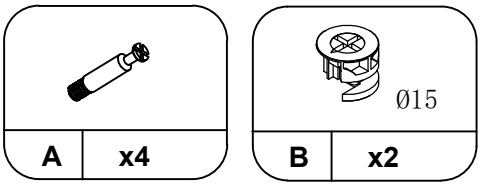

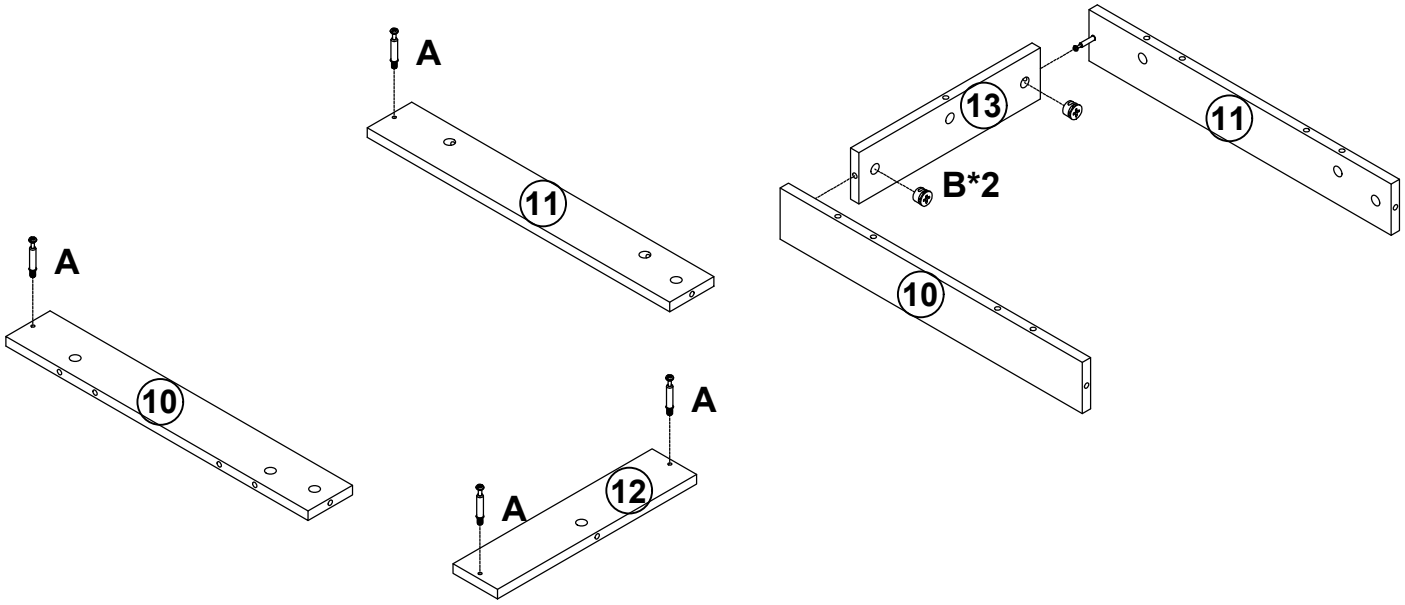

STEP 5

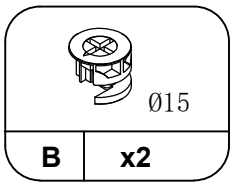

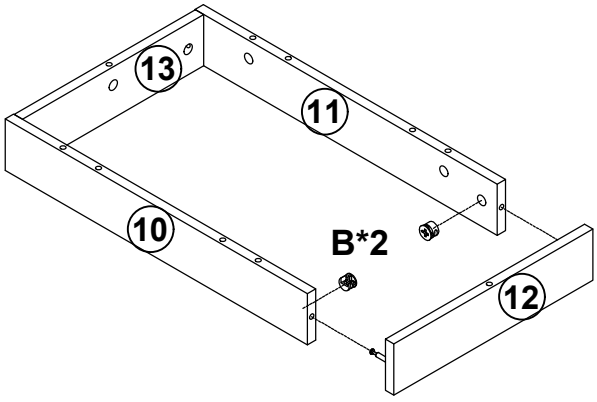

STEP 6

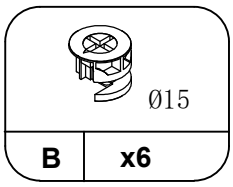
Ø15
B
x6

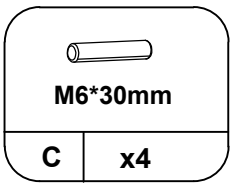
M6*30mm
C
x4

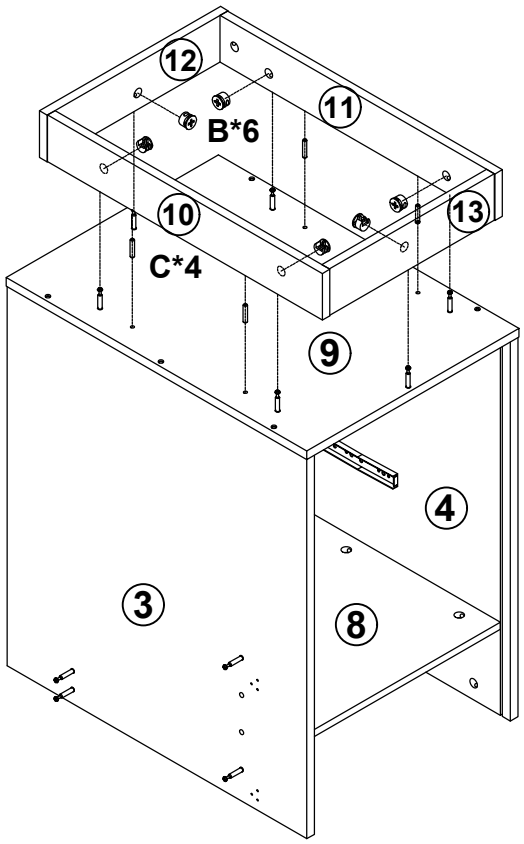
12
11
B*6
10
13
C*4
9
4
3
8

STEP 7

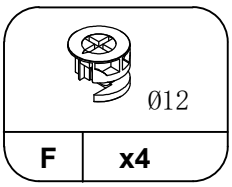
Ø12
F
x4

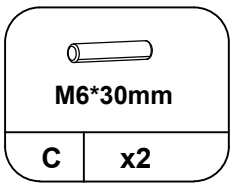
M6*30mm
C
x2

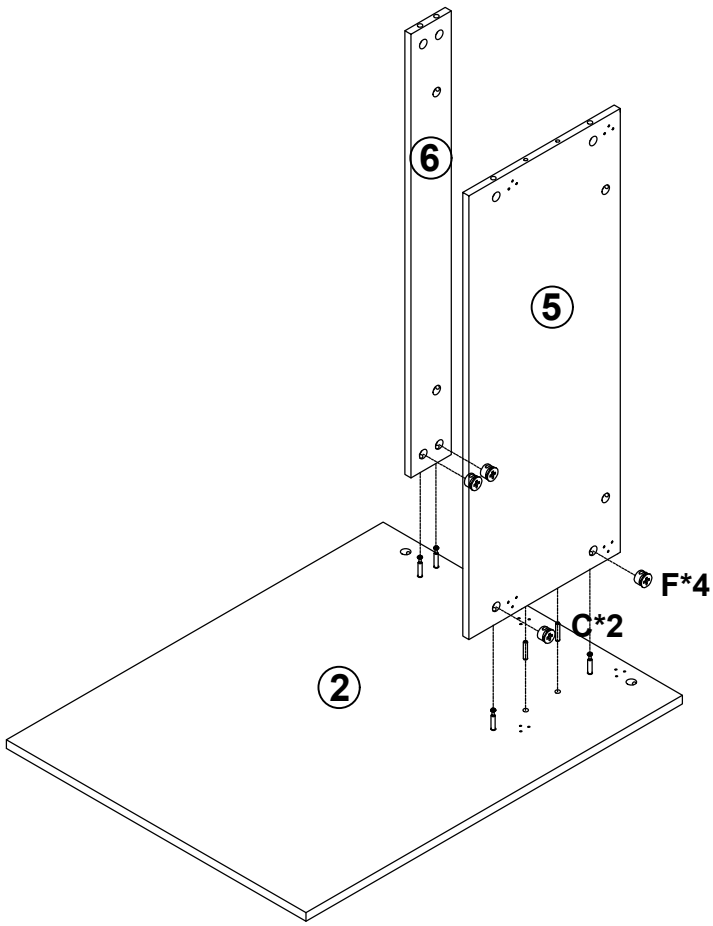
6
5
F*4
C*2
2

STEP 8

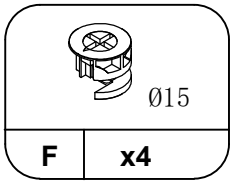

F	x4



M6*30mm	
C	x2



Important
2 people required
2 personnes requises
2 personas requeridas

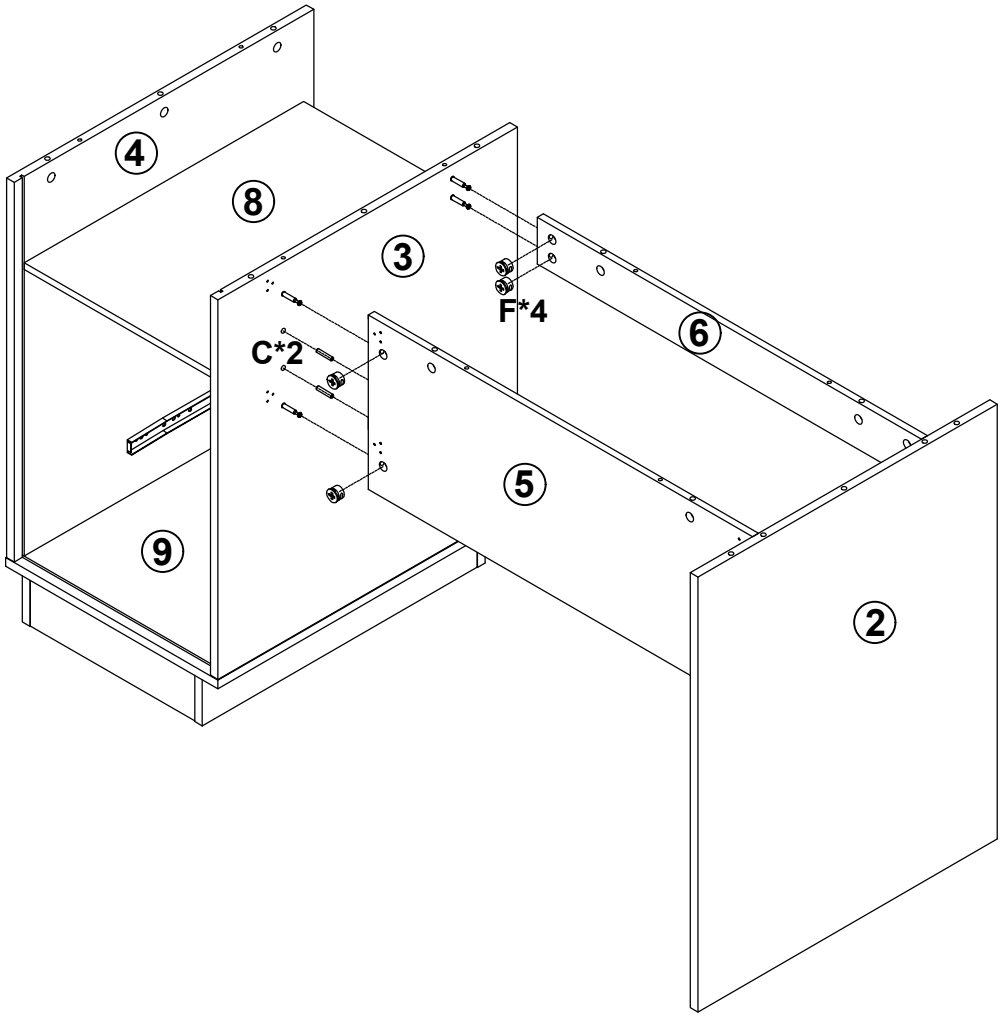

STEP 9

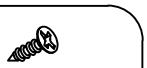

H	x24



G	x4

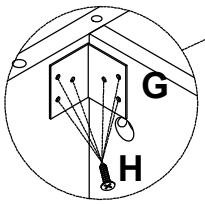

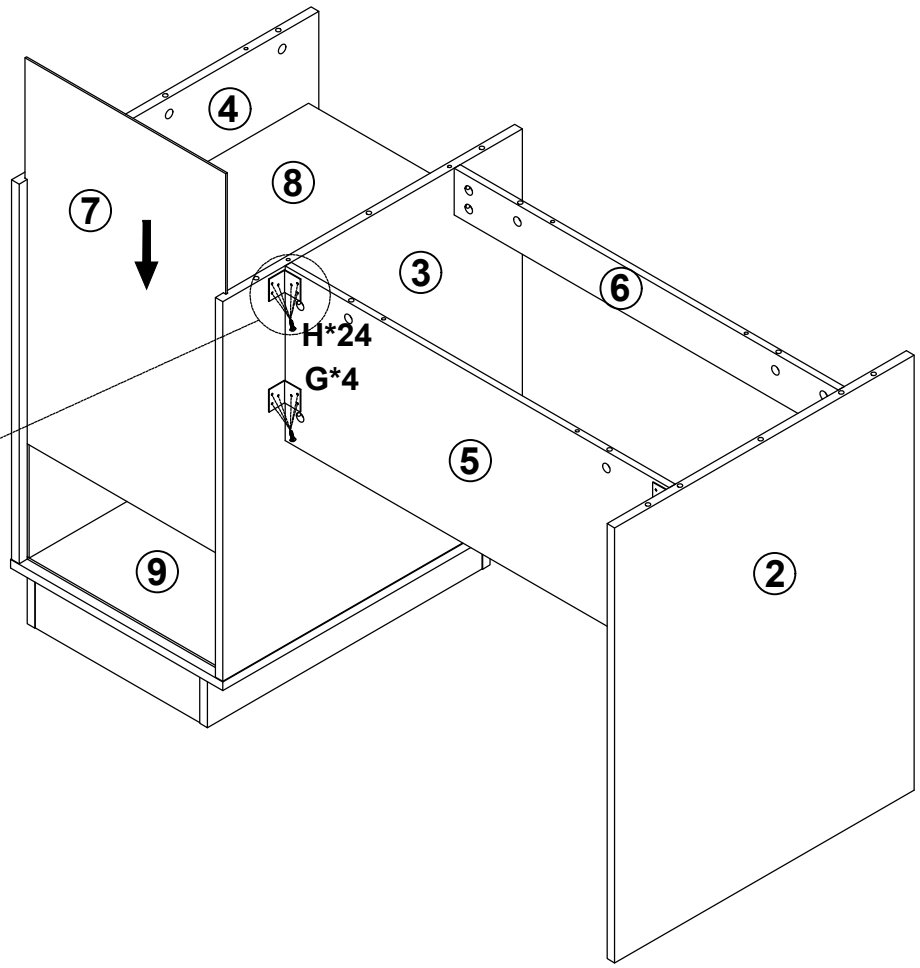

STEP 10



Ø4*40mm

D	x8

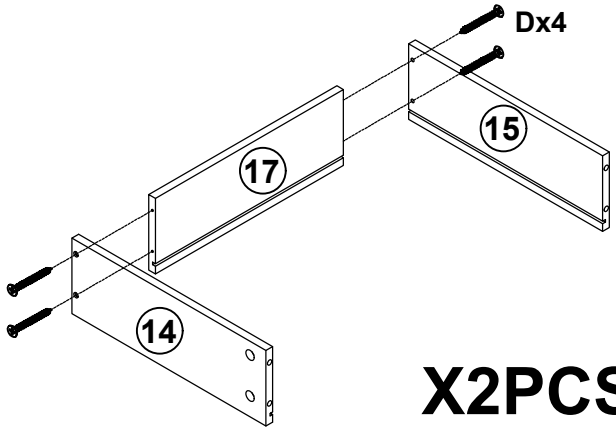

X2PCS

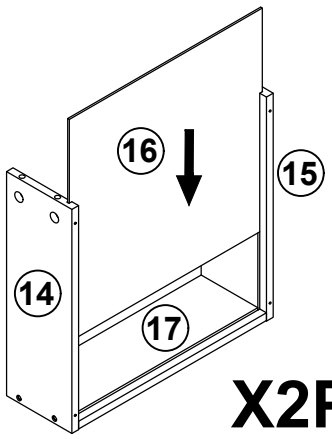

X2PCS

STEP 11



A	x8

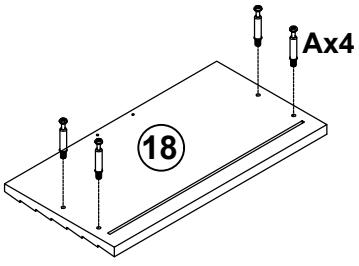

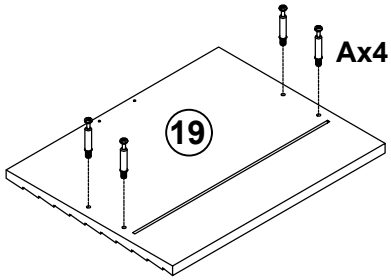

STEP 12

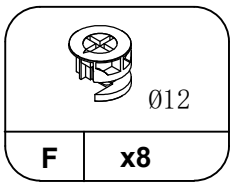

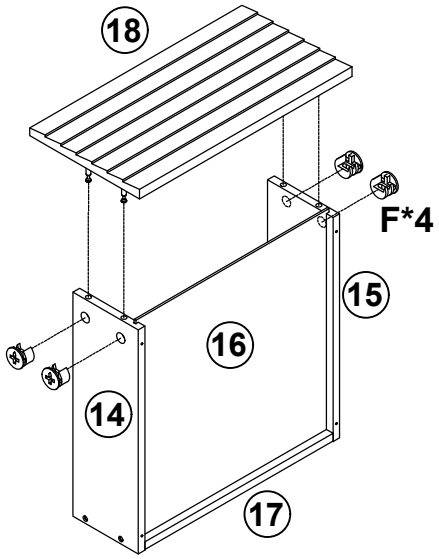

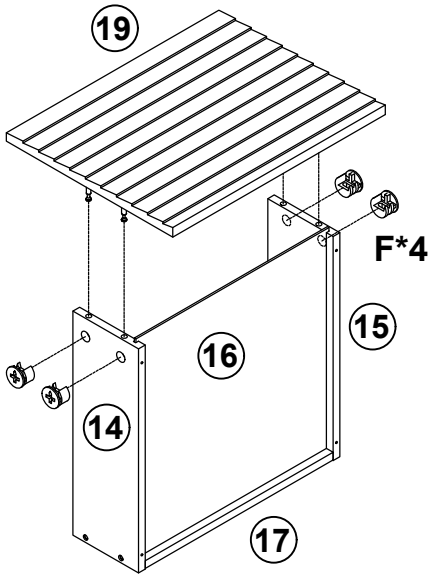

STEP 13

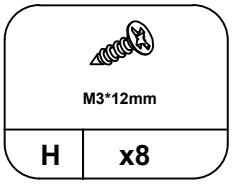

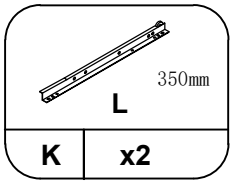

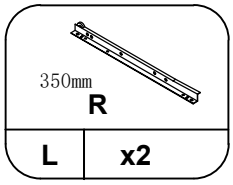

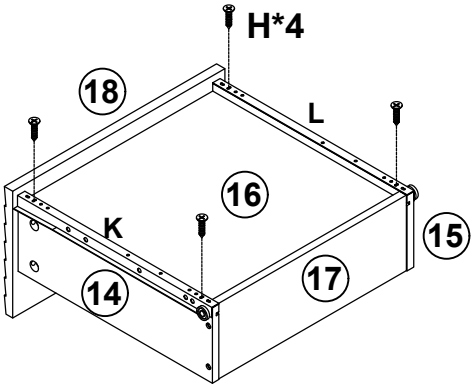

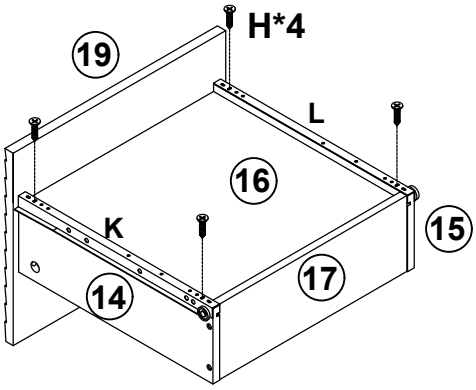

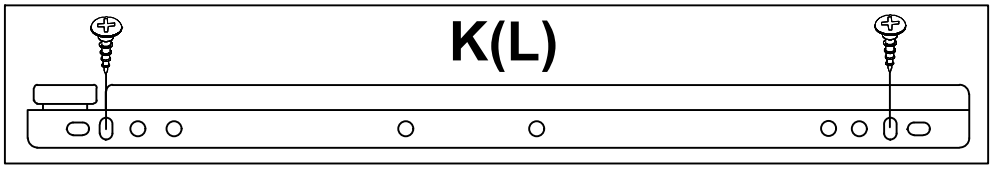

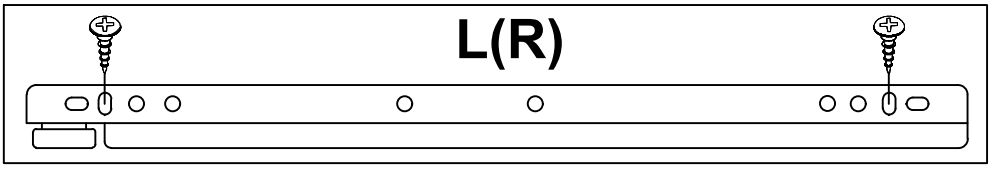

STEP 14

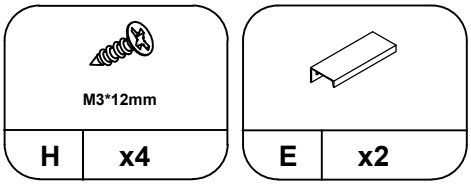

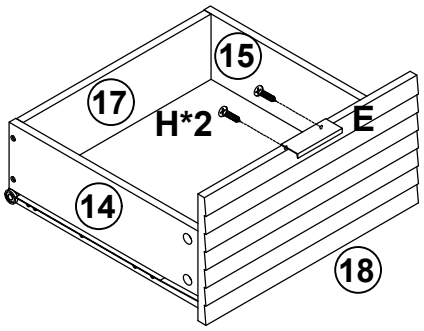

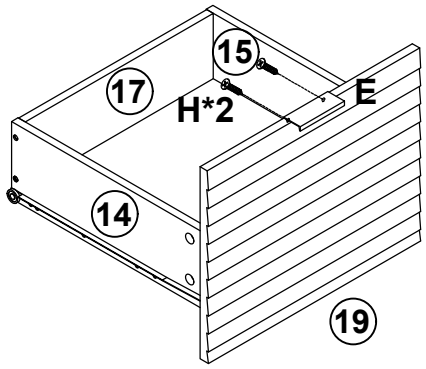

STEP 15

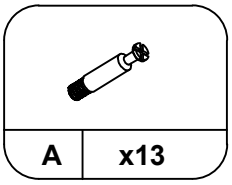

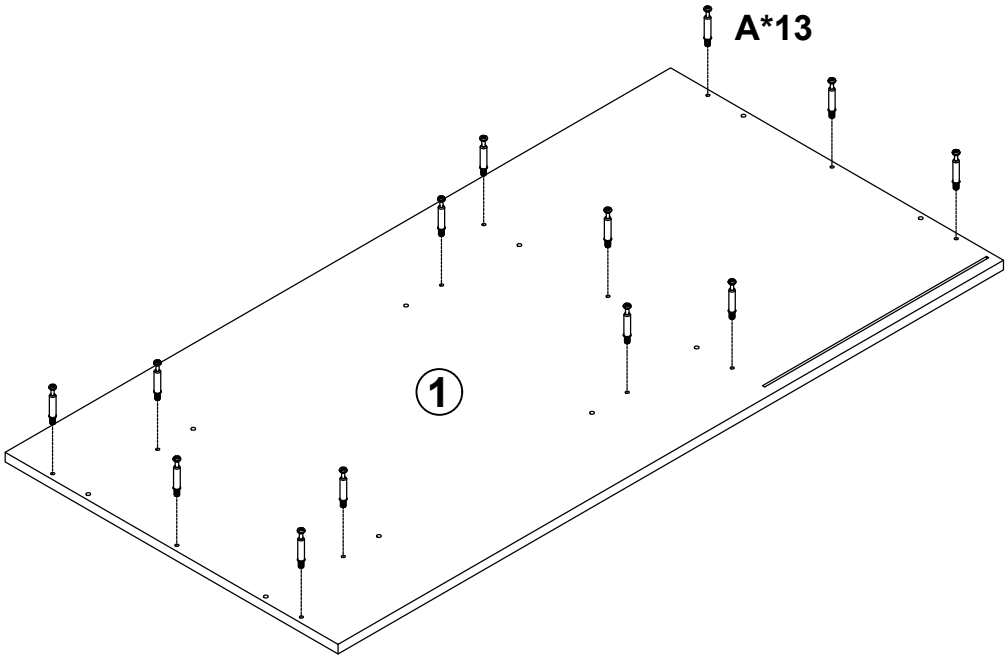

STEP 16

Ø15	M6*30mm	Ø12	M3*14mm	
B x9	C x10	F x4	M x4	N x4

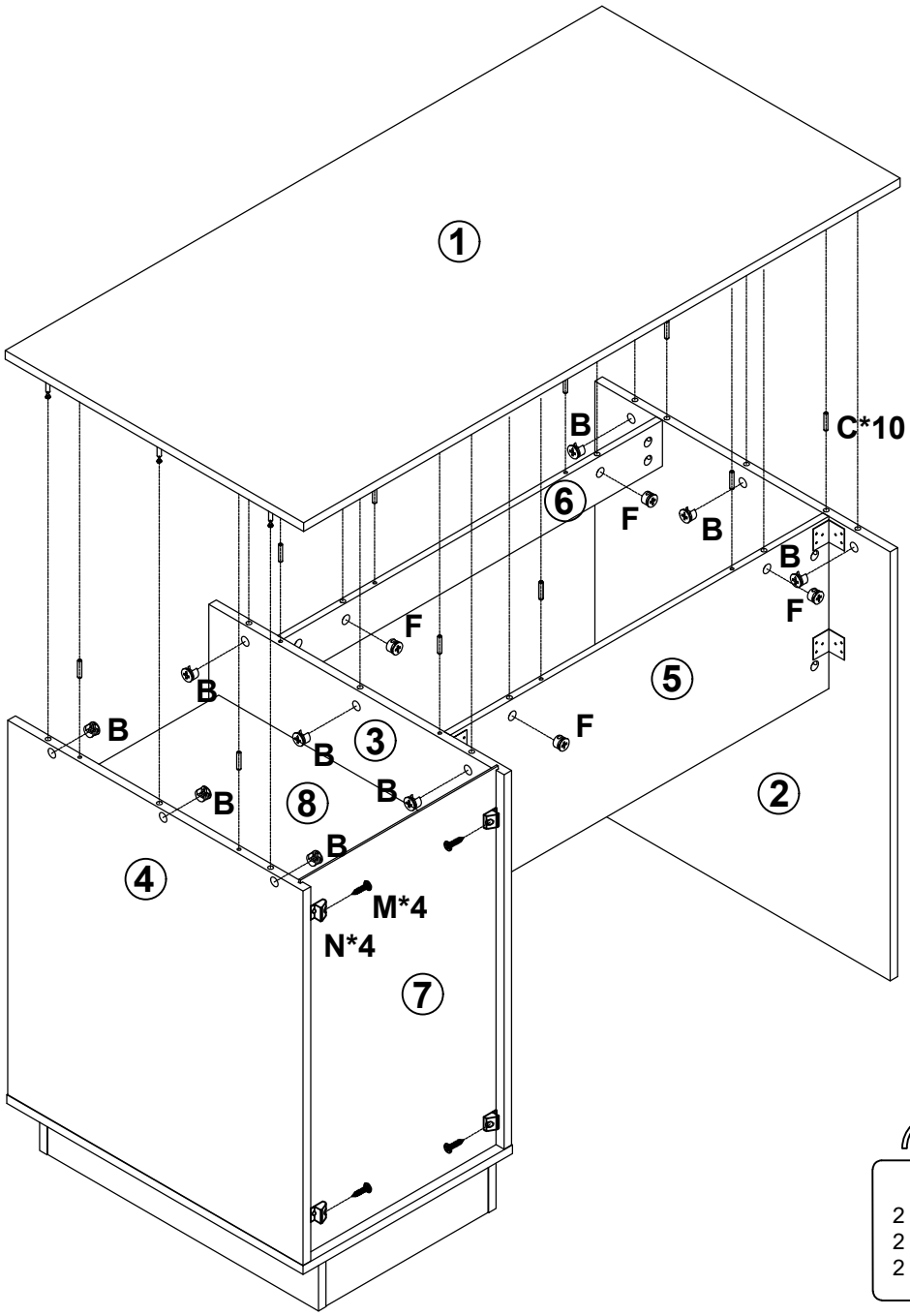

2

Important
2 people required
2 personnes requises
2 personas requeridas

STEP 17

