LIGHTING THE WAY FOR SIXTY YEARS

ASSEMBLY INSTRUCTION

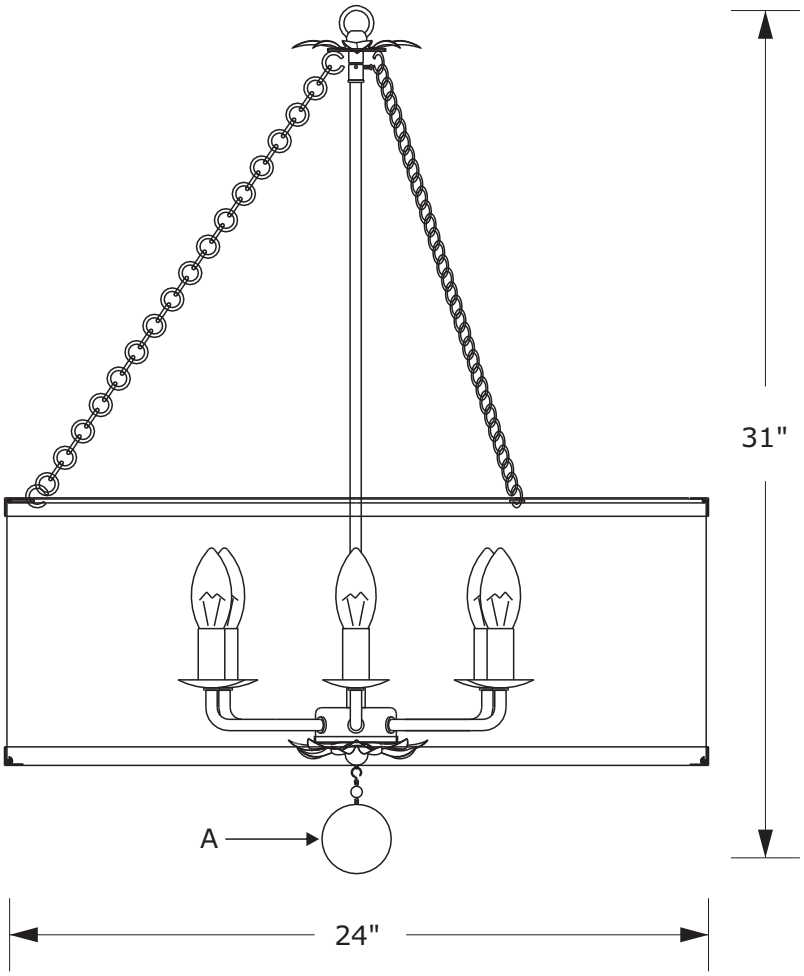

All electrical components must be installed by a licensed electrician in accordance with the National Electric Code and the appropriate local electrical codes.

You will need 6 -Candelabra Base Bulb
40 Watts Recommended 60 Watts Max.
USE LED BULBS FOR EXTENDED USE
THIS FIXTURE IS DRY RATED

How to install

1. Feed wires through stem/swivel/ loop.
2. Attach the stem assembly onto the light cluster.
3. Attach the swivel/loop assembly onto the stem.
4. Put the top metal band ring over the top of the white cloth shade.
5. Take one end of the decorative chain and hang it onto the hook on the loop assembly. Hang the other end to the hook inside the shade. Repeat for the other two decorative chains.
6. Place the candle sleeve onto the socket, and insert recommended bulb (not included).
7. Hang the metal ball "A" onto the bottom of the fixture.

Hangings

A.1 Set.
(1)10mm + (1)60mm

⚠ **WARNING:** This product can expose you to Lead, which is known to the State of California to cause cancer and/or birth defects or reproductive harm.

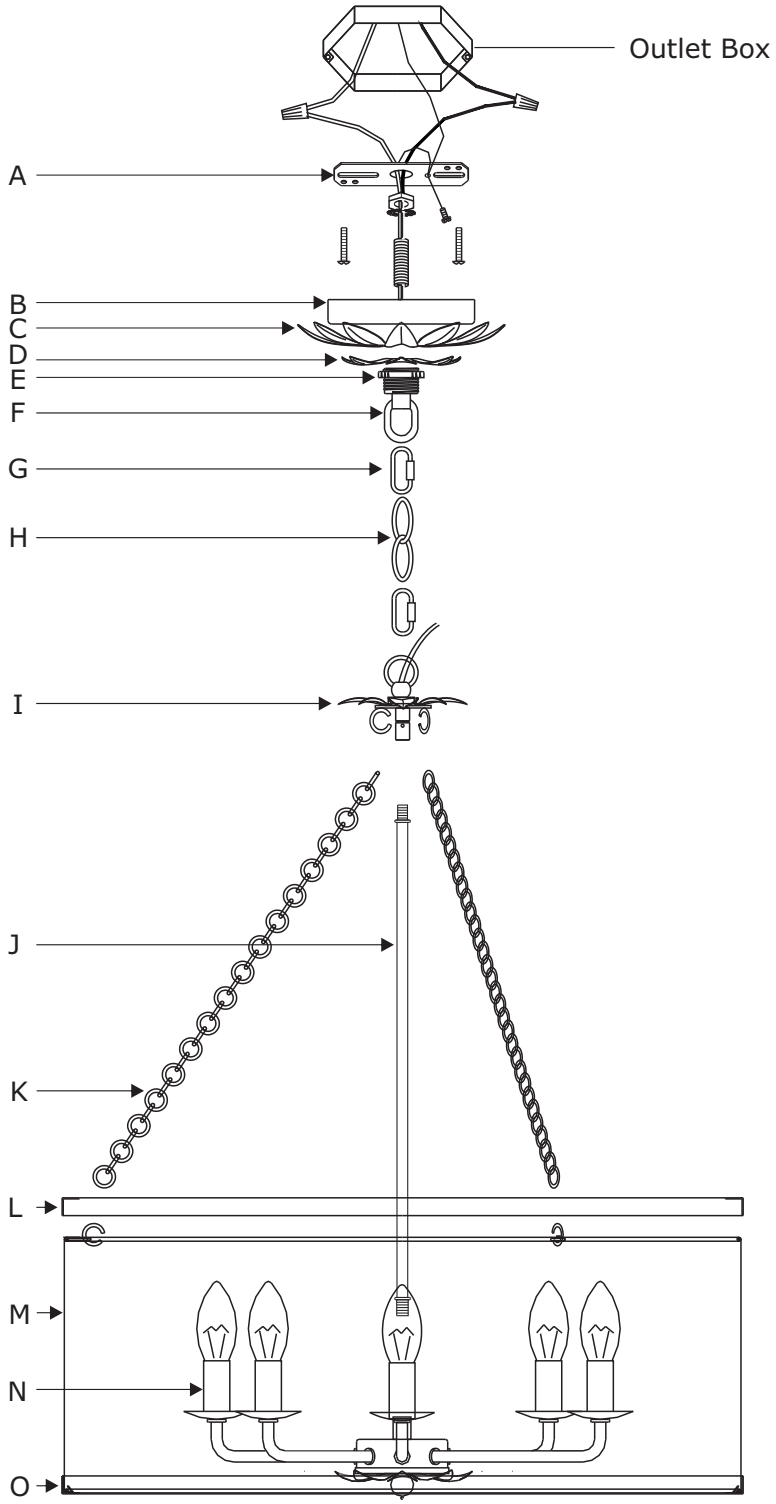

Part Number

A. (1) - Mounting Hardware
B. (1) - Canopy(W5",H0.75") #XRE513GACAN5IN
C. (1) - Decorative Metal Leaves1
D. (1) - Decorative Metal Leaves2
E. (1) - Collar Ring
F. (1) - Collar Loop #XRE513GALOOP
G. (2) - Quick Link
H. (1) - Hanging Chain(72",4mm) #XRE515GACHA4MM
I. (1) - Loop Assembly
J. (1) - Center Stem(20.71",9.7mm) #XRE518GASTEM
K. (3) - Decorative Chains(each18",3mm) #XRE518GADECHA3MM
L. (1) - Top Metal Band Ring
M. (1) - White Cloth Shade(W23.8",H9.25") #XRE518GASHA24IN
N. (6) - Candle Sleeve(W0.87",H1.97") #XRE511GACDL2IN
O. (1) - Bottom Metal Band Ring