TWIN XL LOFT BED
ASSEMBLYINSTRUCTIONS

SAFETY WARNINGS AND GENERAL NOTES:

1. Follow the information on the warnings on the bunk bed end structure and on the carton. Do not remove the warning label from the bed.
2. Always use the recommended size mattress on mattress support, or both, to help prevent the likelihood of entrapment or falls.
3. Do not allow children under 6 years of age to use the upper bunk.
4. Periodically check and ensure the guardrail, ladder and other components are in their proper position, free from damage, and all connectors are tight.
5. Do not allow horseplay on or under beds.
6. Always prohibit jumping on the bed.
7. Prohibit more than one person on upper bunk.
8. Always use the ladder for entering and leaving the upper bunk.
9. Do not use substitute parts. Contact the manufacturer or dealer for replacement parts.
10. Use of a night-tight may provide added safety precaution for a child using the upper bunk.
11. Always use guardrails on both long sides of the upper bunk.
12. If the bunk bed will be placed next to a wall, the guardrail that runs the full length of the bed should be placed against the wall to prevent entrapment between the bed and the wall.
The use of water or sleep flotation mattresses is prohibited.
13. STRANGULATION HAZARD-Never attach or hang items to any part of the bunk bed that is not designed for use with the bed.
14. Keep these instructions for future reference.
15. We recommend assembling your bunk bed on the shipping carton to protect your floor or carpet.
16. Be certain all staples are out of the box before beginning assembly on the shipping carton.
17. USE ONLY MATTRESSES WHICH ARE AS THE TABLE BELOW ON UPPER AND ON LOWER BUNKS.
Up bed (bunk bed and tribed included)

Bed type	Length	Width	Thickness
Full Standard	80"	39″	6" max

18. SURFACE OF MATTRESS MUST BE AT LEAST 5"(127MM) BELOW THE UPPER EDGE OF GUARDRAILS.
19. Replacement Parts:
Replacement Parts, including additional guardrails, may be obtained from any of our dealers.

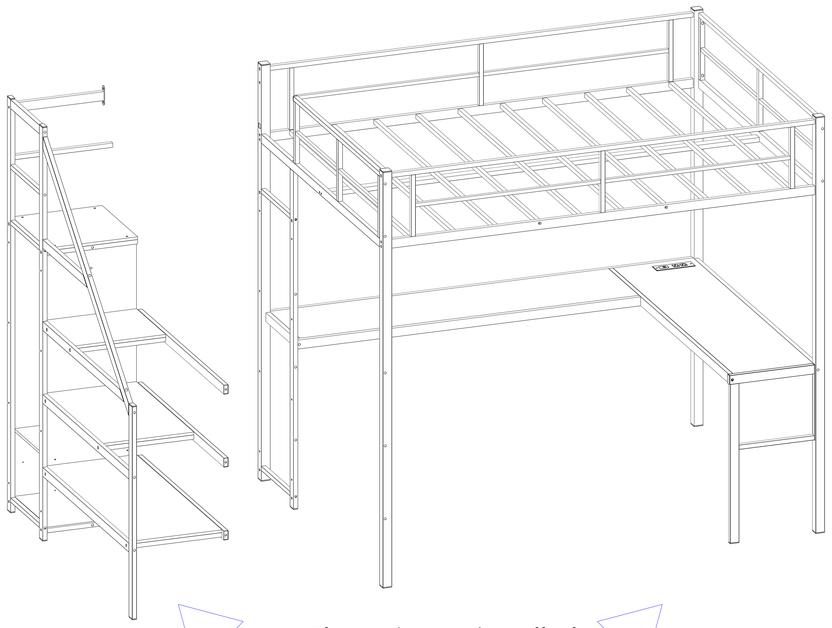

Stairs on the left

The stairs are installed in the left direction.

The right side of the bed

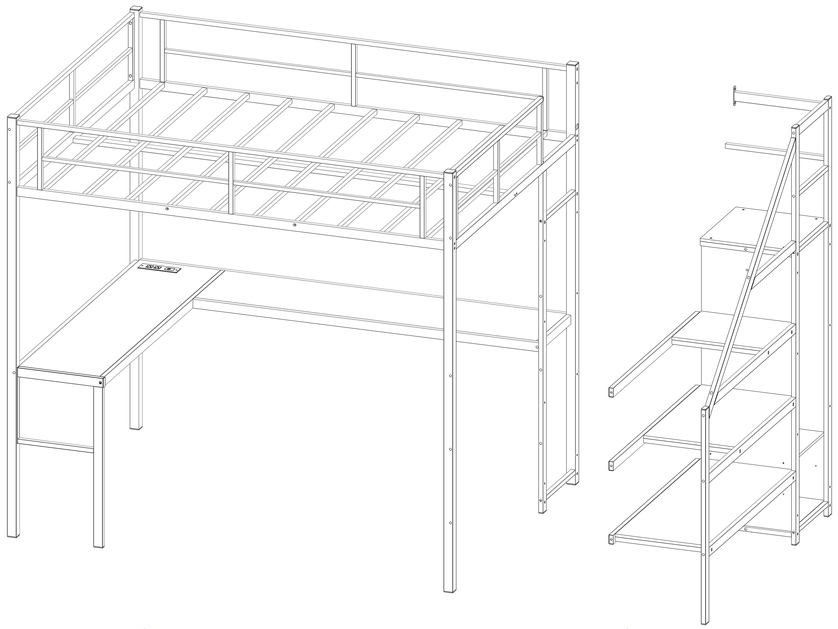

The left side of the bed

The stairs are installed in the right direction.

Right side of the stairs

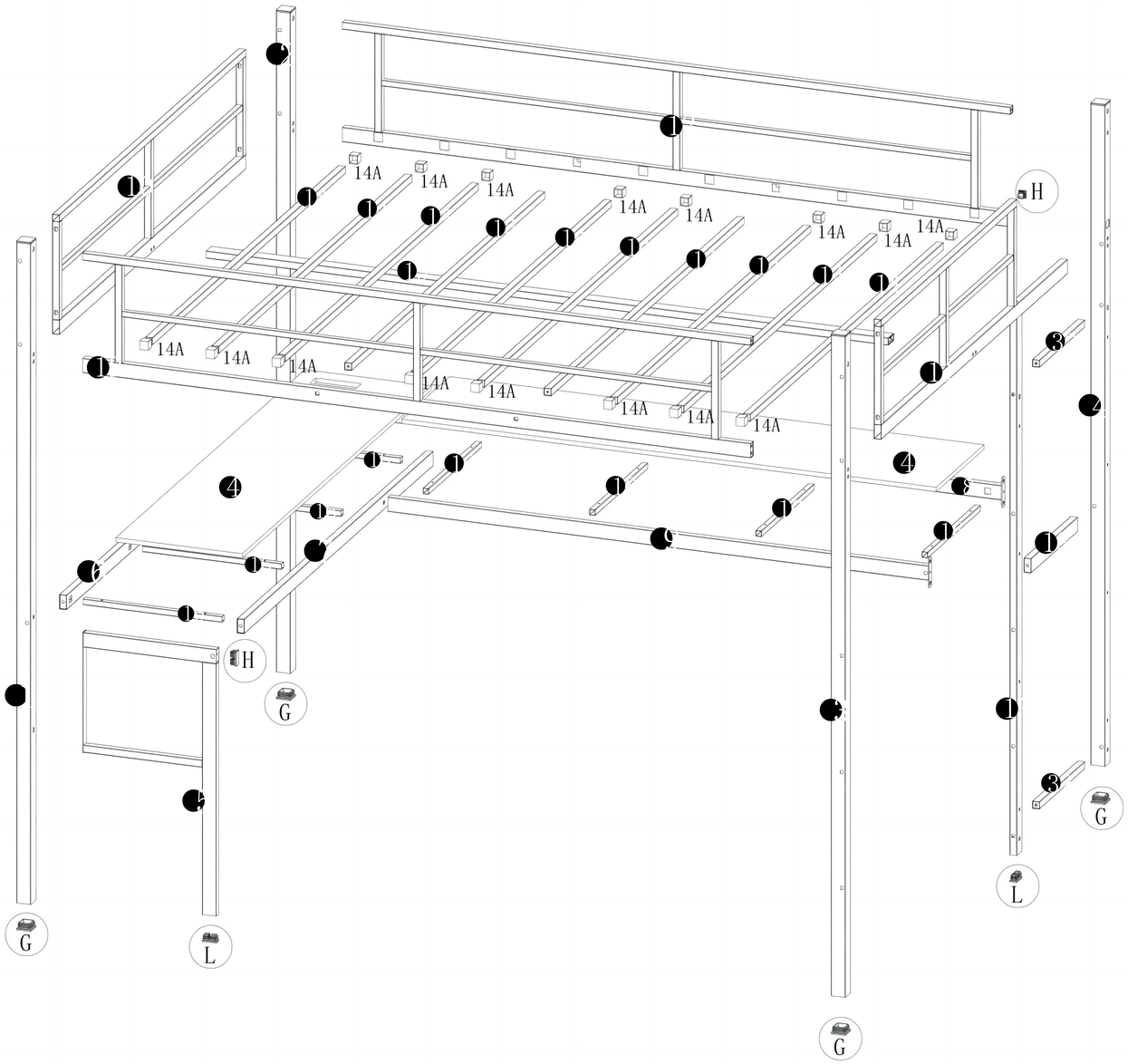

Bed parts view

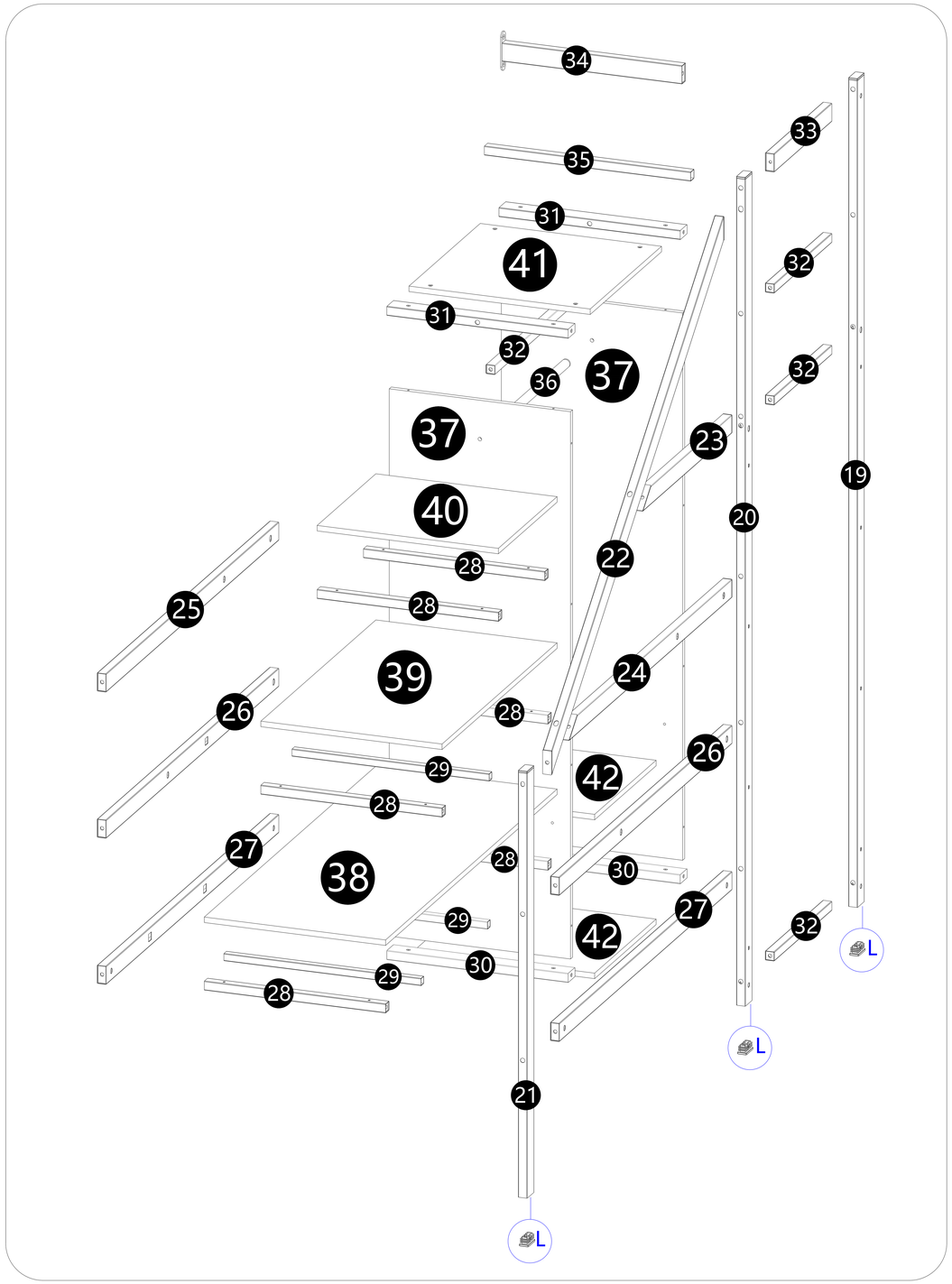

Stairs part view

PART LIST

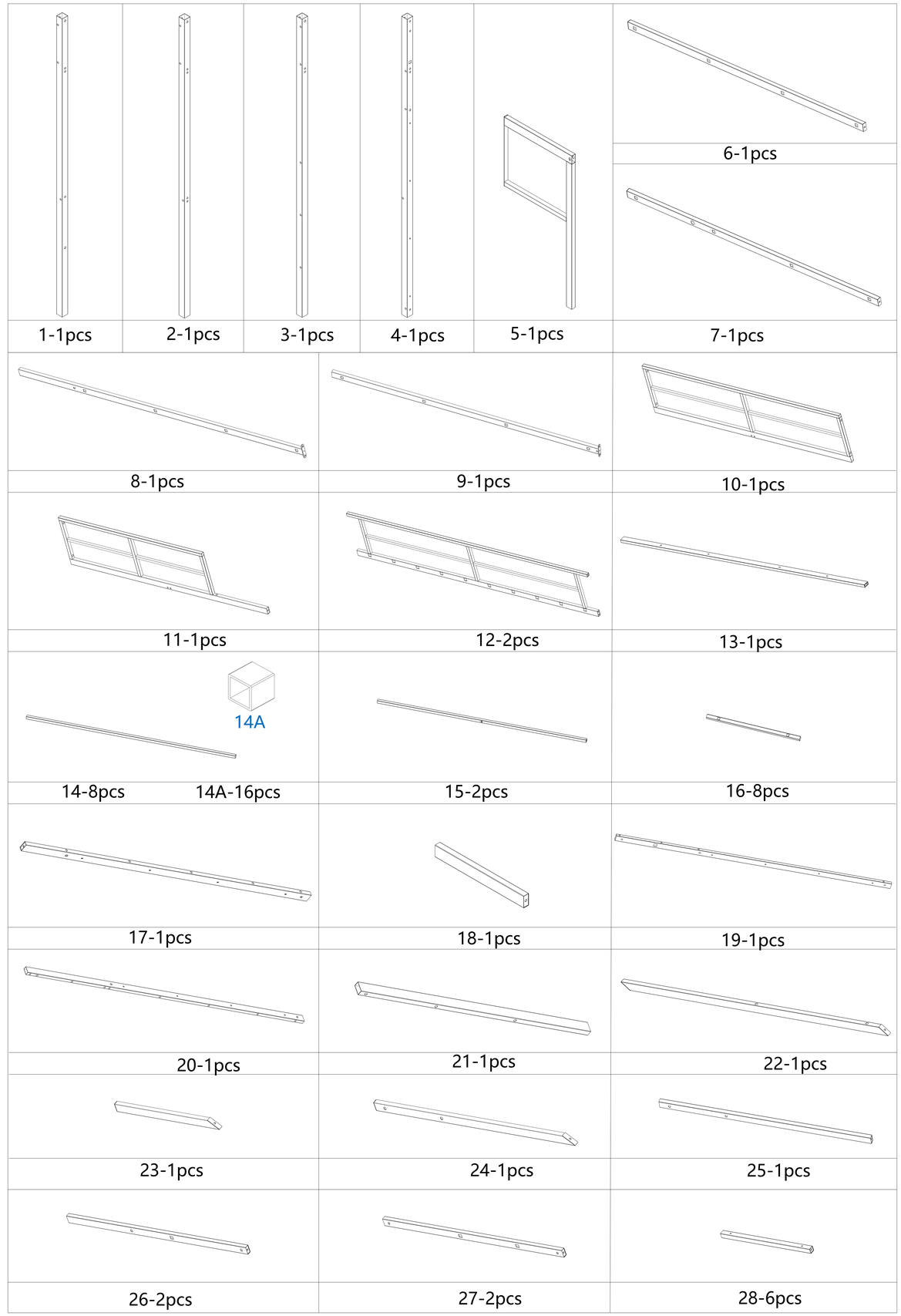

29-3pcs

30-2pcs

31-2pcs

32-6pcs

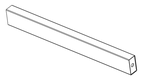
33-1pcs

34-1pcs

35-1pcs

36-1pcs

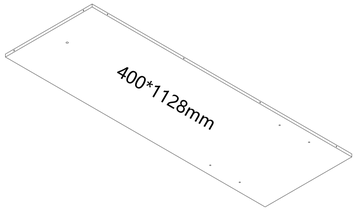

37-2pcs

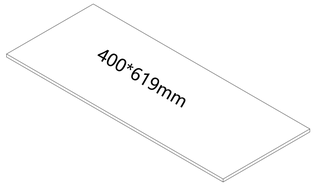

38-1pcs

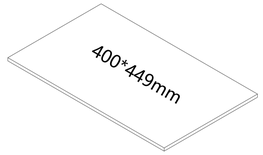

39-1pcs

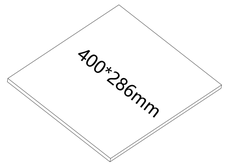

40-1pcs

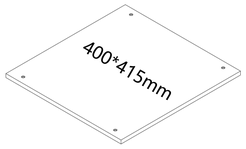

41-1pcs

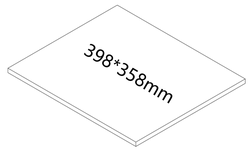

42-2pcs

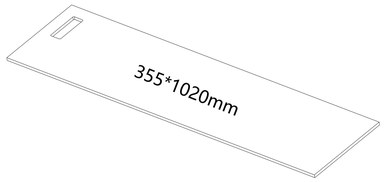

43-1pcs

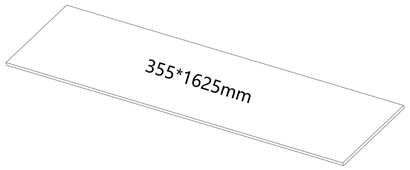

44-1pcs

HARDWARE LIST

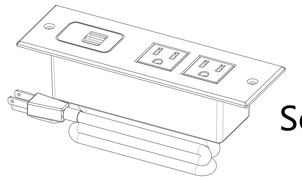
P
Socket
1pcs

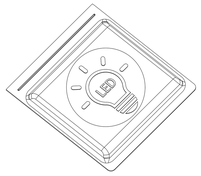
Q
Light strips
1pcs

A
4*10-32pcs

B
8*15-4pcs

C
8*35-37pcs

D
8*55-60pcs

E
8*15-7pcs

F
5*10-4pcs

G
4*25-16pcs

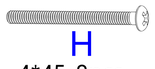
H
4*45-8pcs

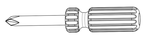
L

J
Installed

K
Installed

M
Installed

N

Step 1: Use hardware N and D to connect #1 and #5 together.

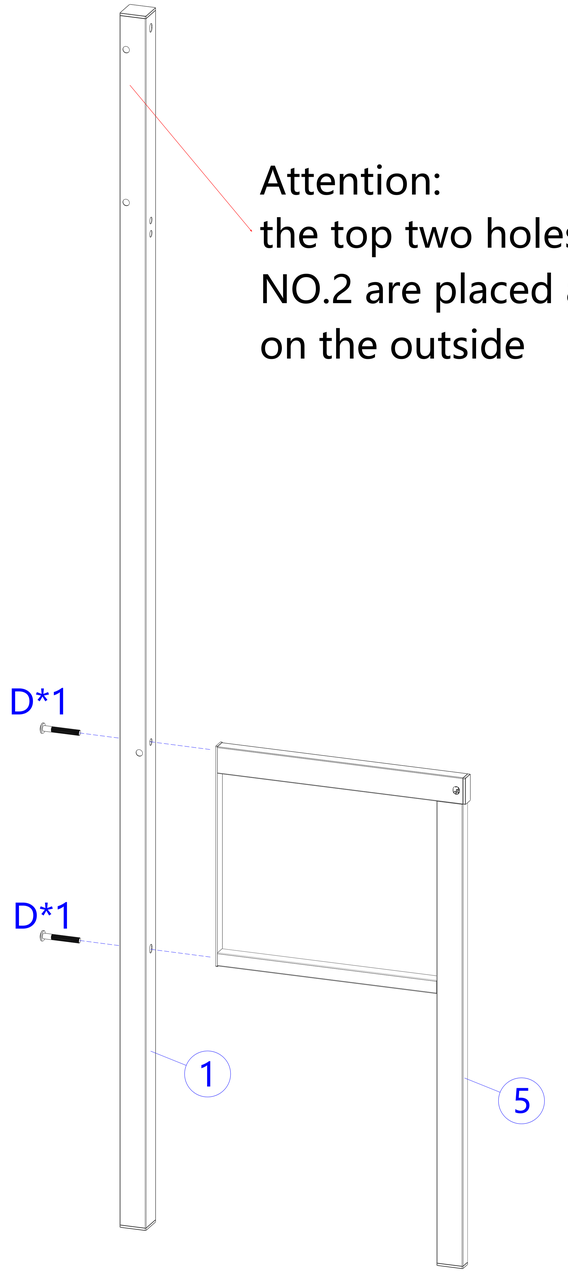

Attention:
the top two holes of NO.1and NO.2 are placed and installed on the outside

1-1pcs

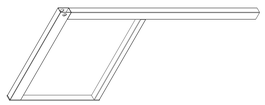
5-1pcs

D 8*55-2pcs

N

Step 2: Use hardware N and D to connect #3 and #12 together.

Attention:
the top two holes of NO.3 is placed and installed on the outside

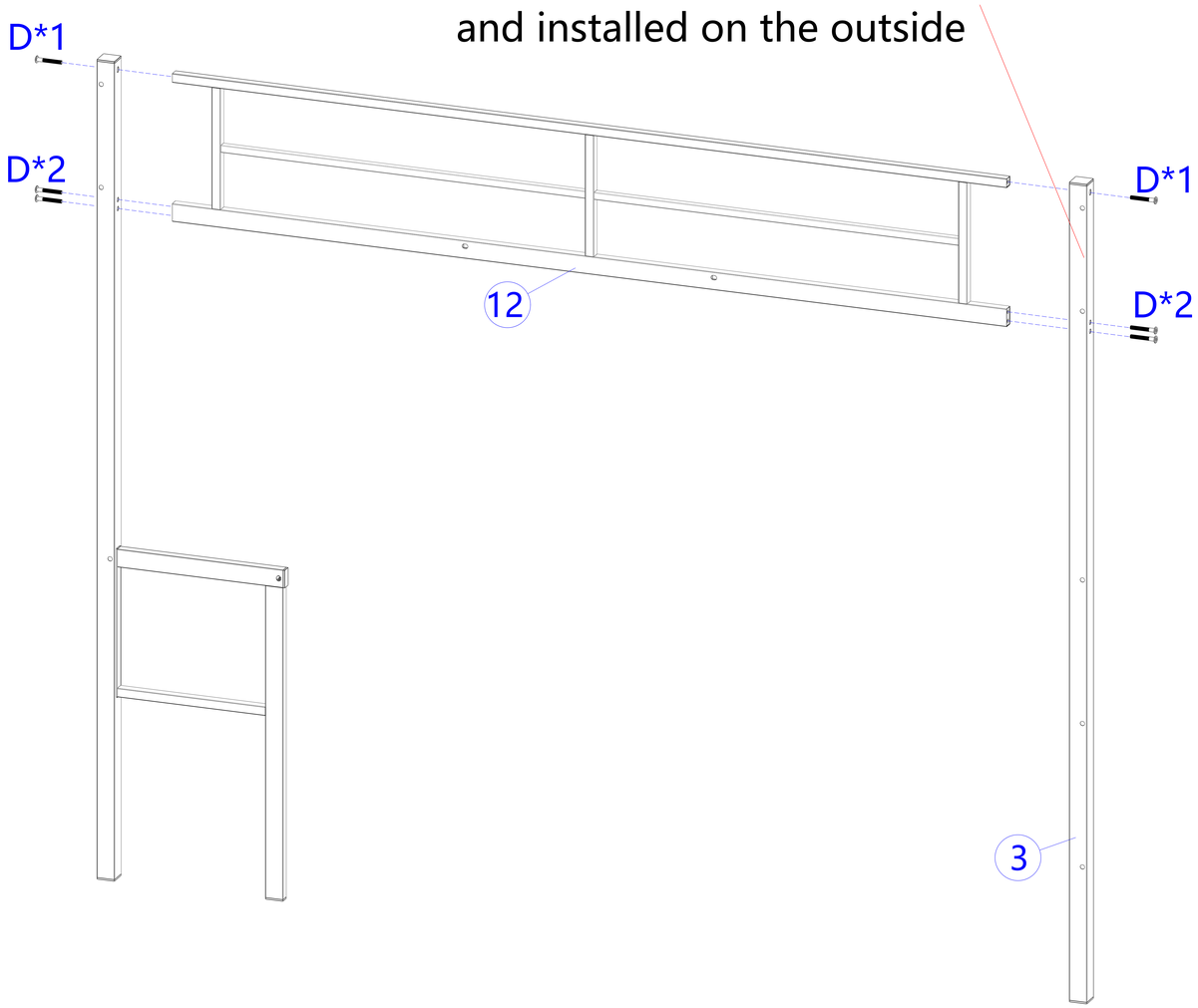

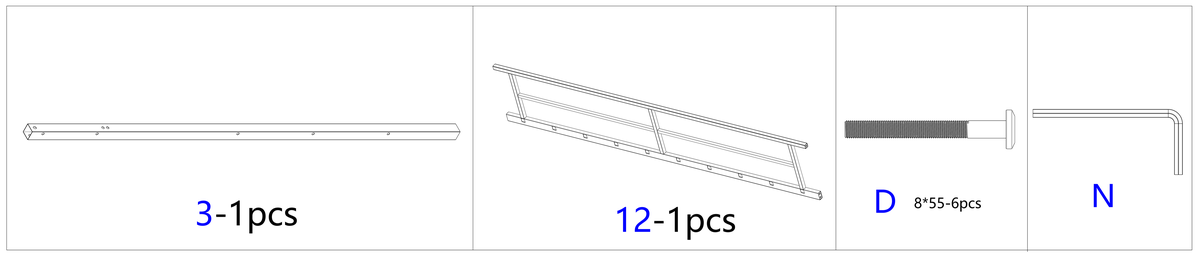

Step 3: Use hardware N, D, B to connect #2, #4, #8 and #12 together.

Attention:
the top two holes of NO.2 and NO.4 are placed and installed on the outside

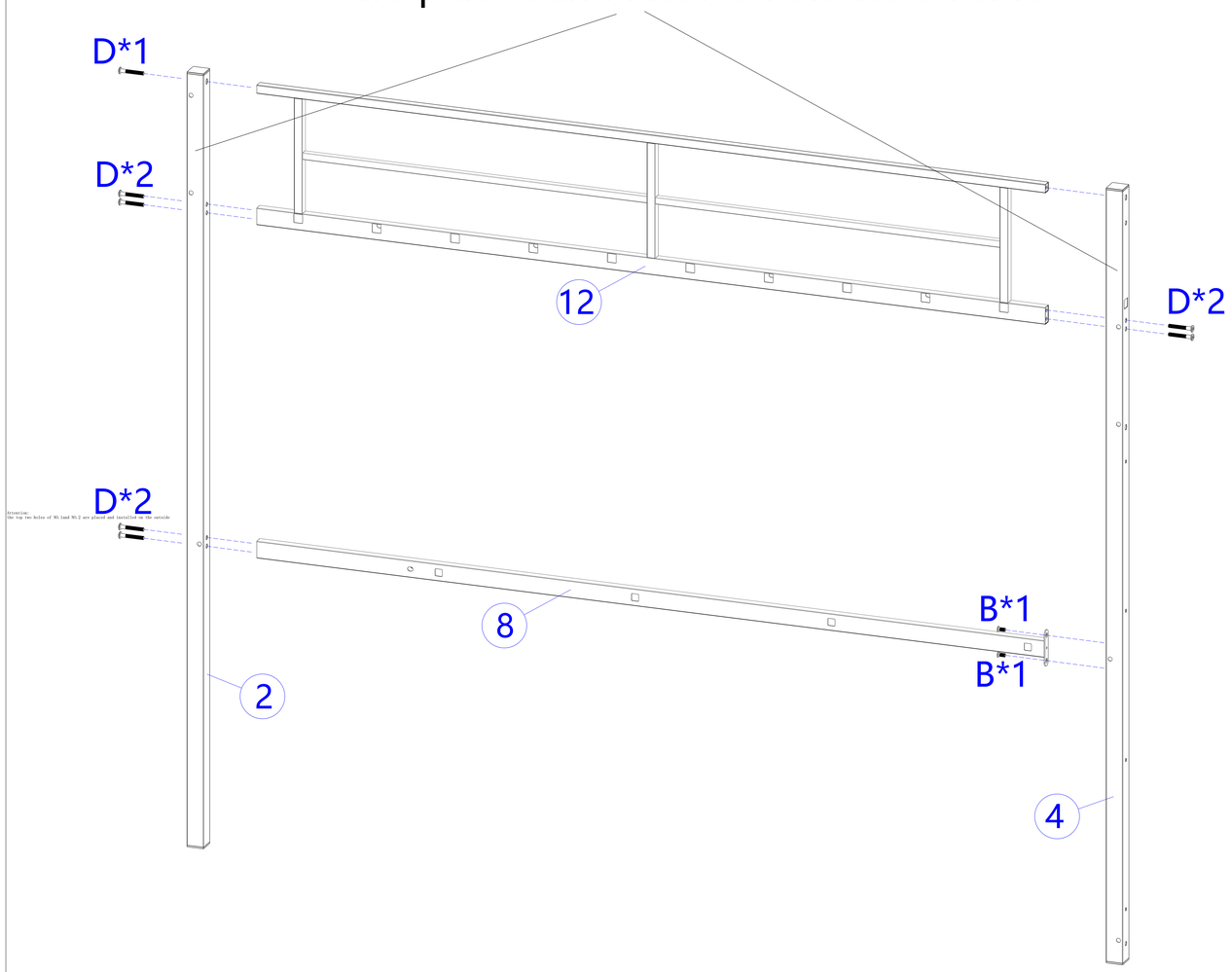

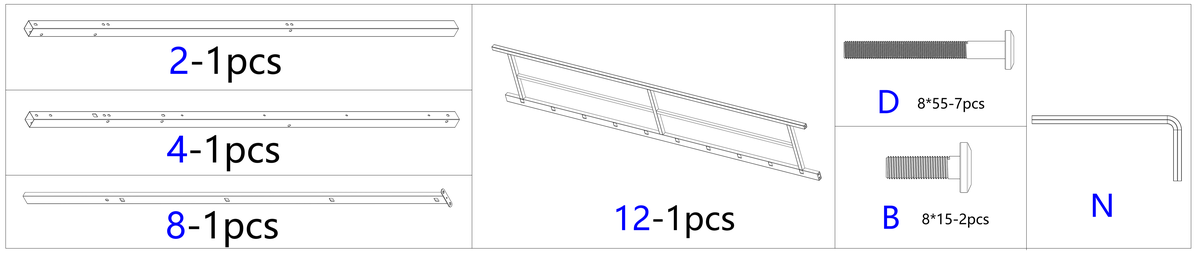

Step 4: Use hardware N, D, C to connect #6, #7, #16 to the previously installed components.

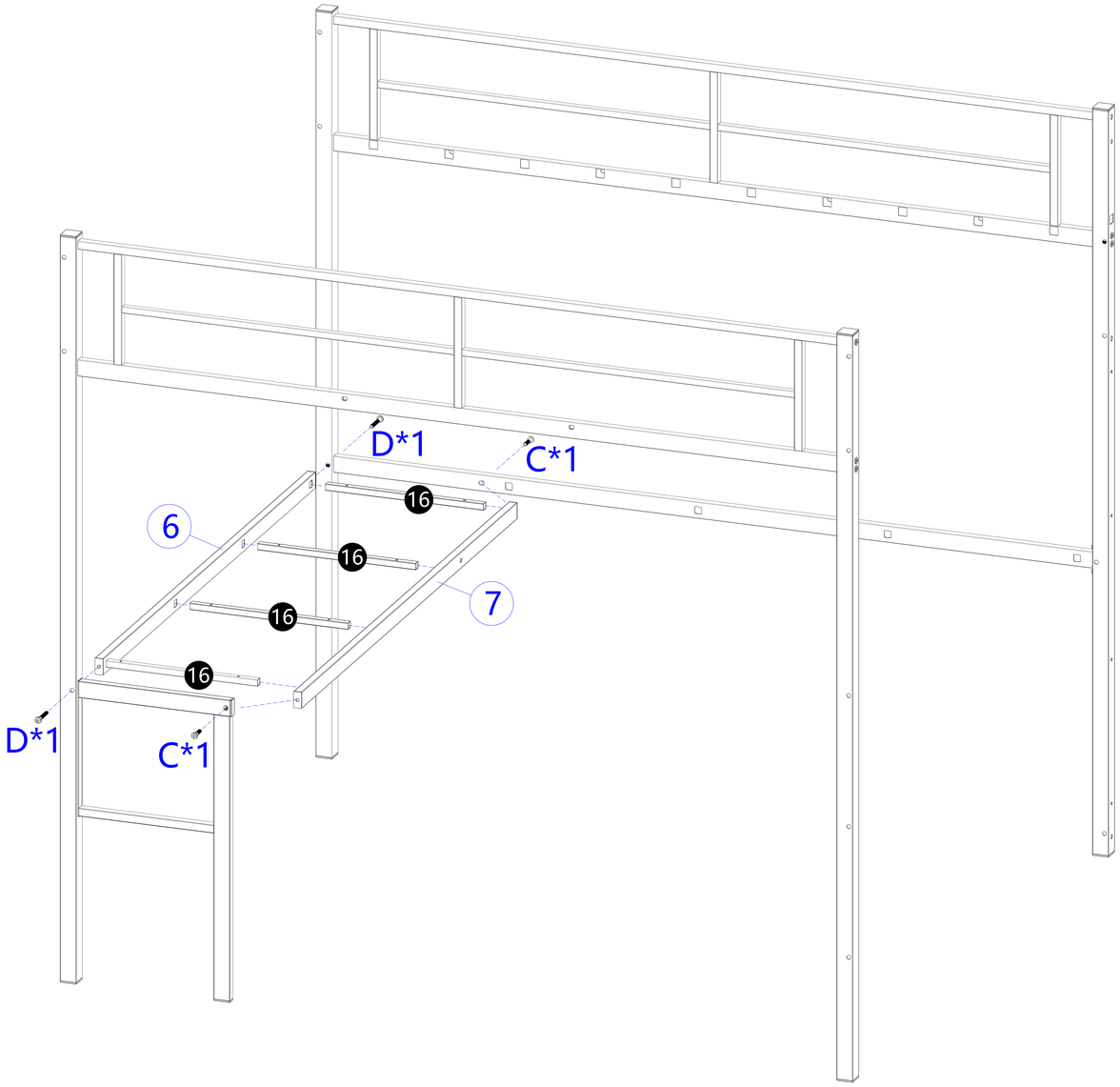

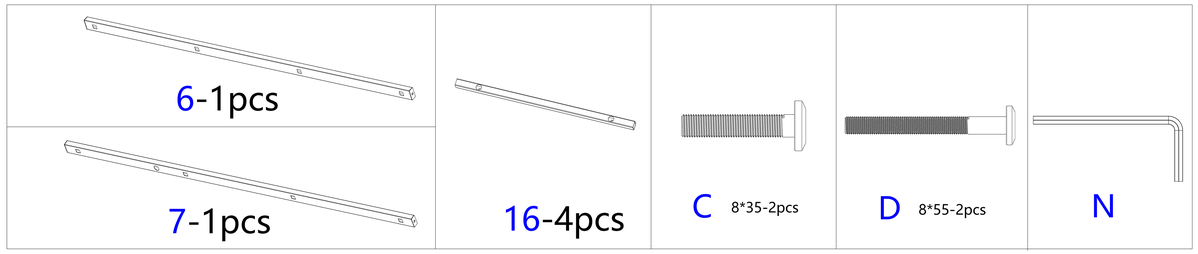

Step 5: Use hardware N and D to connect #17 and #32 to the previously installed components.

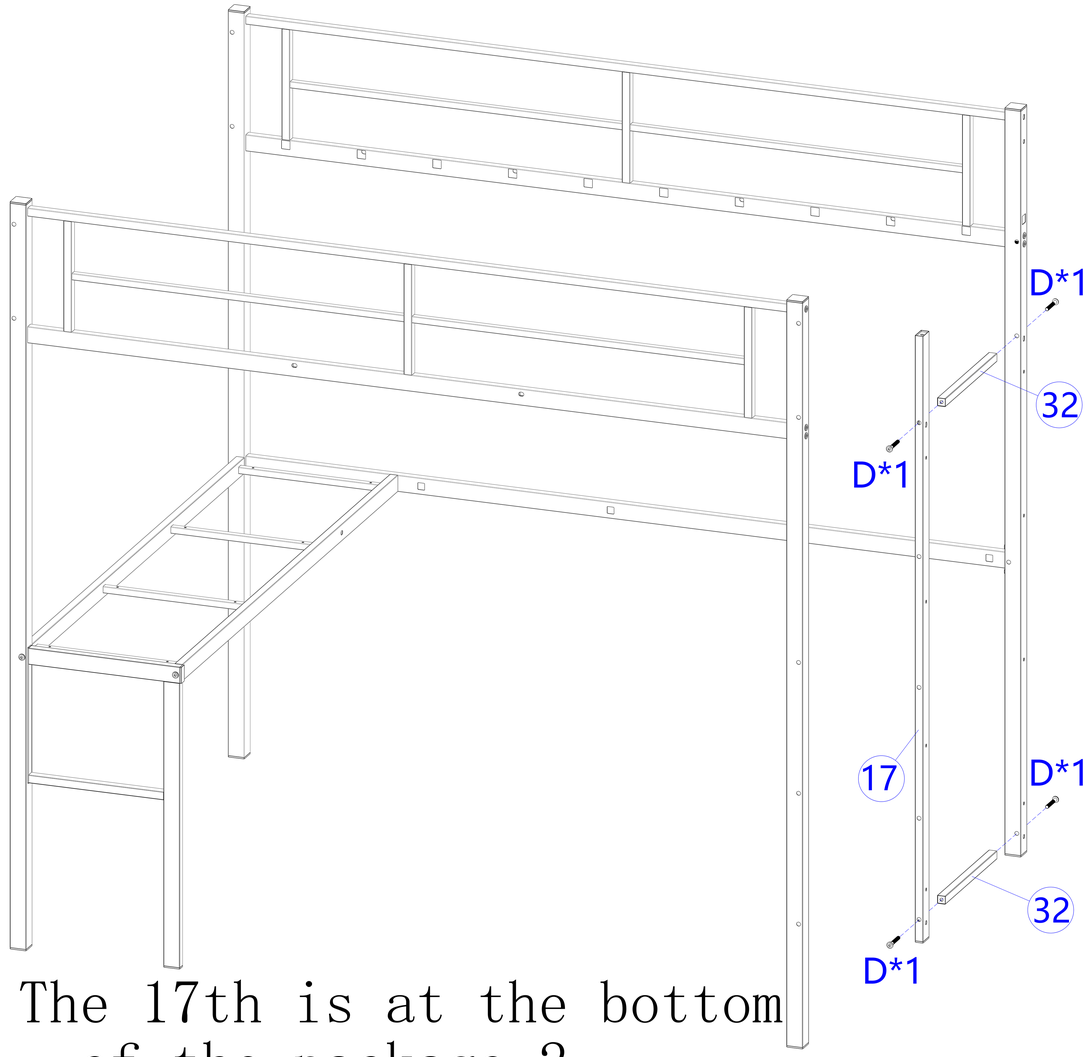

The 17th is at the bottom of the package 2.

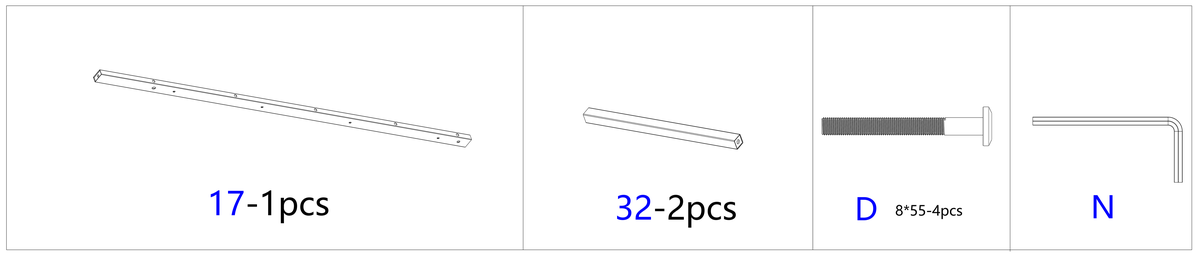

Step 6: Use hardware N, D, B, C to connect #9, #16, #18 to the previously installed components.

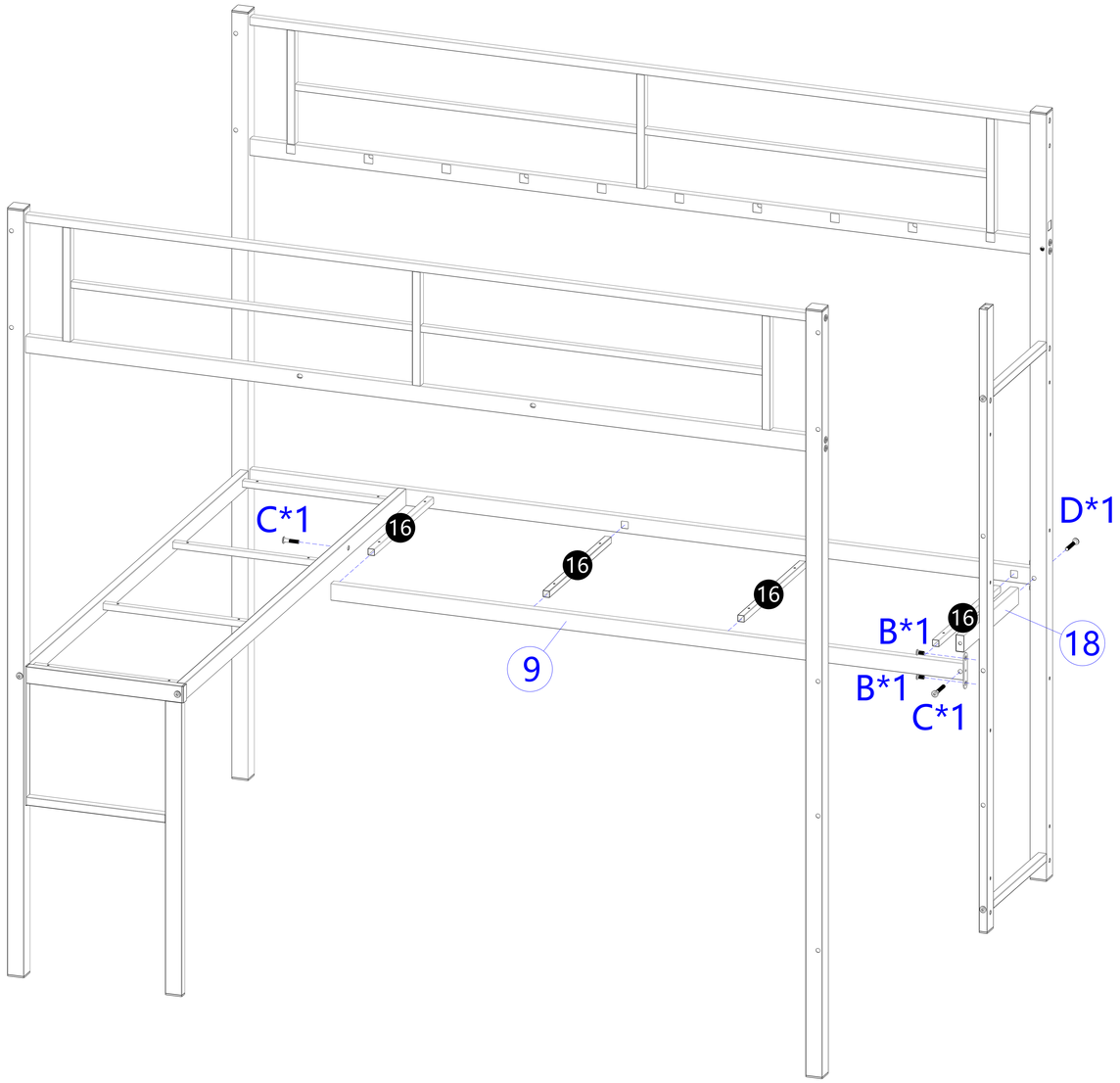

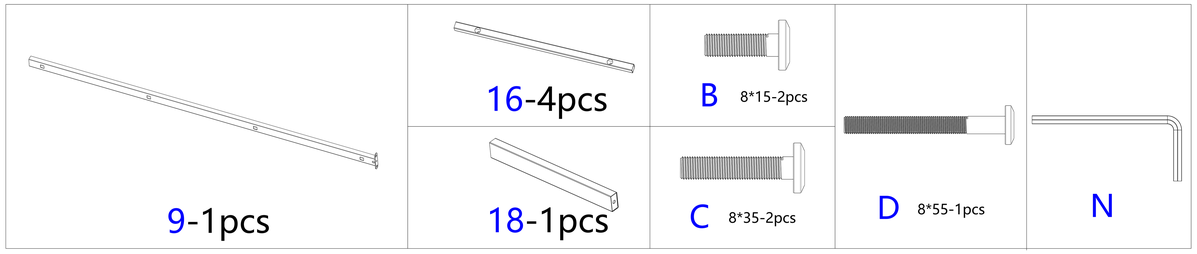

Step 7: Use hardware A and L to thread #43 and #44 together through the hole at the bottom of the shelf.

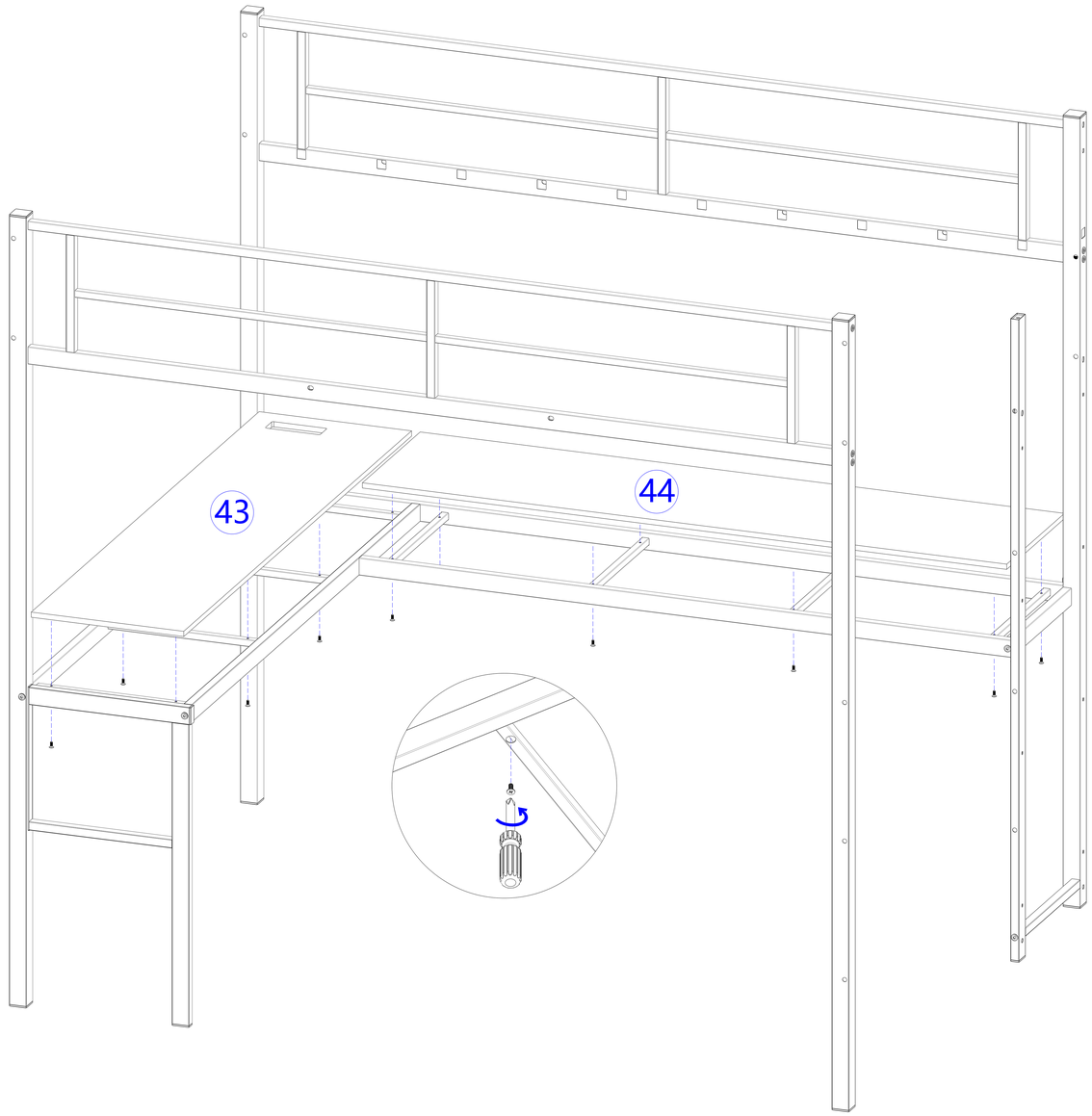

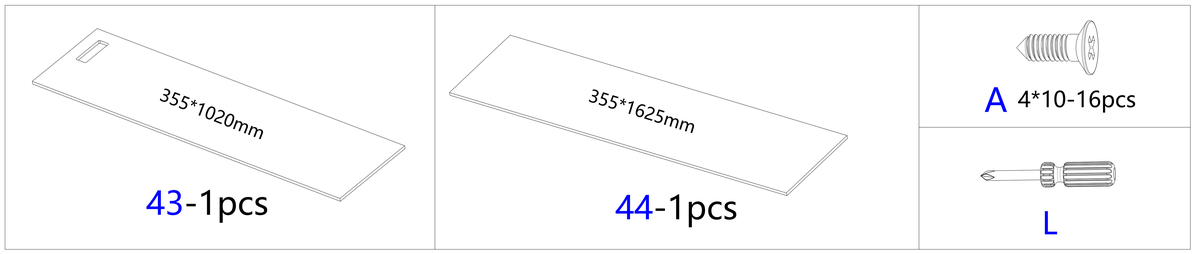

Step 8: Use hardware E, D, N to connect #10 and #11 to the previously installed components.

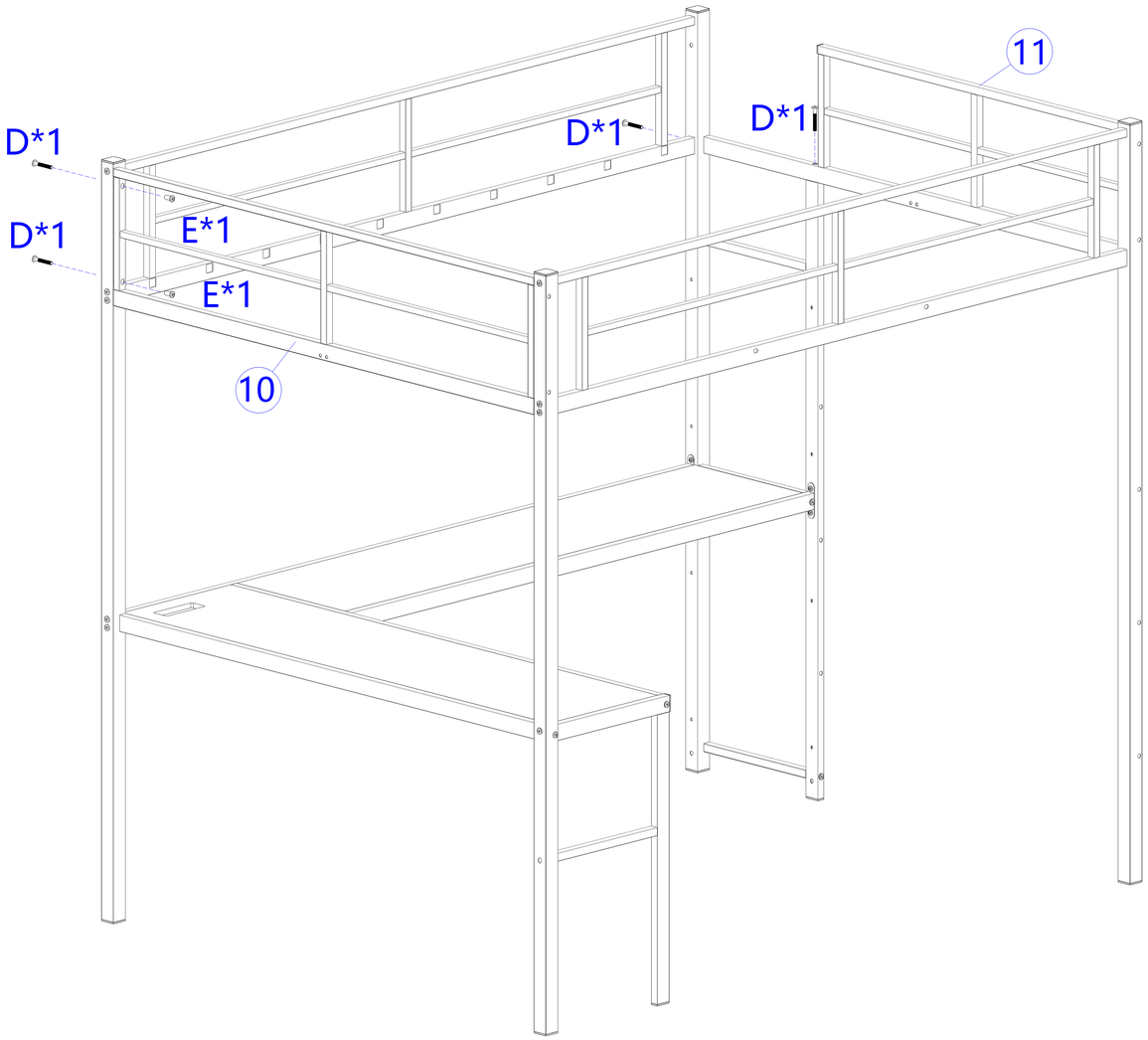

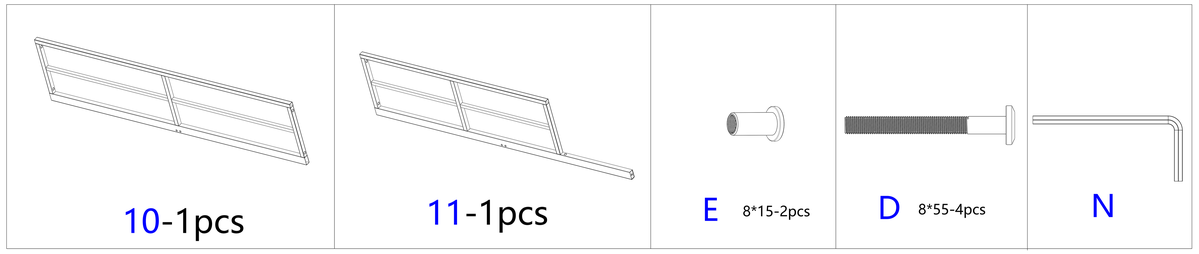

Step 9: Use hardware C and N to connect #13 to the previously installed components.

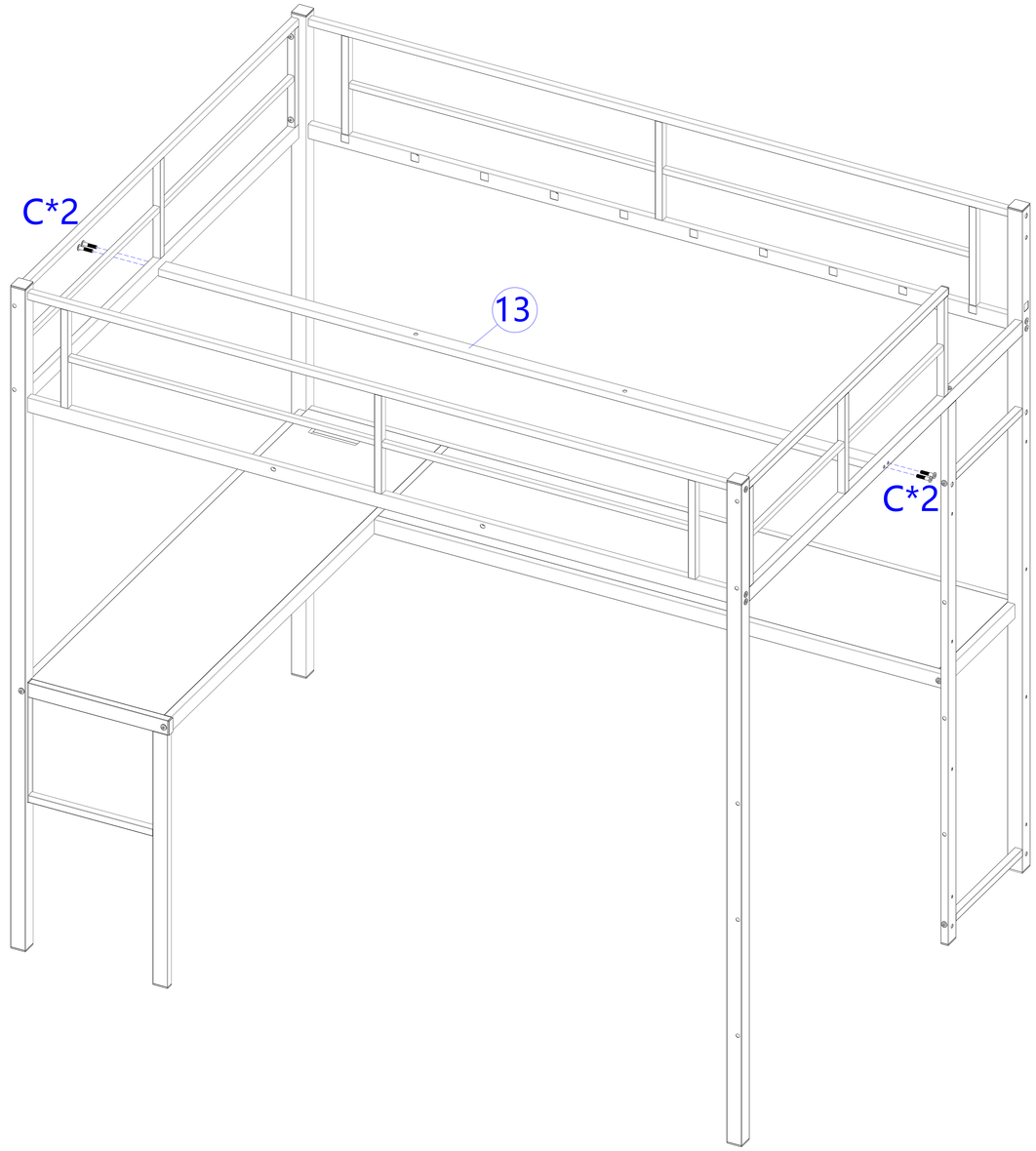

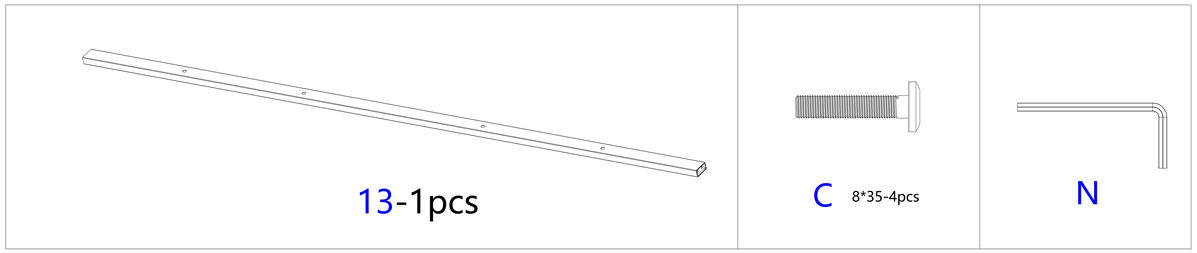

Step 10: Insert #14 and #15 into the #12 hole, use hardware C and N to tighten
and fix them at the bottom.

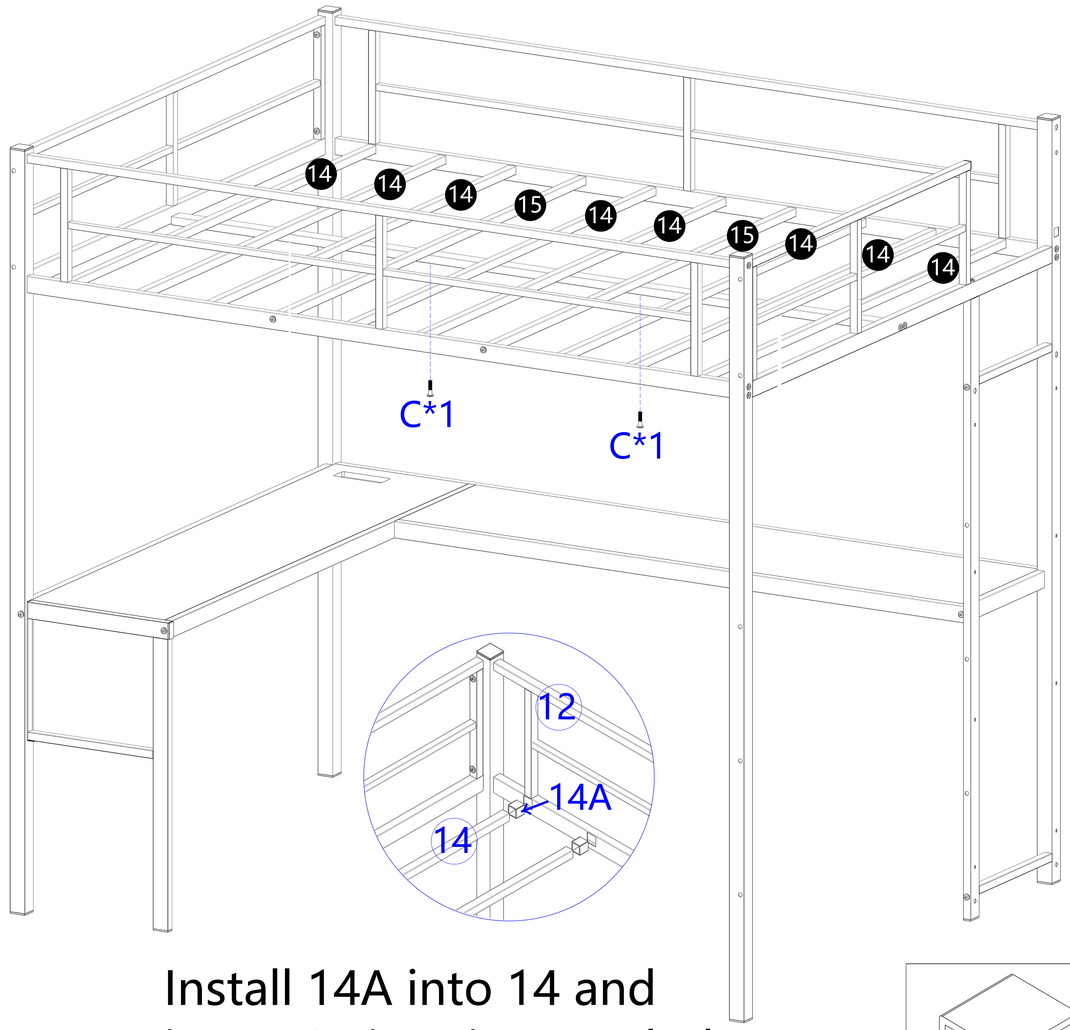

Install 14A into 14 and
insert 12 into it as a whole

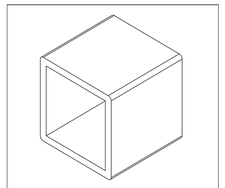

14A

14-8pcs

15-2pcs

C 8*35-2pcs

N

Step 11: Use hardware C, N, E, D to tighten the two-head hole screws #14, #15, #10, and #11.

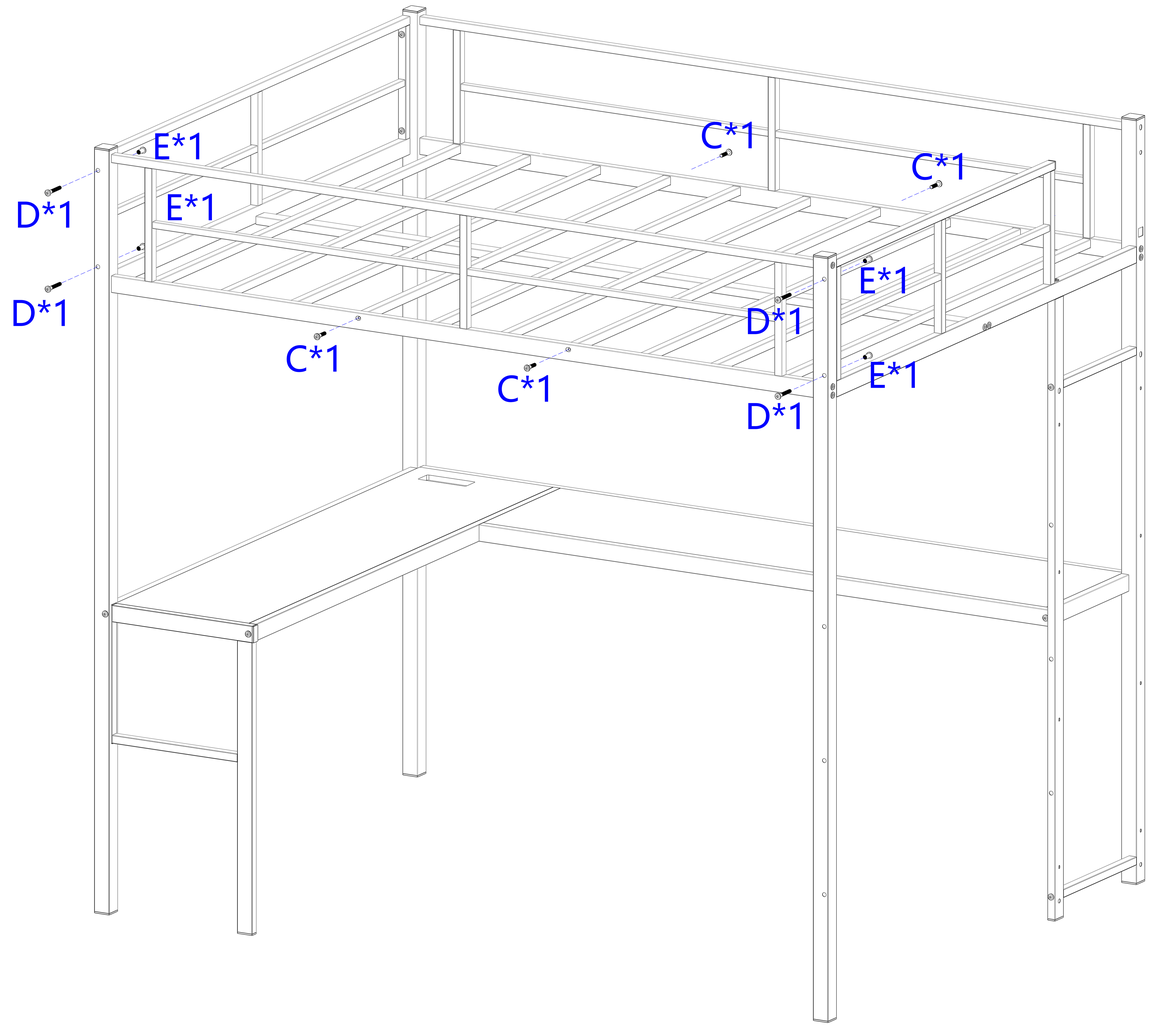

E 8*15-4pcs

C 8*35-4pcs

D 8*55-4pcs

N

Step 12: Use hardware C, N, L, G to connect #37, #19, #30 together.

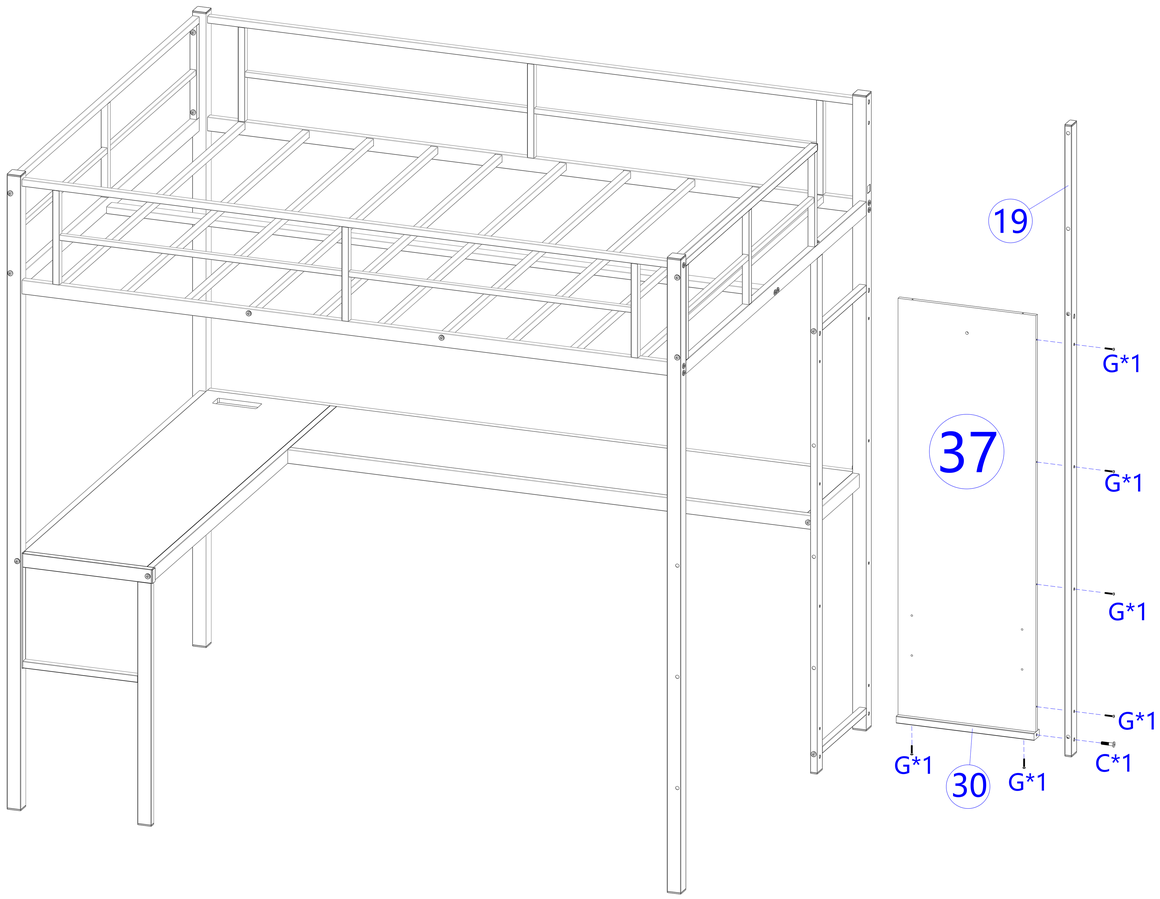

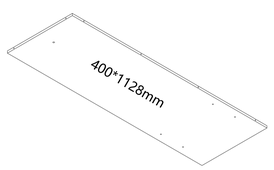 37-1pcs	19-1pcs	C 8*35-1pcs	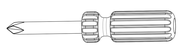 L
	30-1pcs	G 4*25-6pcs	N

Step 13: Use hardware C, N, L, H, D, E to connect #34 and #35 to the previously installed components.

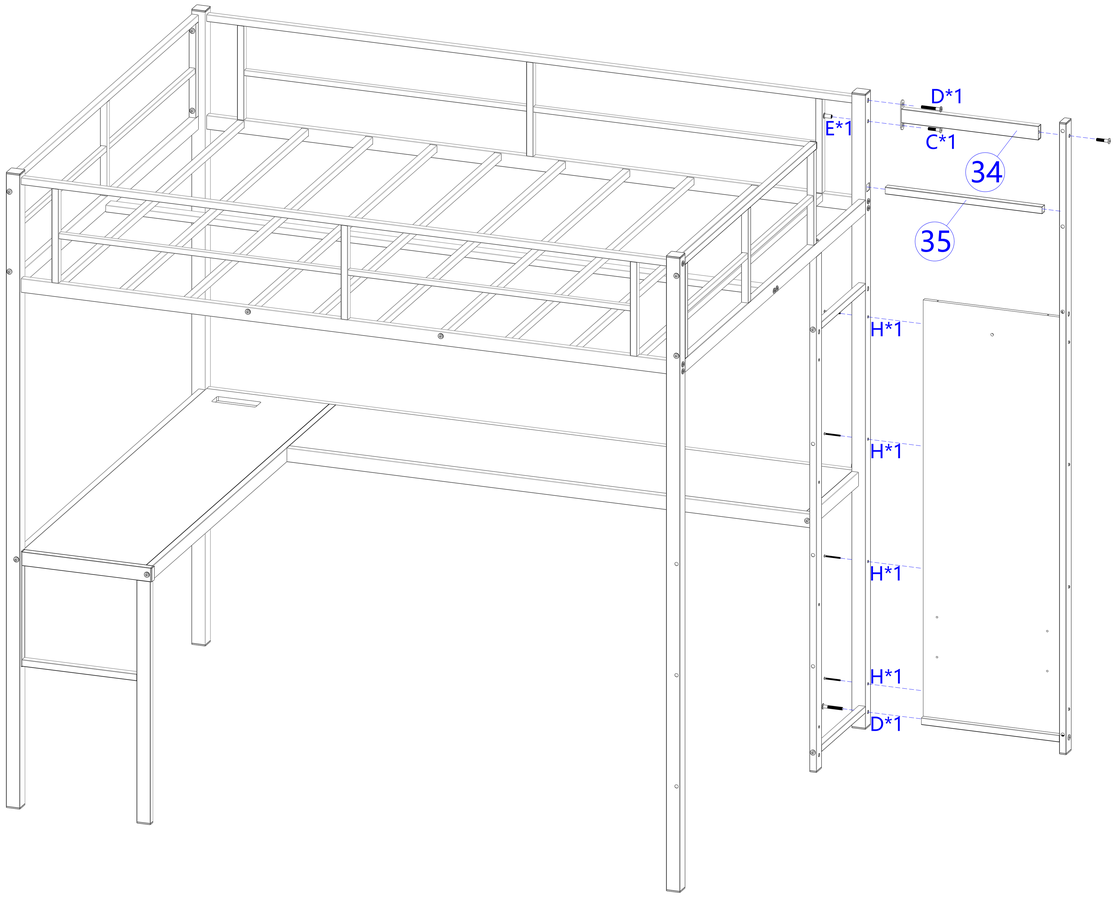

34-1pcs	35-1pcs	C 8*35-2pcs	E 8*15-1pcs	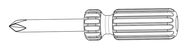 L
		D 8*55-2pcs	H 4*45-4pcs	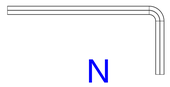 N

Step 14: Use hardware C, N, L, G to connect #37, #20, #30 to the previously installed components.

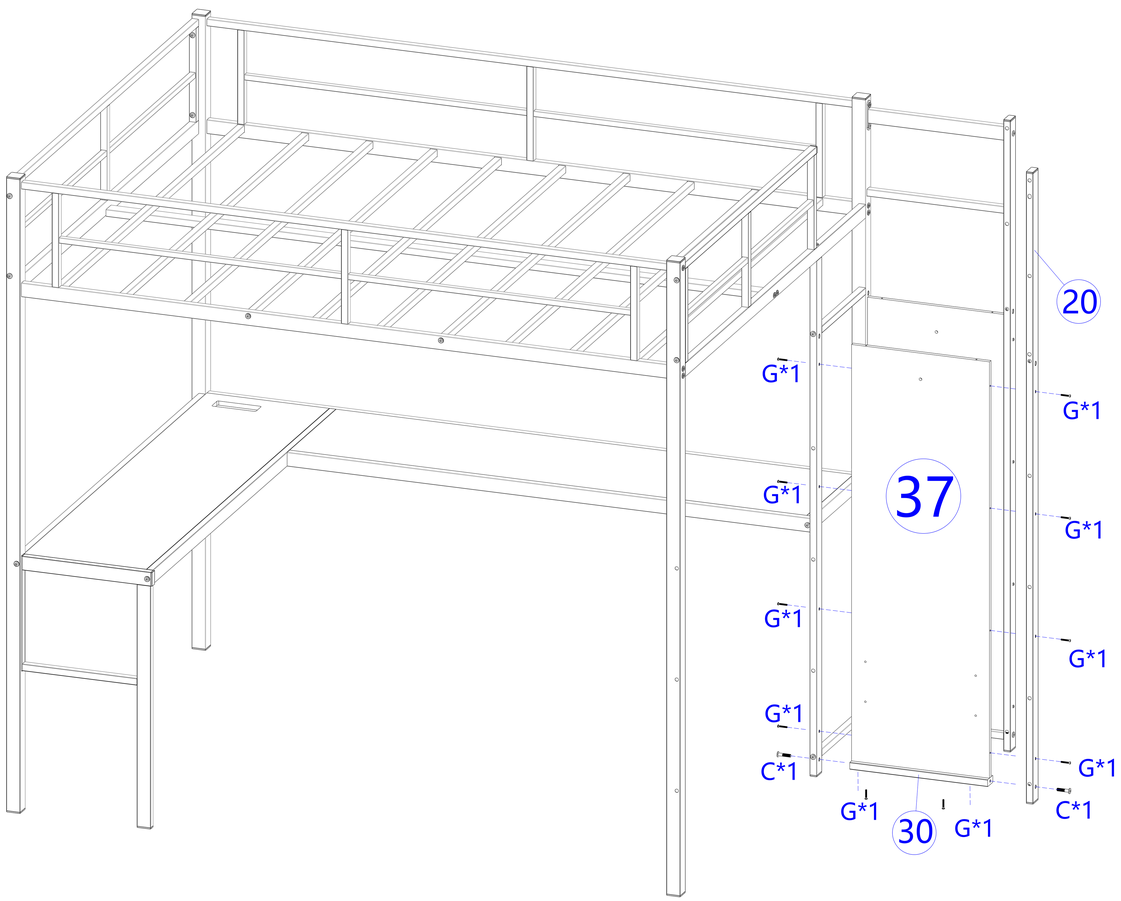

400*1128mm 37-1pcs	20-1pcs	C 8*35-2pcs	L
	30-1pcs	G 4*25-10pcs	N

Step 15: Use hardware C, D, N to connect #32, #31, #36, #33 to the previously installed components.

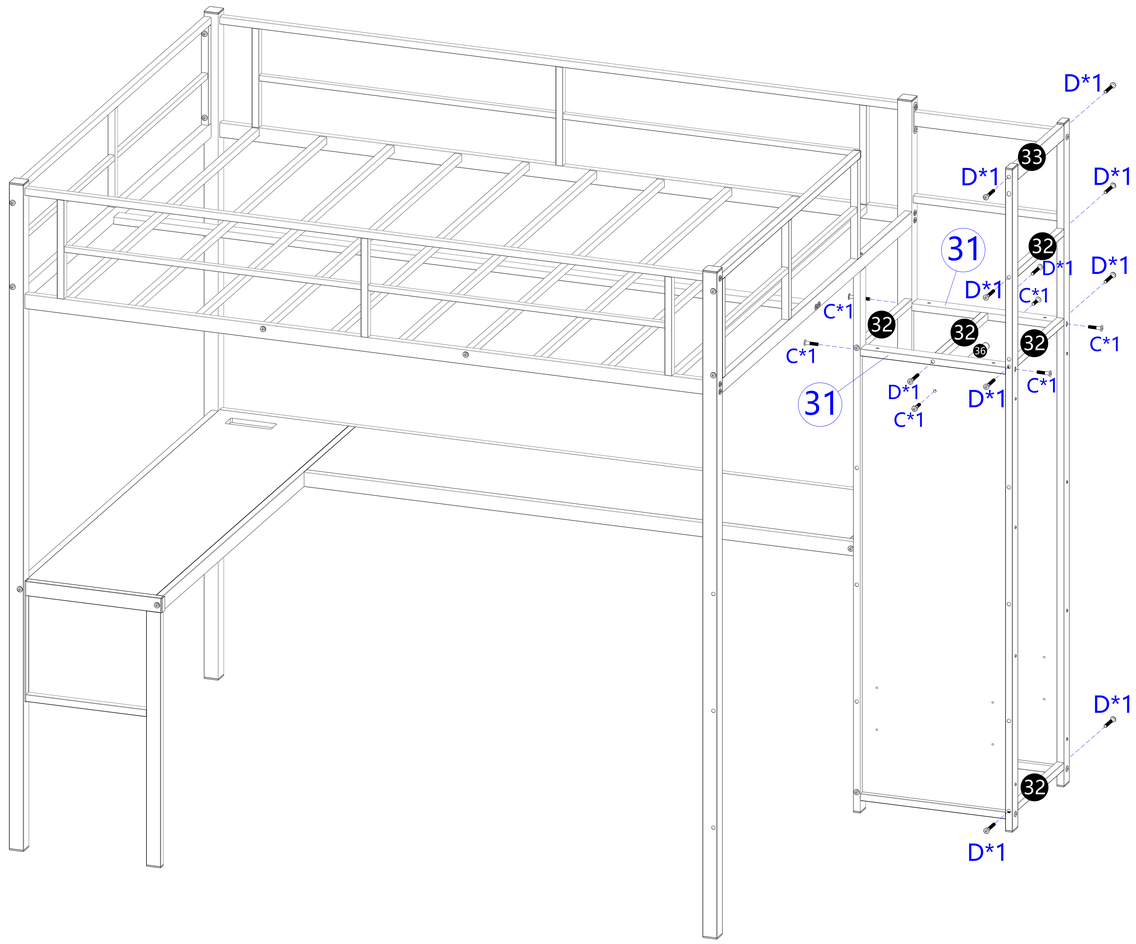

32-1pcs	31-2pcs	36-1pcs	C 8*35-5pcs	N
		33-1pcs	D 8*55-11pcs	

Step 16: Use hardware H, F, L to fix #42, #43 to the previously installed component holes.

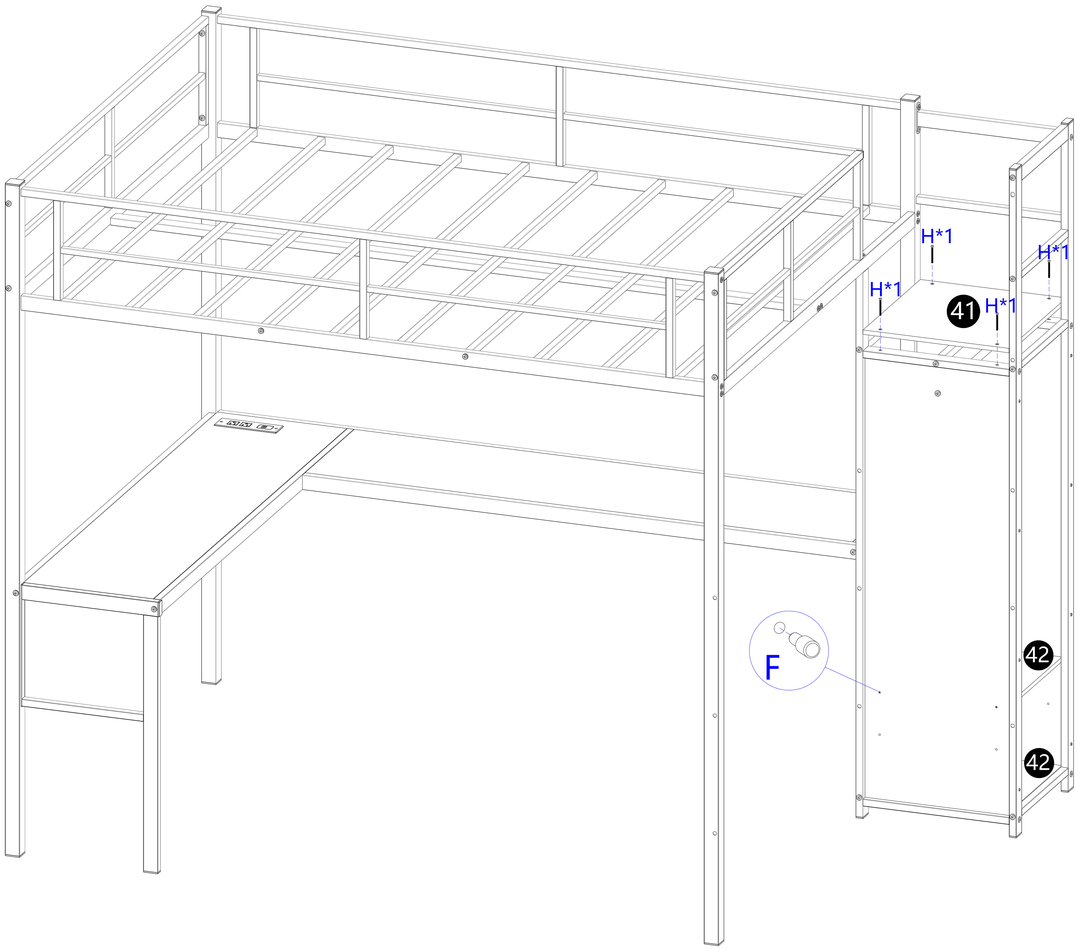

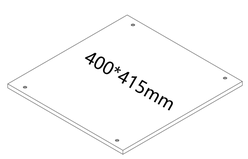 41-1pcs	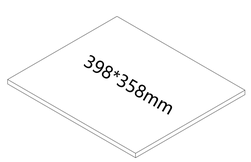 42-2pcs	H 4*45-4pcs 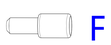 F 5*10-4pcs	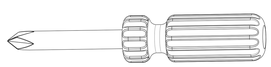 L

Step 17: Use hardware D and N to connect #21, #22 and #23 to the previously installed components.

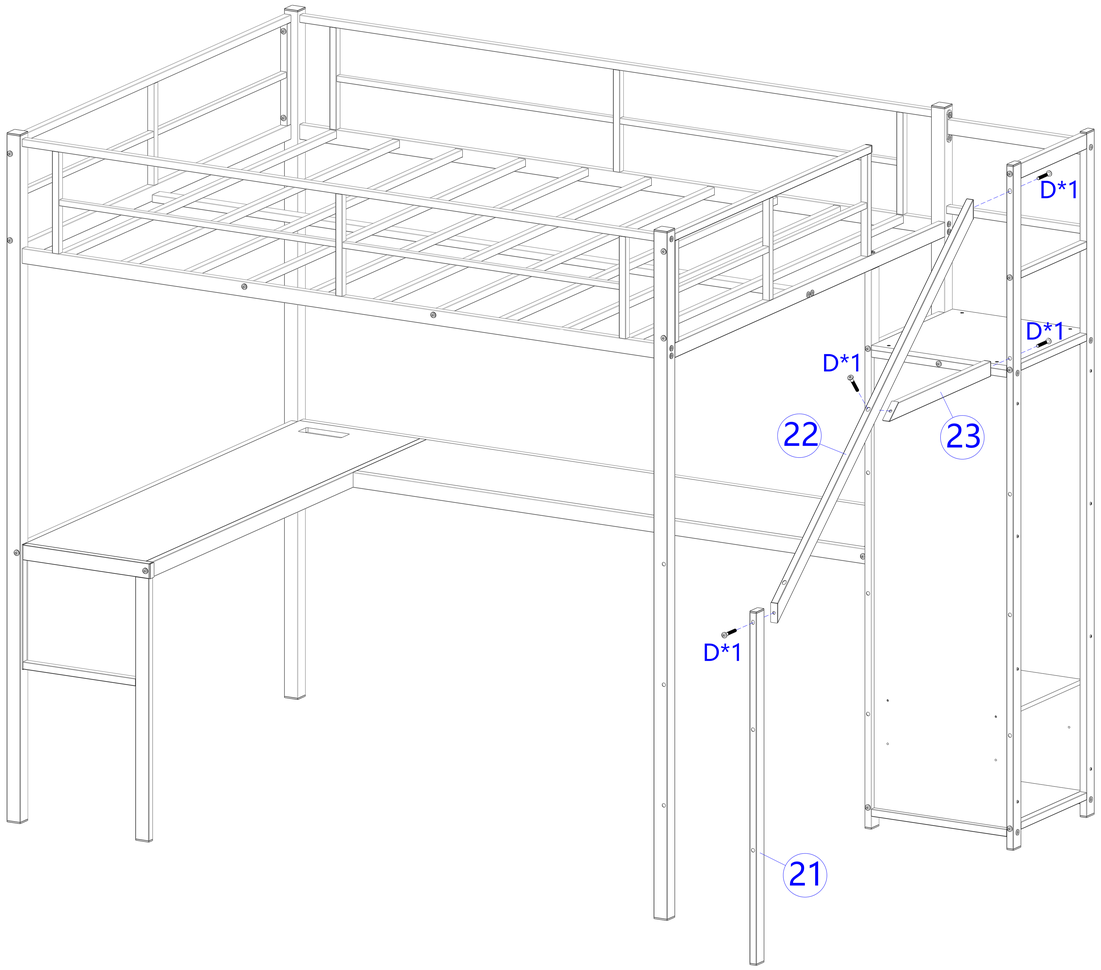

21-1pcs	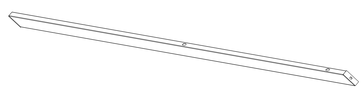 22-1pcs	23-1pcs	D 8*55-4pcs 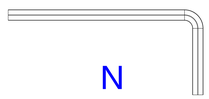 N

Step 18: Use hardware C, L, D, N to connect #38, #27, #28, #29 to the previously installed components.

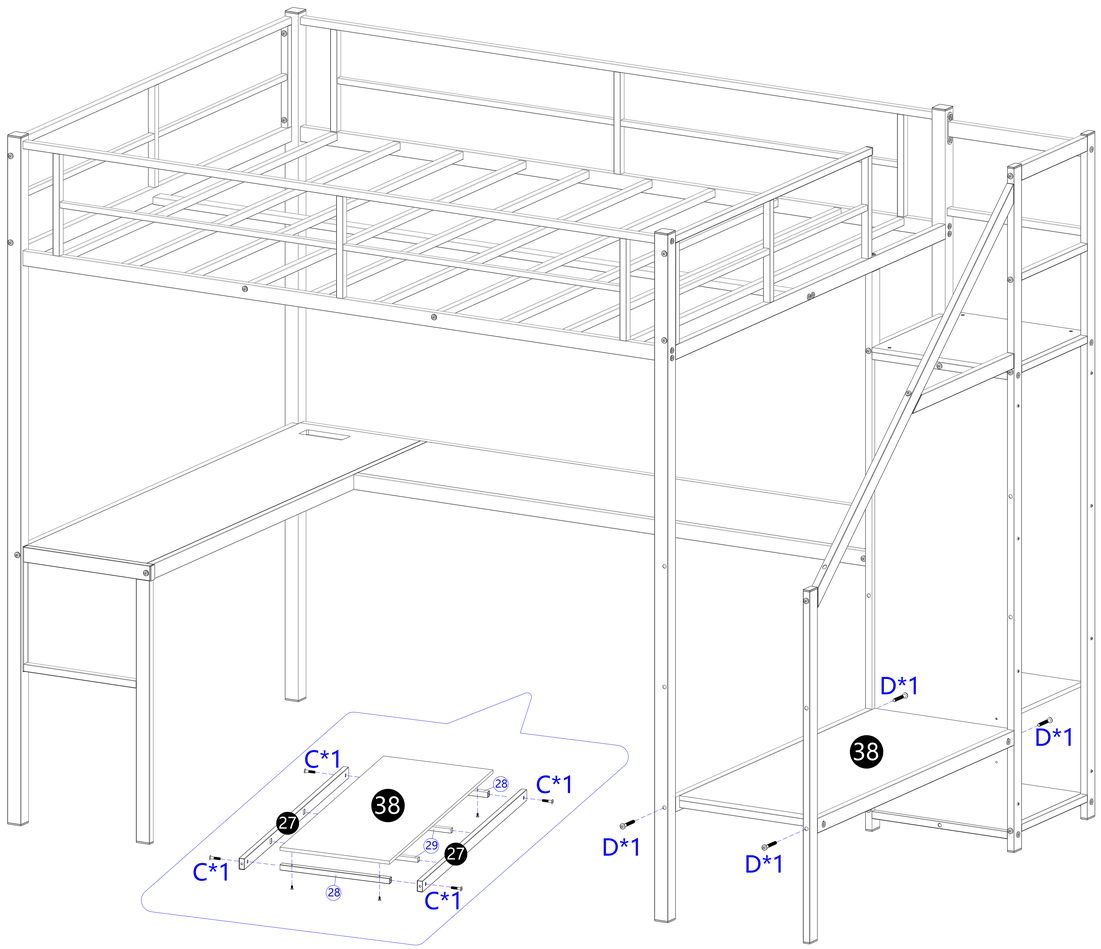

400*619mm 38-1pcs	27-2pcs	29-2pcs	C 8*35-4pcs	L
	28-2pcs	A 4*10-4pcs	D 8*55-4pcs	N

Step 19: Use hardware C, L, D, N to connect #39, #26, #28, #29 to the previously installed components.

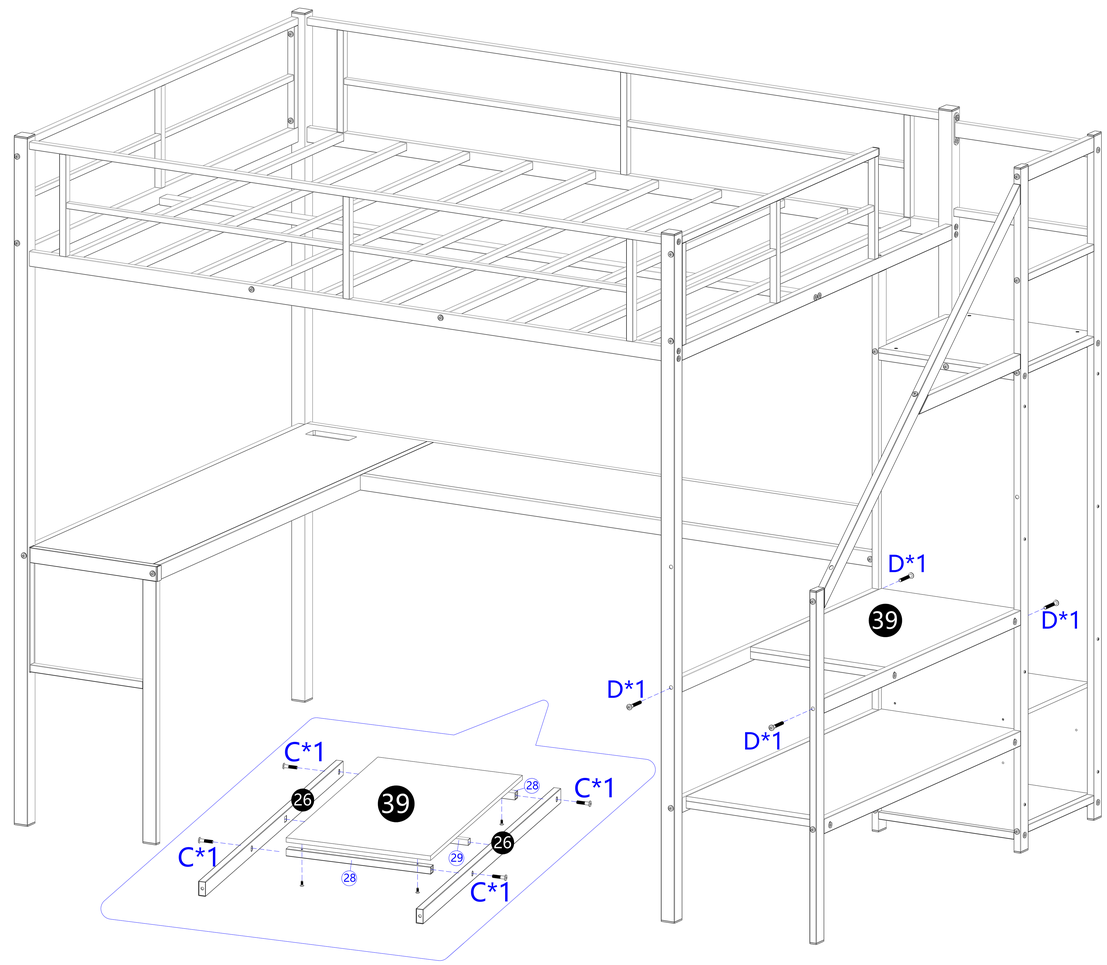

400*449mm 39-1pcs	26-2pcs	29-1pcs	C 8*35-4pcs	L
	28-2pcs	A 4*10-4pcs	D 8*55-4pcs	N

Step 20: Use hardware C, L, D, N to connect #40, #25, #28, #24 to the previously installed components.

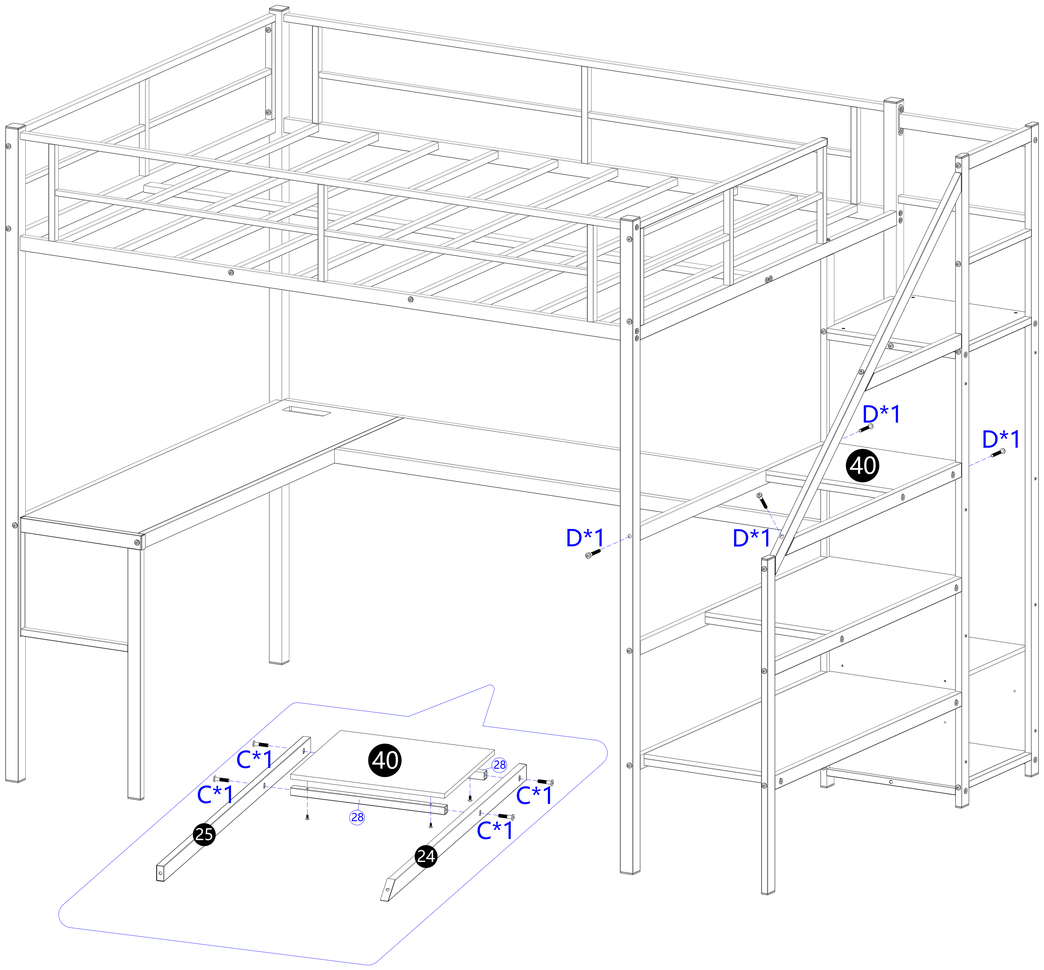

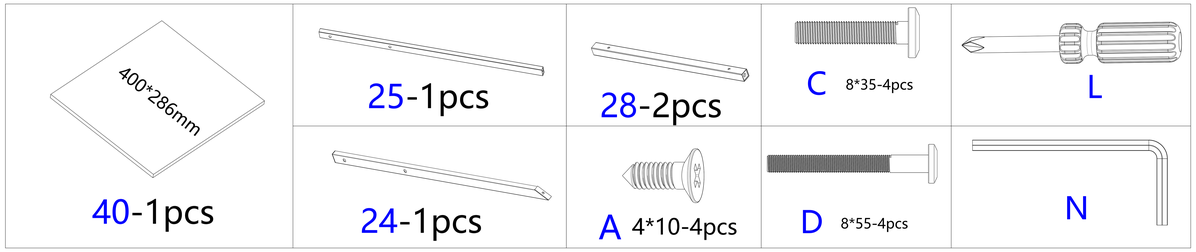

Step 21: Use hardware A, L, and fix hardware P on the #43 panel.

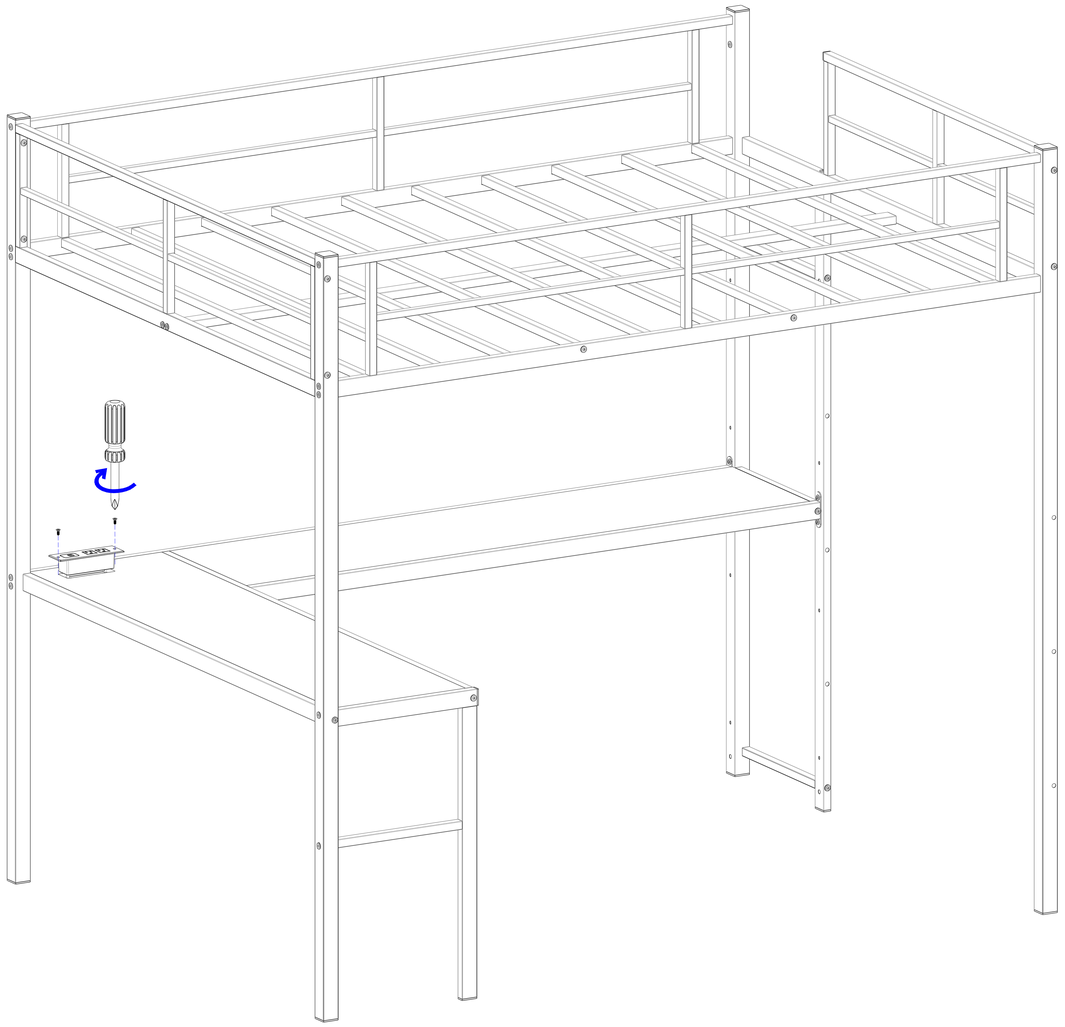

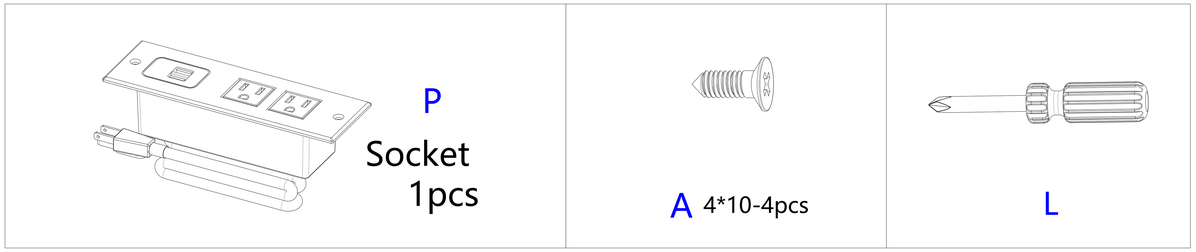

Step 22: Stick part Q (light strip) at back of #12 and connect the part P (socket) with USB.

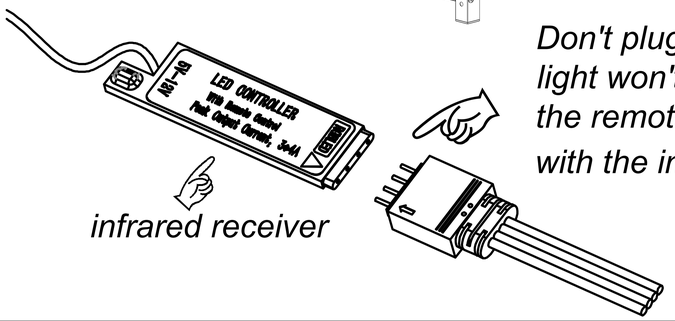

Don't plug it in the wrong way, or the light won't work and when operating the remote control should be aligned with the infrared receiver.

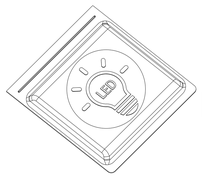

Q
Light strips
1pcs

Completed loft bed

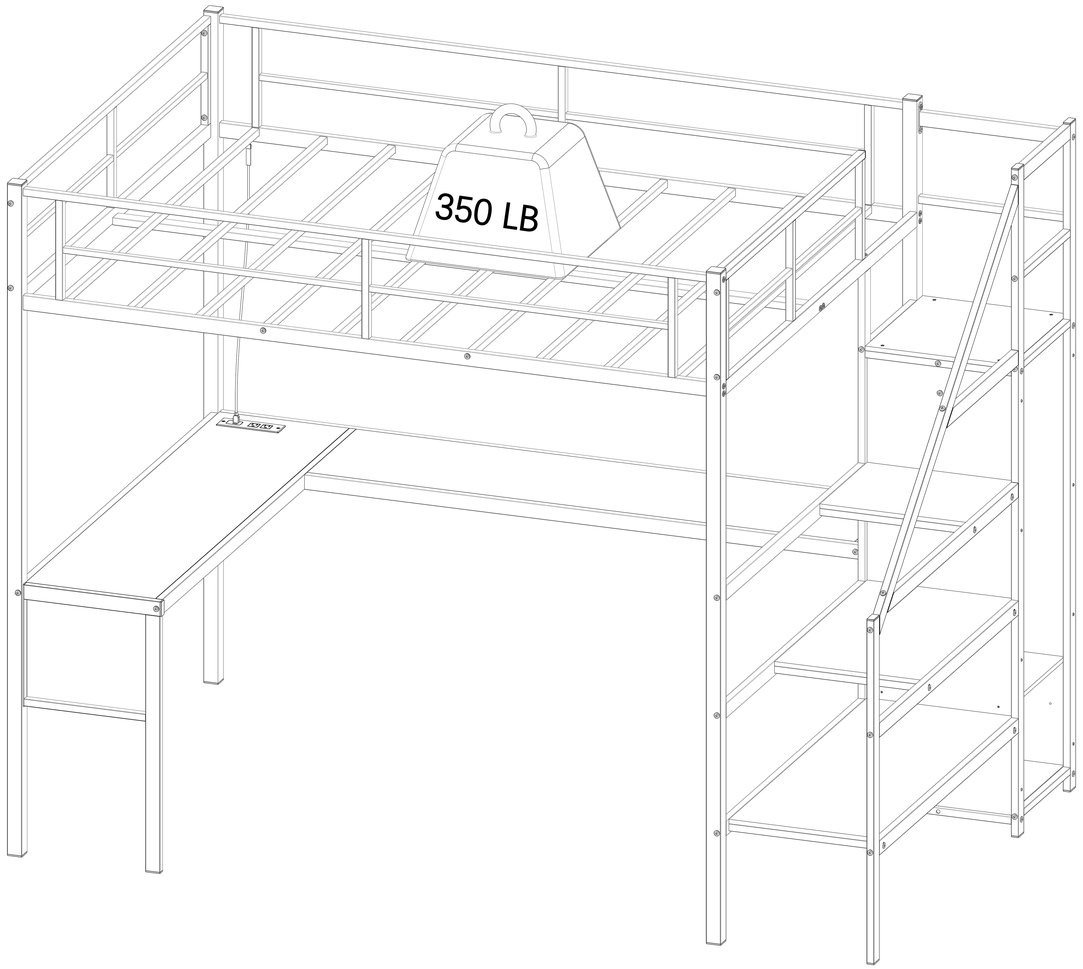

Note:
Tighten all the steps before use thank you.

Recyclable garbage