1. Rotate the latch left/right as instructed to release it.

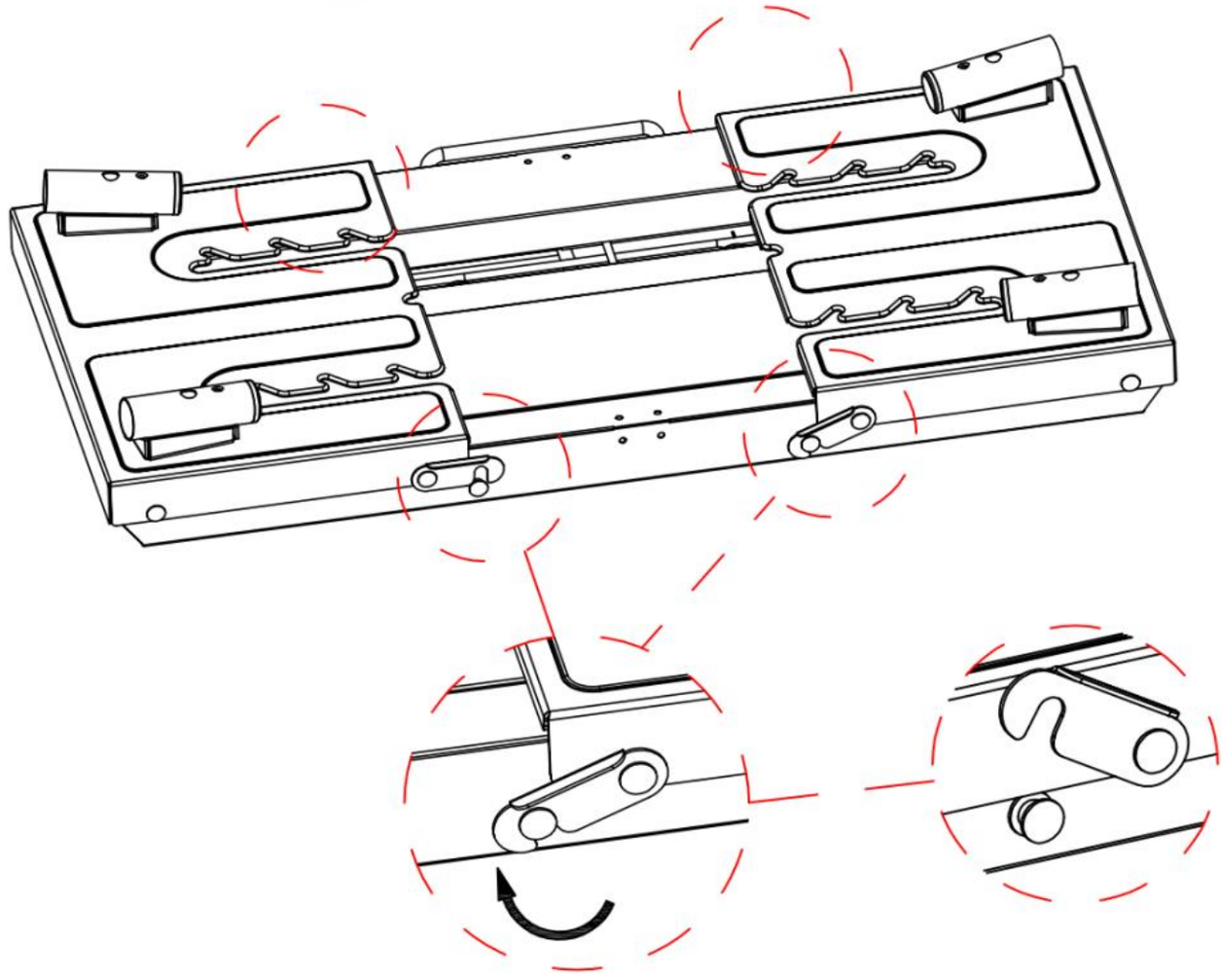

2. Lift the left and right side covers to a 90-degree angle.

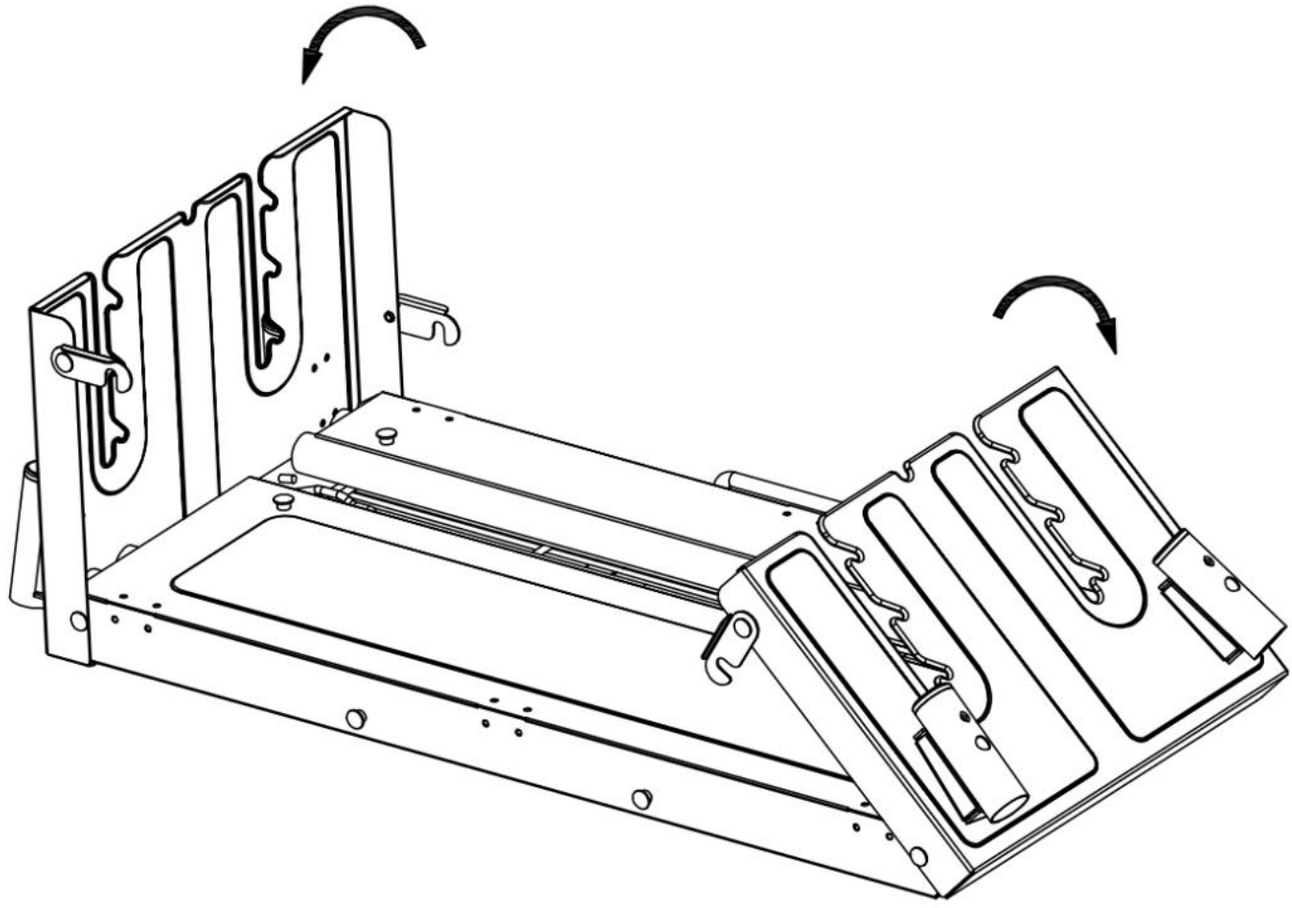

3. Lift the rear panel to a 90-degree angle, and rotate the latches left/right to lock the left and right side covers to the rear panel.

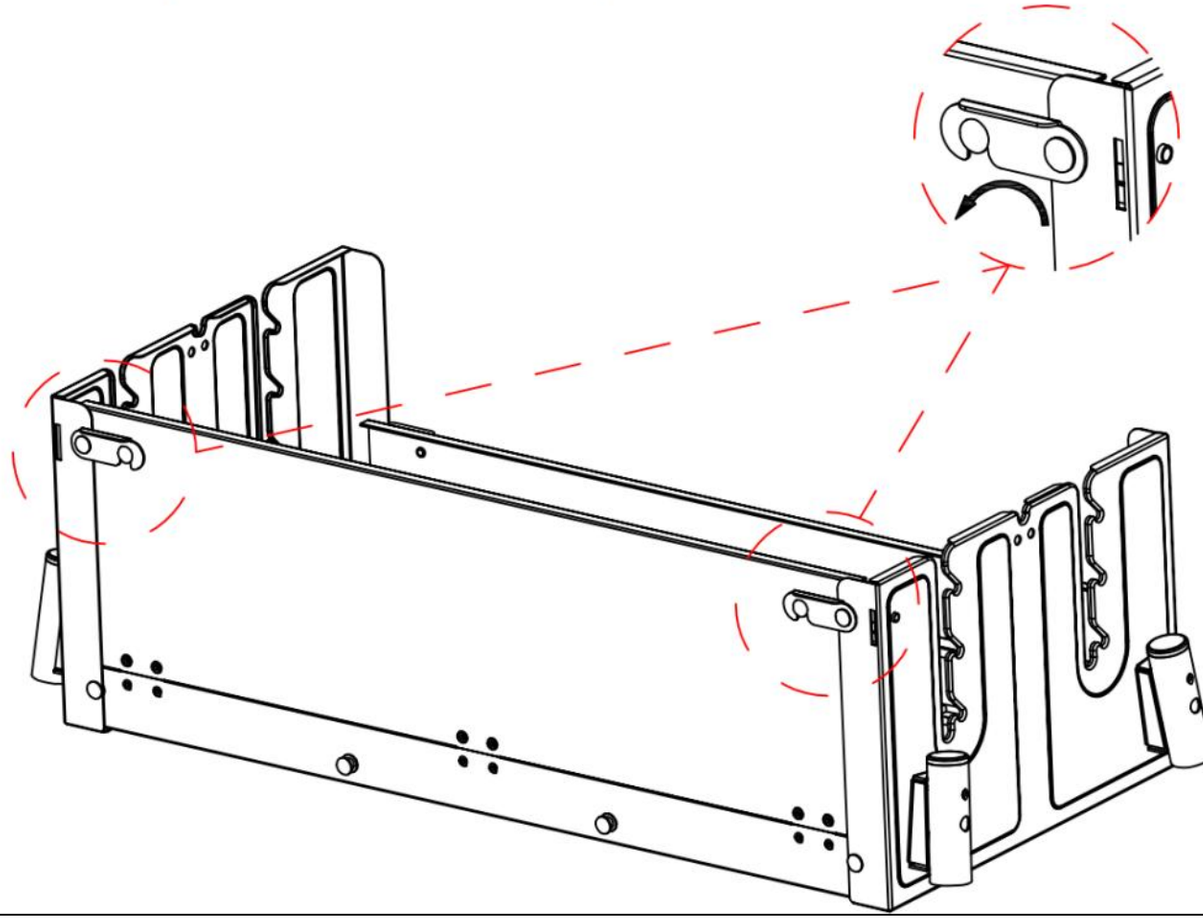

4. Lift the front panel to a 90-degree angle, rotate the left/right latches to lock the left and right side covers to the front panel. Remove the charcoal mesh, support foot tube, and seasoning shelf from inside the stove body.

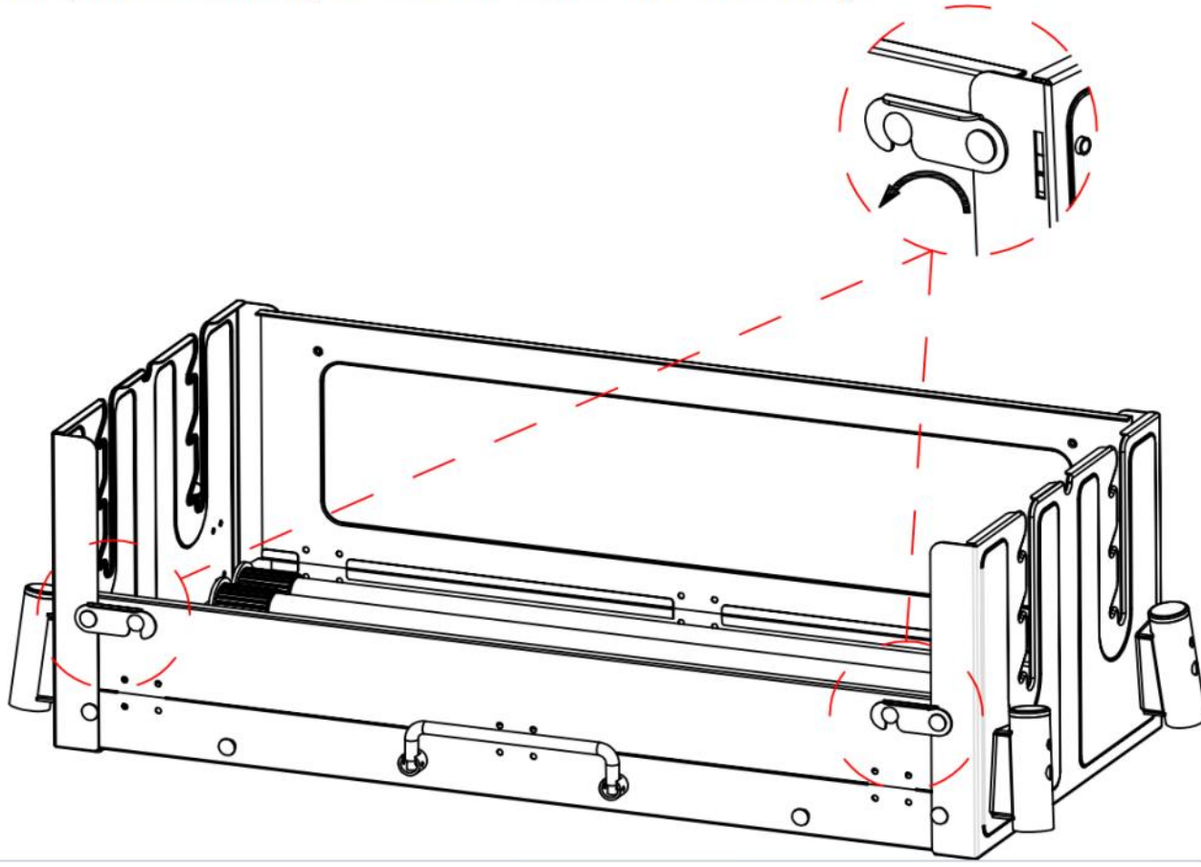

5.

Press the elastic buckle into the support foot tubes.

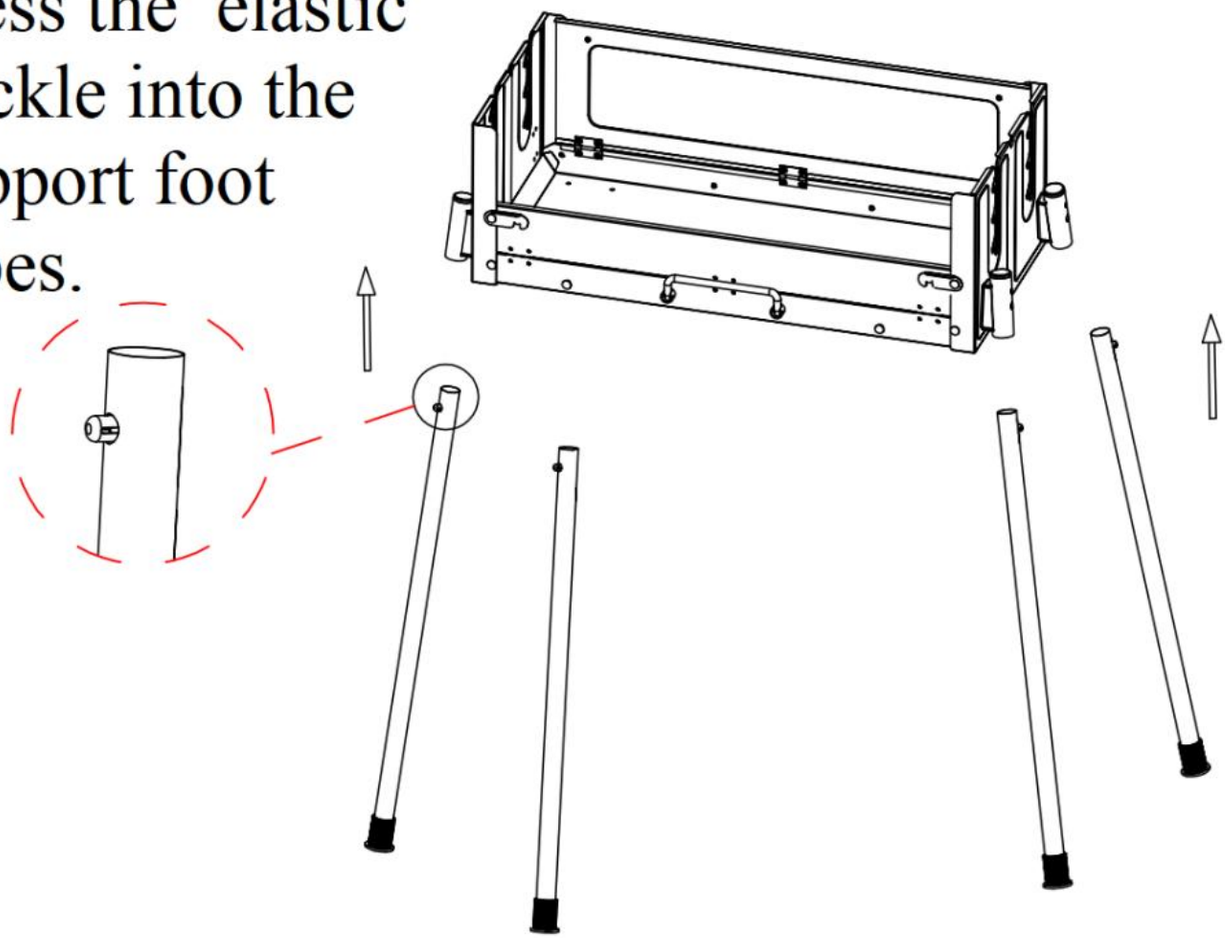

6.

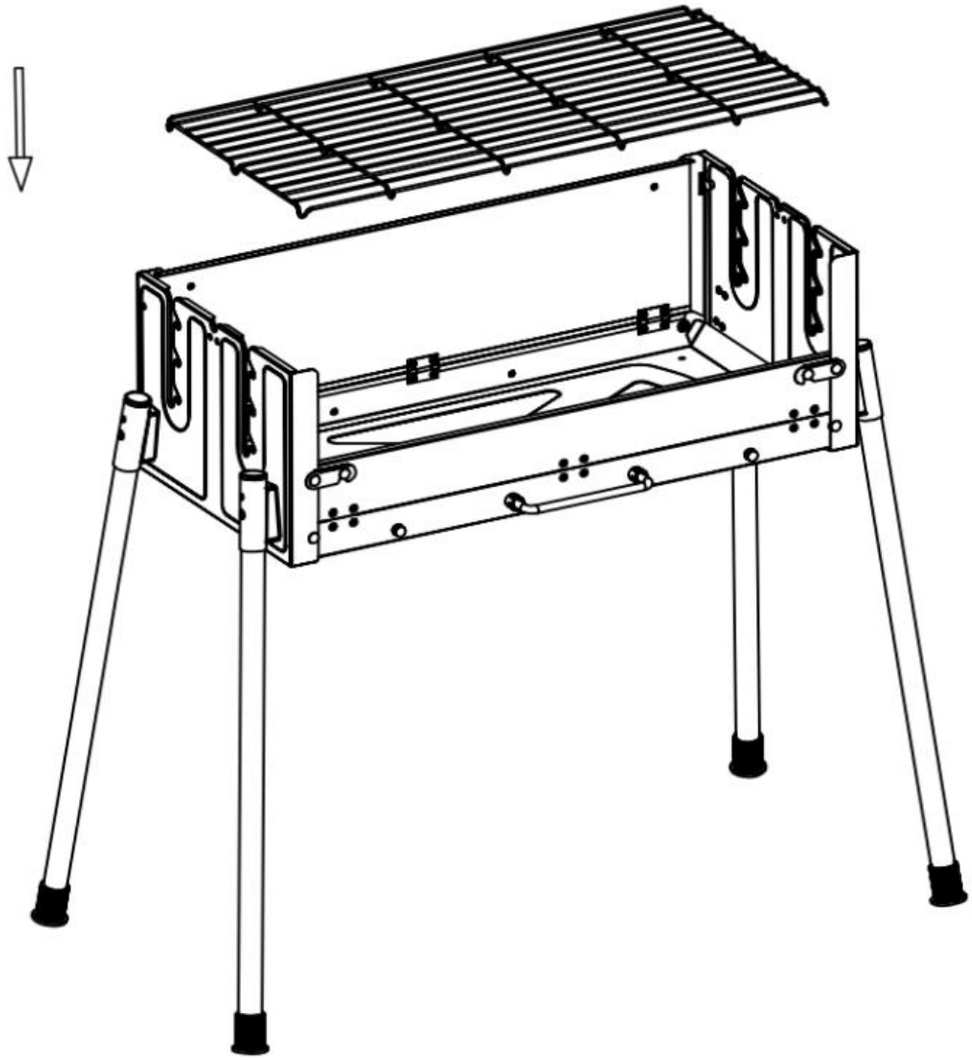

7.

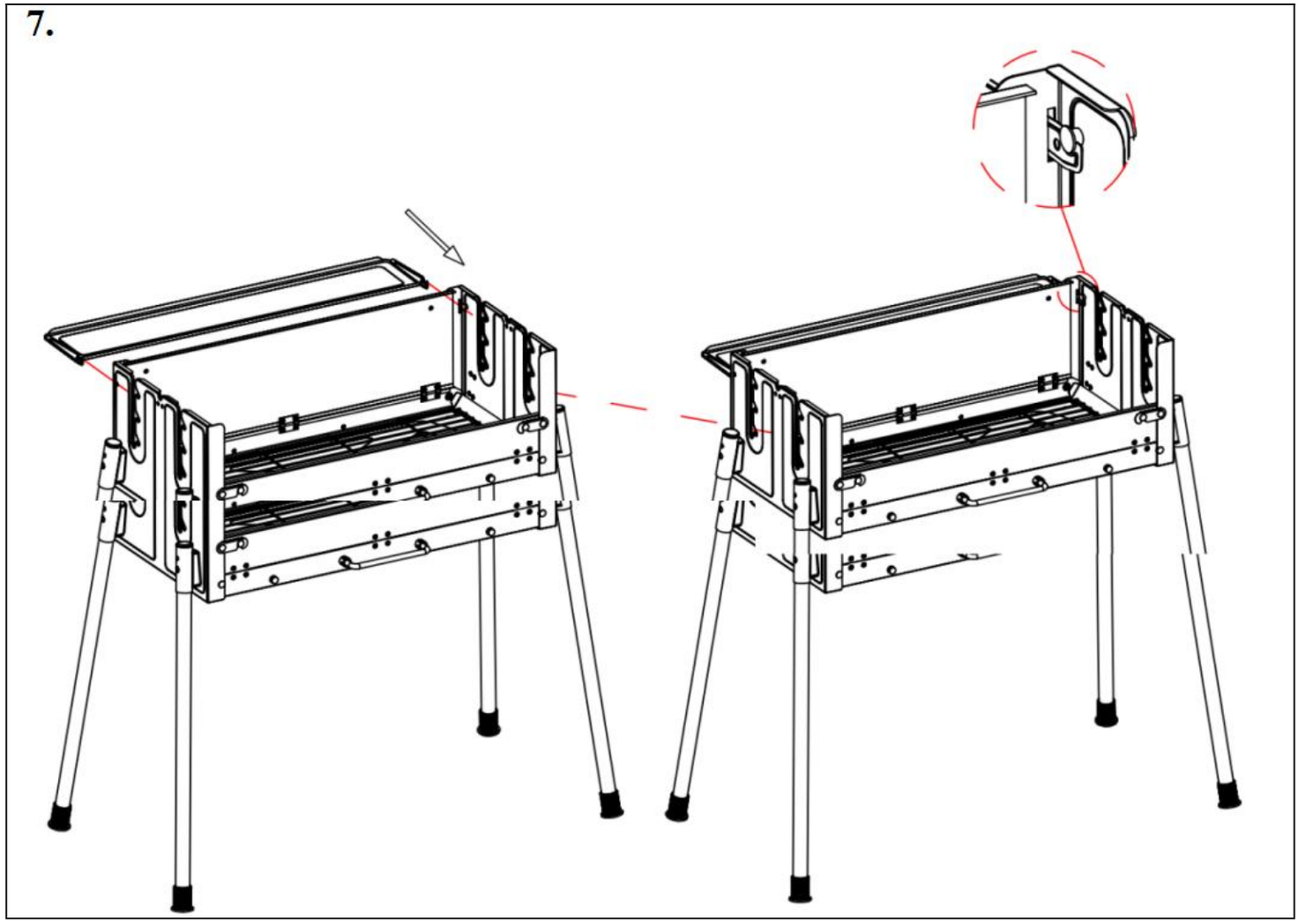

8.

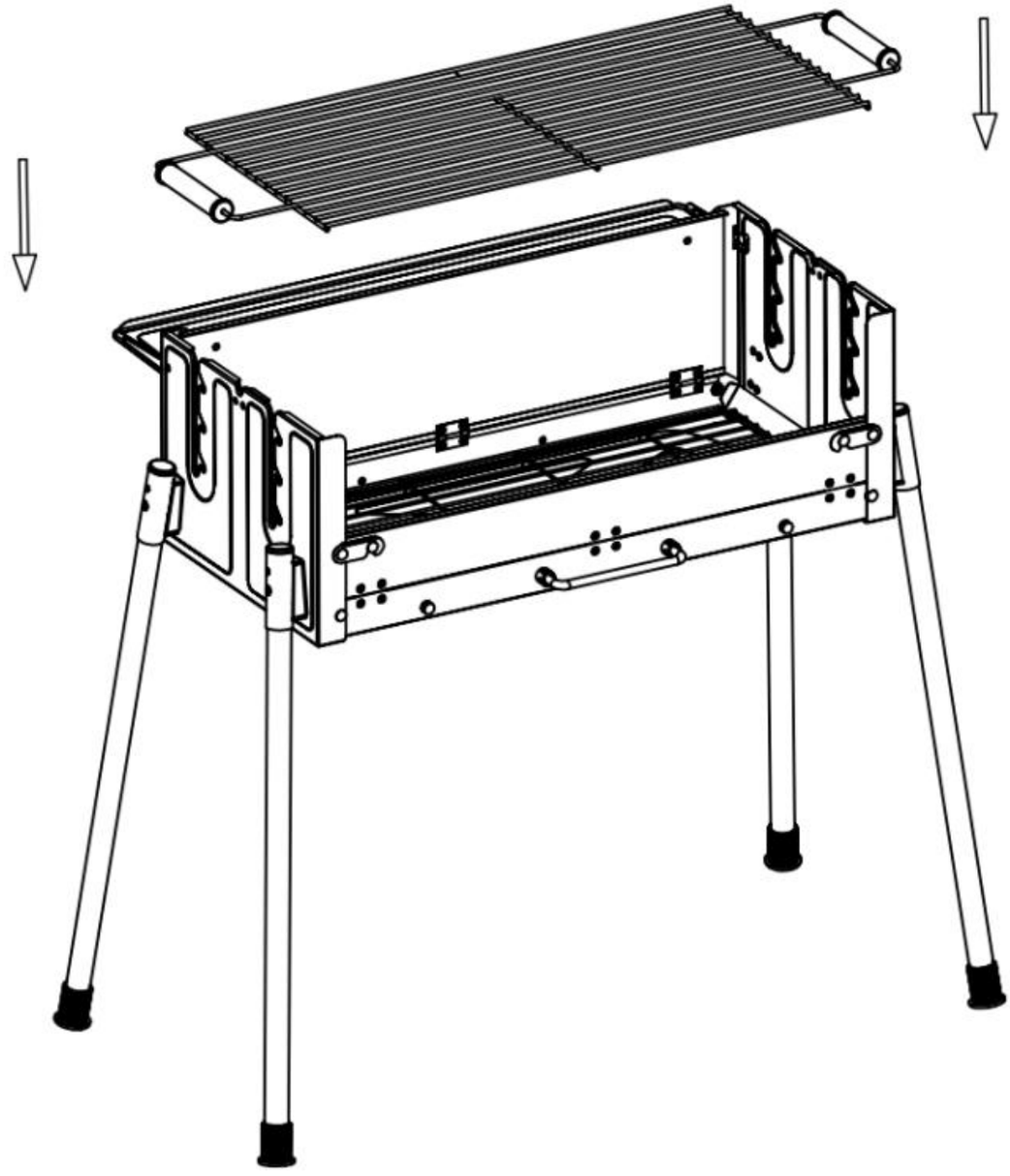

9.

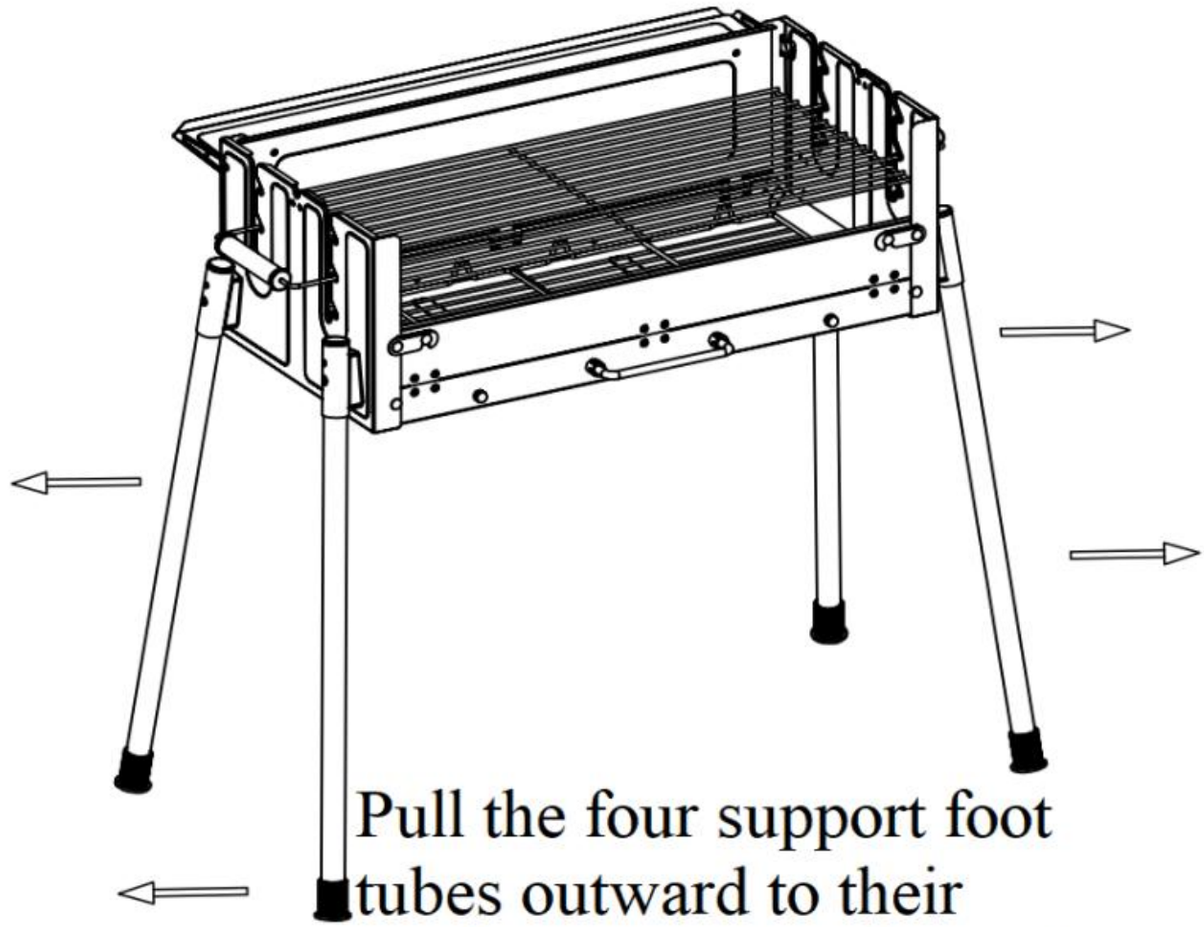

Pull the four support foot tubes outward to their maximum angle when using.

10.

