Emma
Pendant

4811

Project Name _____

Fixture Type _____

Quantity _____

Norwell | Lighting

ILEX

Custom Metalcraft

4811

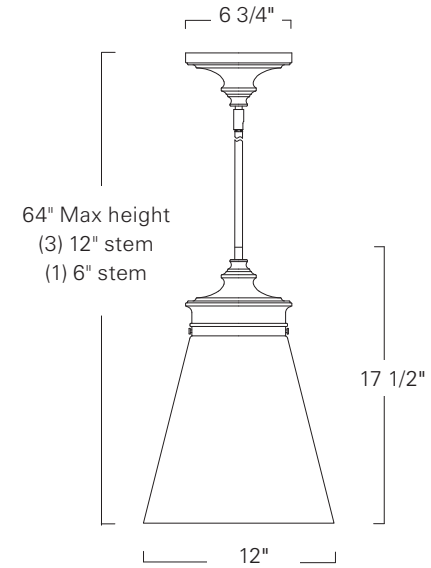



4811-AN-CL



4811-PN-CL



4801

Product Name / Model / Dimensions	Finish Options	Diffuser	Lamping Options
Emma Pendant 4811 4811 — Body Height: 64" — Width: 12" — Overall Height: 65" Max Product ships with (3) 12" stems and (1) 6" stem Canopy 6 3/4" diameter	**Standard** Antique Brass / **AN** Polished Nickel / **PN**	**Standard** Clear Glass / **CL** Glass Size: 12" H x 12"s W	**Standard** Incandescent 1-60 Watt Medium Base Edison G30 Recommended

Damp Location and Rated UL/ETL Listed

REV-1-2023

DISCLAIMER:
Norwell Lighting and its companies, ILEX Architectural Lighting and Custom Metalcraft reserve the right to change specifications related to its product at anytime. USA Made indicates product is manufactured in East Taunton, Massachusetts facility. Phone: 508-823-1751