INSTALLATION INSTRUCTIONS

suction cup

Non-slip adjusting rubber pad

wrench

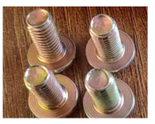

screw

gasket

STEP 1

Place the bottom of the base facing upward and install three foot nails

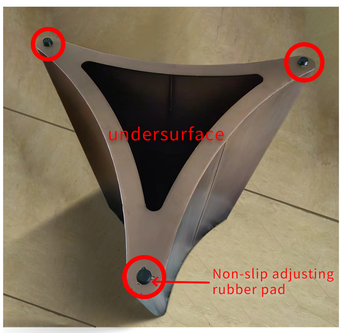

STEP 2

Place the top of the base facing upward

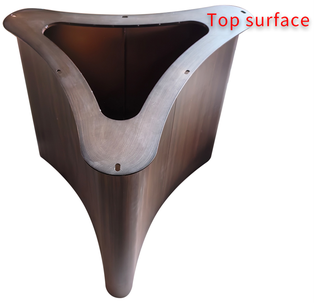

STEP 3

Place the table top on the base,
and secure the base to the table top using three screws

STEP 4

Find the rotating core with the high side of the inner ring facing up

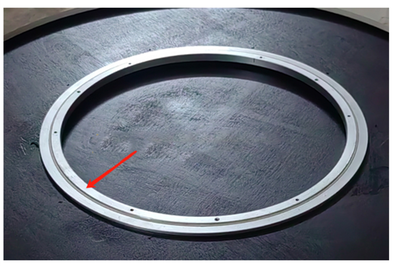

STEP 5

Place the high side of the inner core facing upward in the middle of the table top

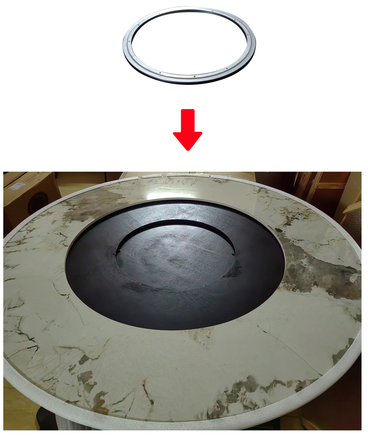

STEP 6

Lift the middle turntable with a suction cup and place it on the table

INSTALLATION COMPLETE

INSTALLATION INSTRUCTIONS

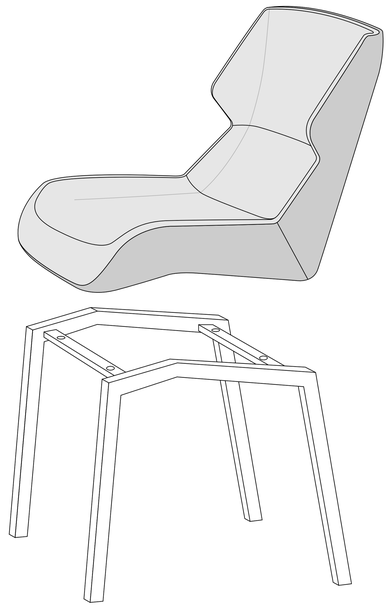

Cushion

Base

Screw x 4

Gasket x 4

Hex key

The extra parts are for spare

Place the cushion upside down, bottom side up, on a clean floor,
Turn the base upside down, align it with the holes at the bottom of the cushion, and secure it using screws

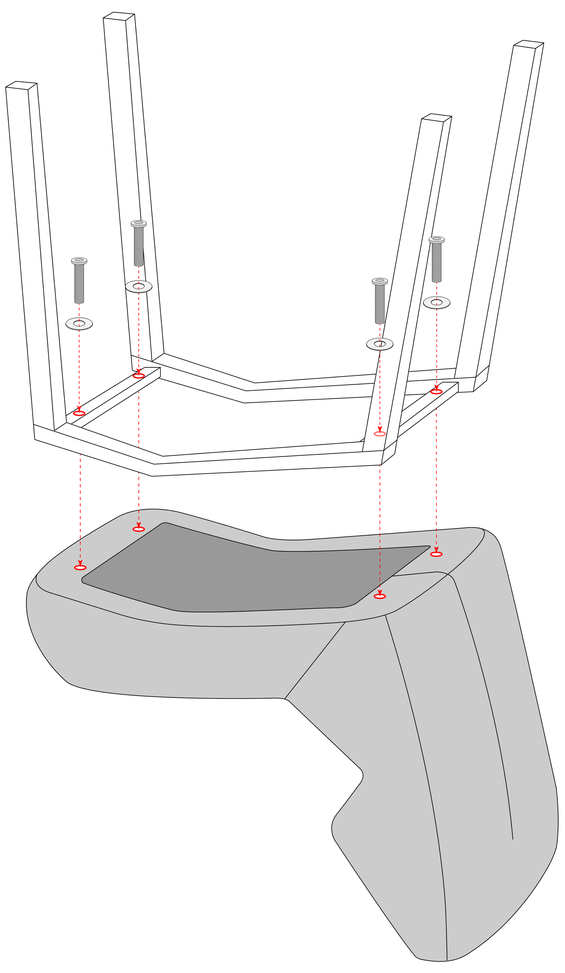
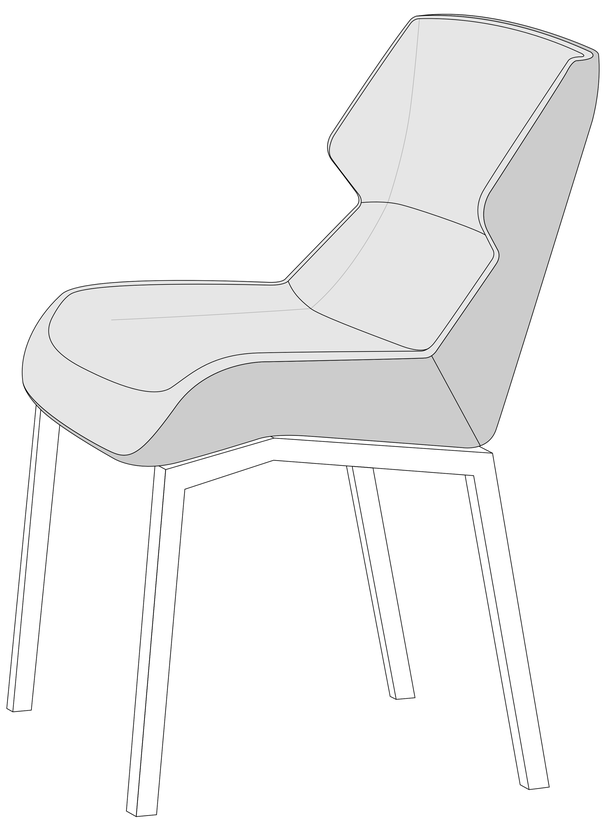
Installation complete