MOD - 6275

Thank you for purchasing the **MODWAY BED!**

Before you start, here are some helpful advice:

1. We suggest you spend a short time reading through this leaflet and then follow the simple step instructions.

2. Owing to the size and weight of the bed, we recommend that it is assembled by two adults, on a carpeted or padded area, in the room that it is intended for. Approximate assembly time: 35 minutes.

3. Please do not use any tools other than those provided or recommended in these instructions.

4. Please do not throw away any of the packaging or the instruction until you have checked all the components and hardware and the furniture is fully assembled. Please ensure that the packaging is disposed of in a safe environmentally friendly way.

5. Assemble all components loosely until advised to tighten. Depending on use, it may be necessary to tighten the components from time to time, so please save tools that have been provided.

6. Please keep all fitting out of reach of children.

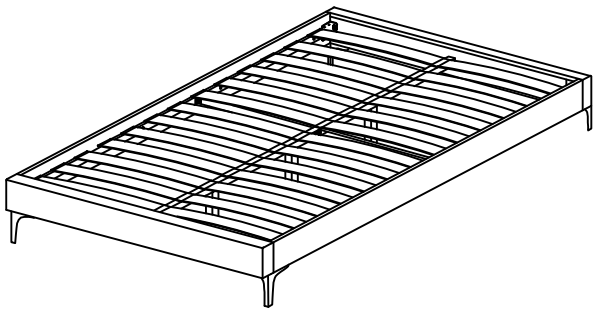

Hardware:

1		WOOD SCREW M4 x 20mm	2 PCS
2		WOOD SCREW M4 x 25mm	12 PCS
3		WOOD SCREW M3.5 x 16mm	8 PCS
4		JCBB BOLT M8 x 30mm	4 PCS
5		M8 FLAT WASHER	4 PCS
6		M8 SPRING WASHER	4 PCS
7		BED SLAT SIDE FITTER	26 PCS
8		BED SLAT CENTER FITTER	13 PCS
9		M5 ALLEN KEY (BALL SHAPE)	1 PC

Component:

A.	HEADBOARD	x 1
B.	FOOTBOARD	x 1
C.	SIDE RAIL (L/R)	x 2
D.	CENTER RAIL	x 1
E.	CENTER SUPPORT LEG	x 3
F.	CENTER SUPPORT	x 2
G.	BED SLAT	x 26
H.	BED LEG	x 4

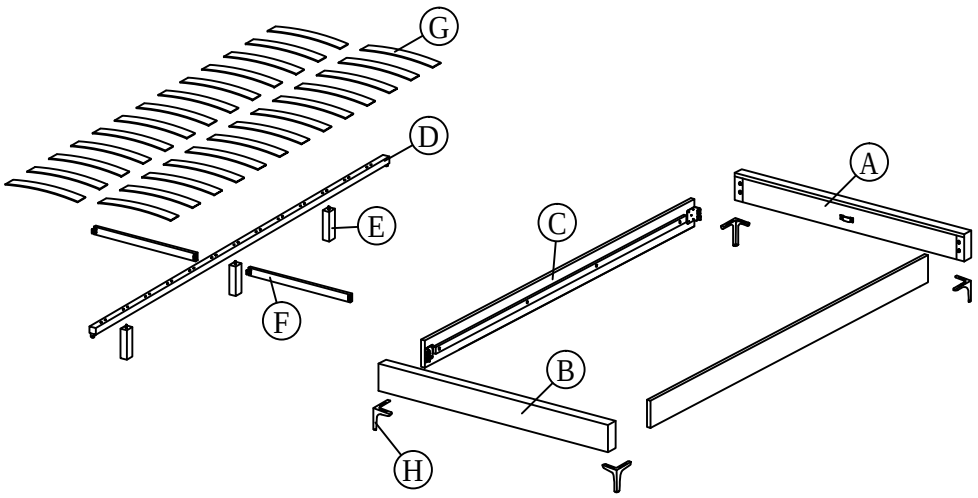

MOD - 6275

STEP 1

1.1 Insert and secure the **Bed Leg (H)** to the **Headboard (A)** and **Footboard (B)** using hardware parts **WOOD SCREW (2)**, **BOLT (4)**, **FLAT WASHER (5)**, **SPRING WASHER (6)** and **ALLEN KEY. (9)**.

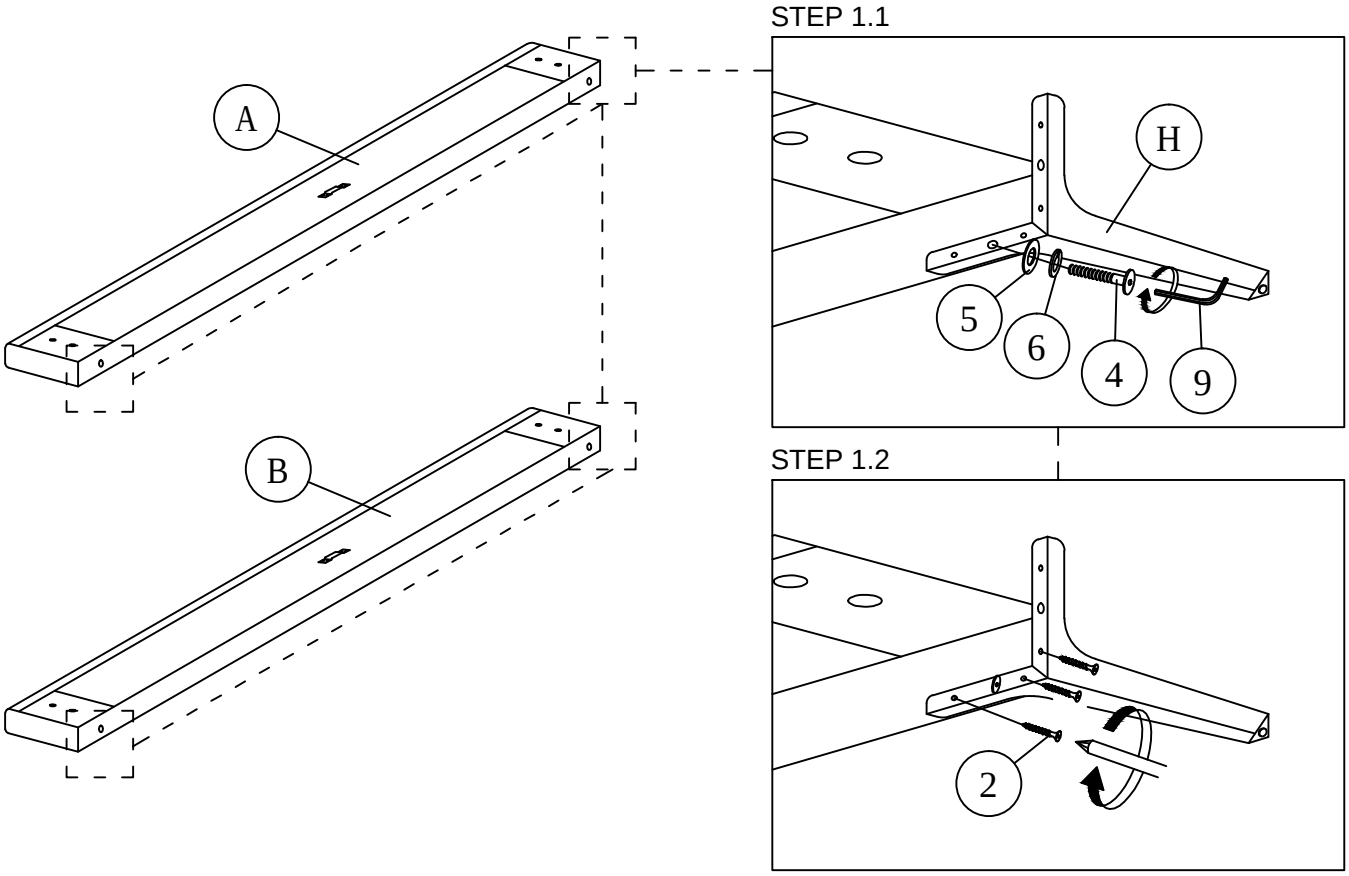

2. WOOD SCREW M4 x 25mm x 12pcs	Screw Driver	4. JCBB BOLT M8 x 30mm x 4pcs	5. M8 FLAT WASHER x 4pcs
6. M8 SPRING WASHER x 4pcs		9. M5 ALLEN KEY (BALL SHAPE) x 1pcs	

STEP 2

2.1 Fasten **Center Support Leg (E)** to **Center Rail (D)** attach by screwing the protruding nut into the corresponding holes.

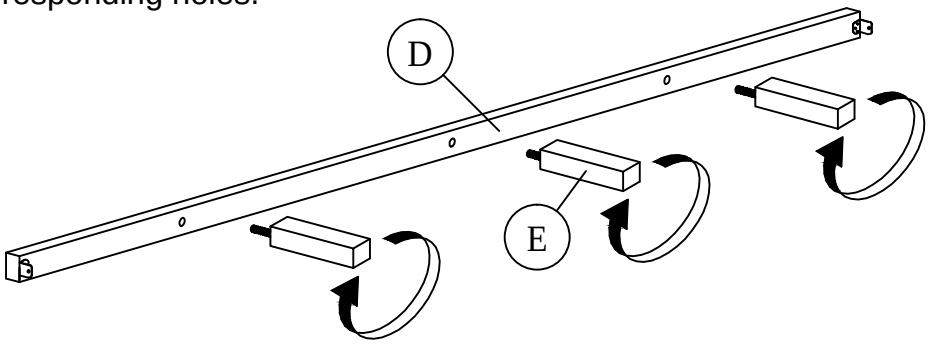

STEP 3

3.1 Loosen the pre-inserted bolt on the **Headboard (A)** & **Footboard (B)** using hardware part **ALLEN KEY (9)**.

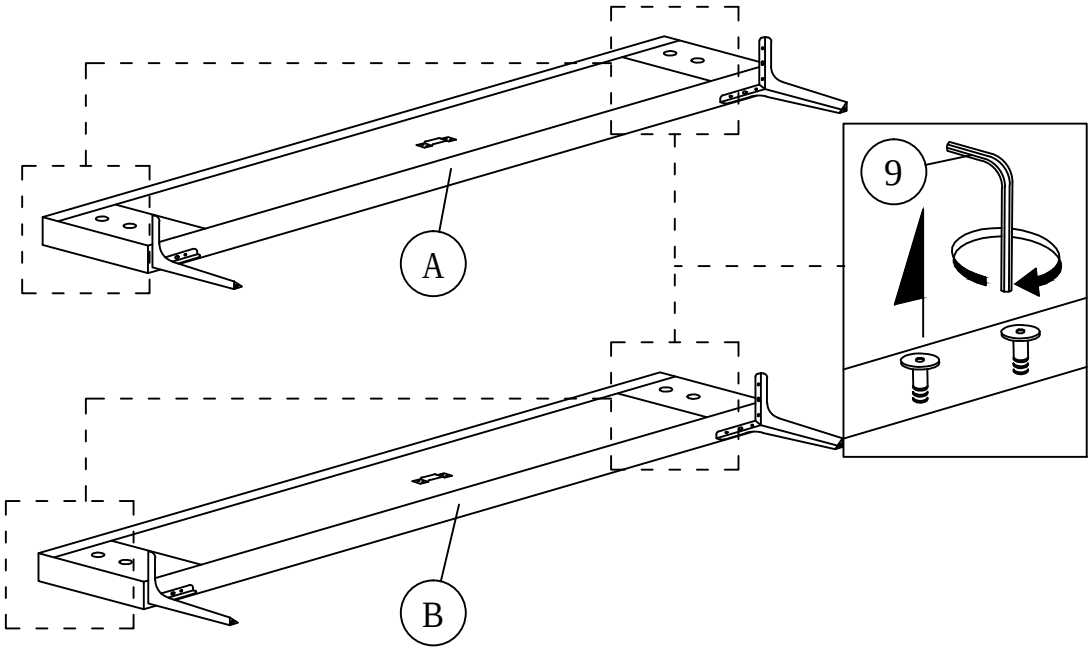

9. M5 ALLEN KEY (BALL SHAPE) x 1pcs

STEP 4

4.1 Attach the **Side Rails (C)** to the **Headboard (A)** & **Footboard (B)** using hardware part **ALLEN KEY (9)**.

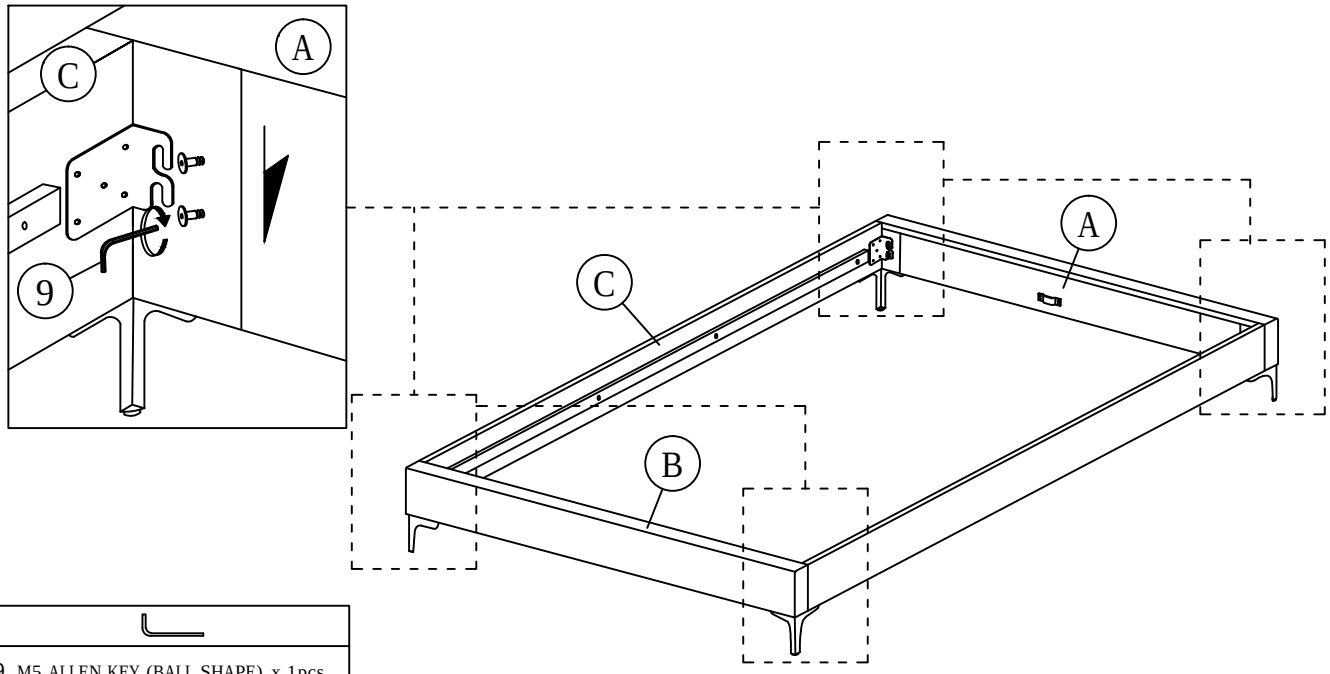

9. M5 ALLEN KEY (BALL SHAPE) x 1pcs

MOD - 6275

STEP 5

5.1 Locate **Center Rail (D)** into the corresponding brackets inside of **Headboard (A)** and **Footboard (B)**.

5.2 Insert and secure the **Center Support (F)** to the **Center Rail (D)** & **Side Rail (C)** using hardware parts **WOOD SCREW (3)**.

STEP 5.1

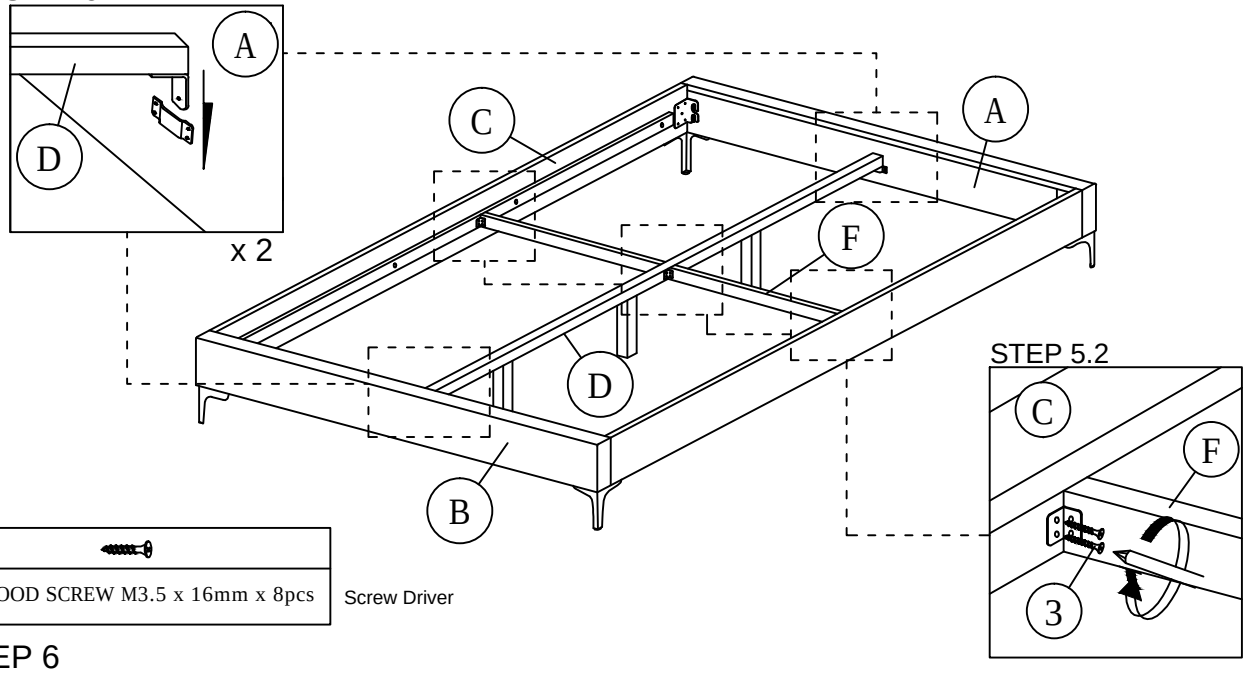

STEP 5.2

3. WOOD SCREW M3.5 x 16mm x 8pcs	Screw Driver

STEP 6

6.1 Locate **Center Rail (D)** into the corresponding brackets inside of **Headboard (A)** and **footboard (B)** using hardware parts **WOOD SREW (1)** .

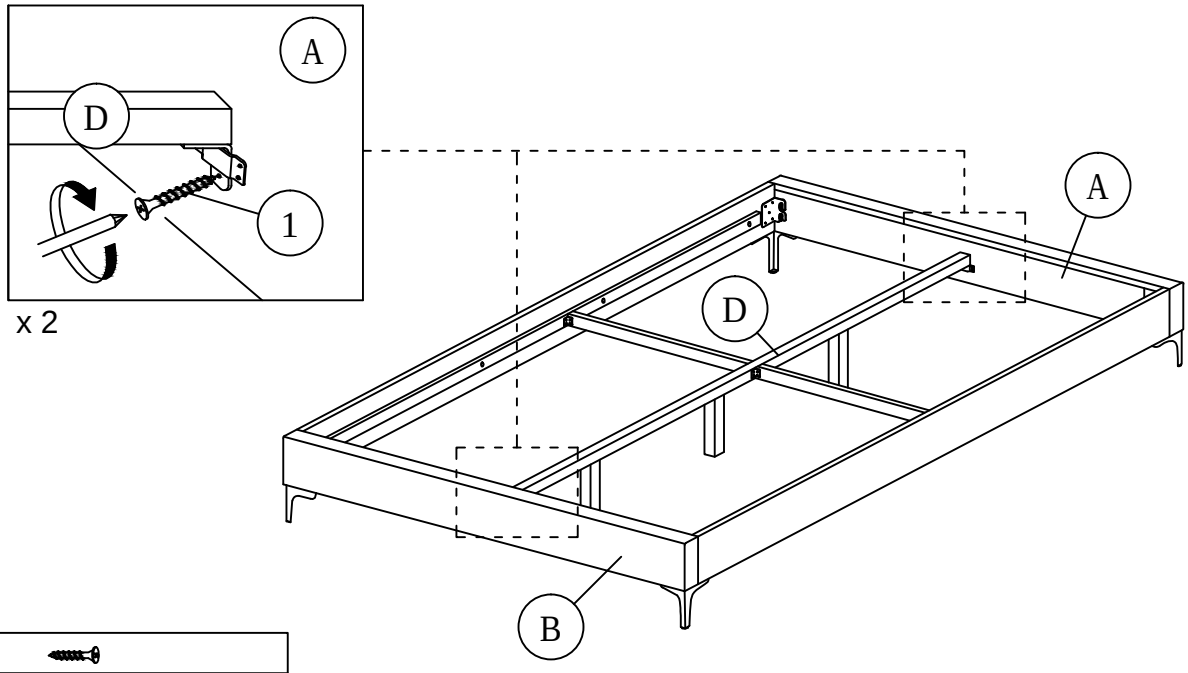

1. WOOD SCREW M4 x 20mm x 2pcs	Screw Driver

MOD - 6275

STEP 7

7.1 Insert the **Slats (G)** into the end **SLAT CAP (7)** & **(8)** and fix it to the corresponding holes on the **Side Rail (C) .**

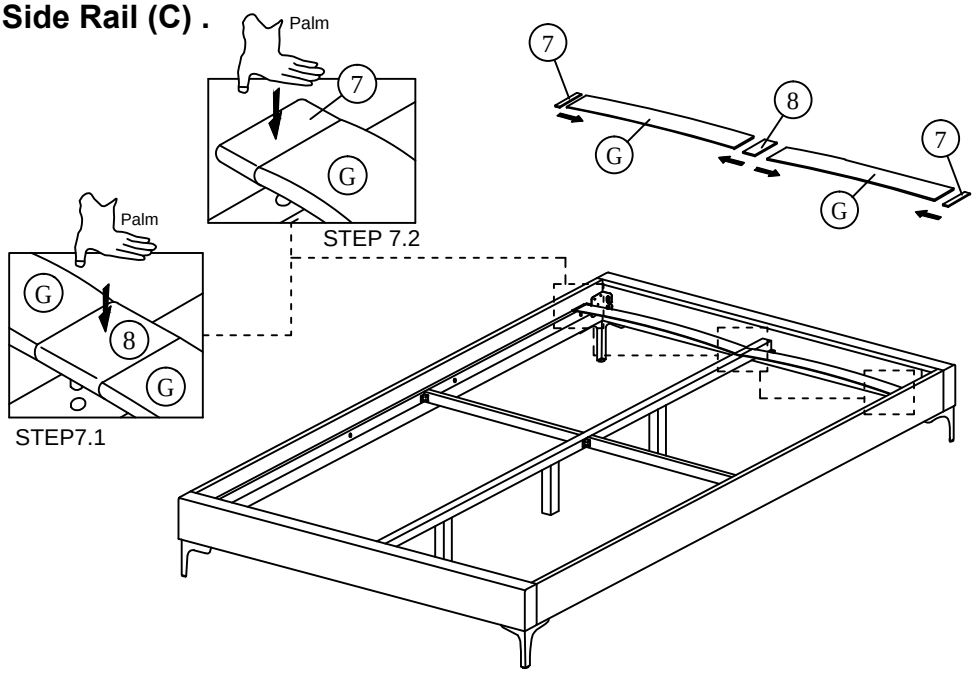

7. BED SLAT SIDE FITTER x 26pcs	8. BED SLAT CENTER FITTER x 13pcs

STEP 8

8.1 Carefully position the assembled bed to the desired location by four adults.

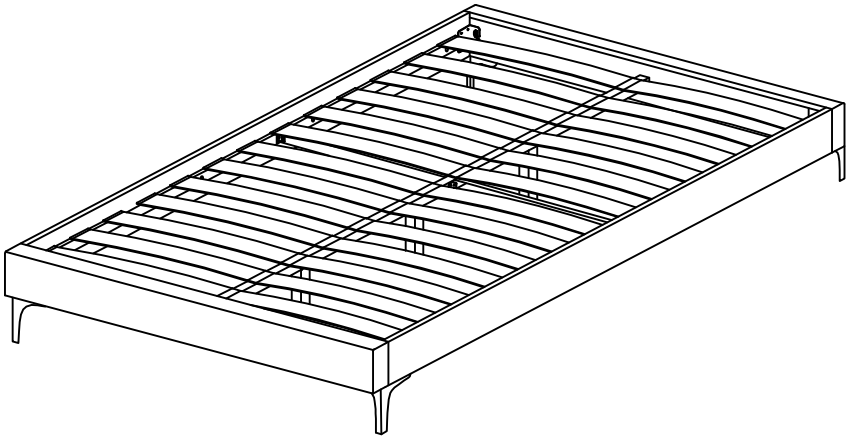

Assembly is complete. The bed is ready to use now!

NOTE: Hardware may loosen over time. Periodically check that all connections are tight.