Product Installation Instructions

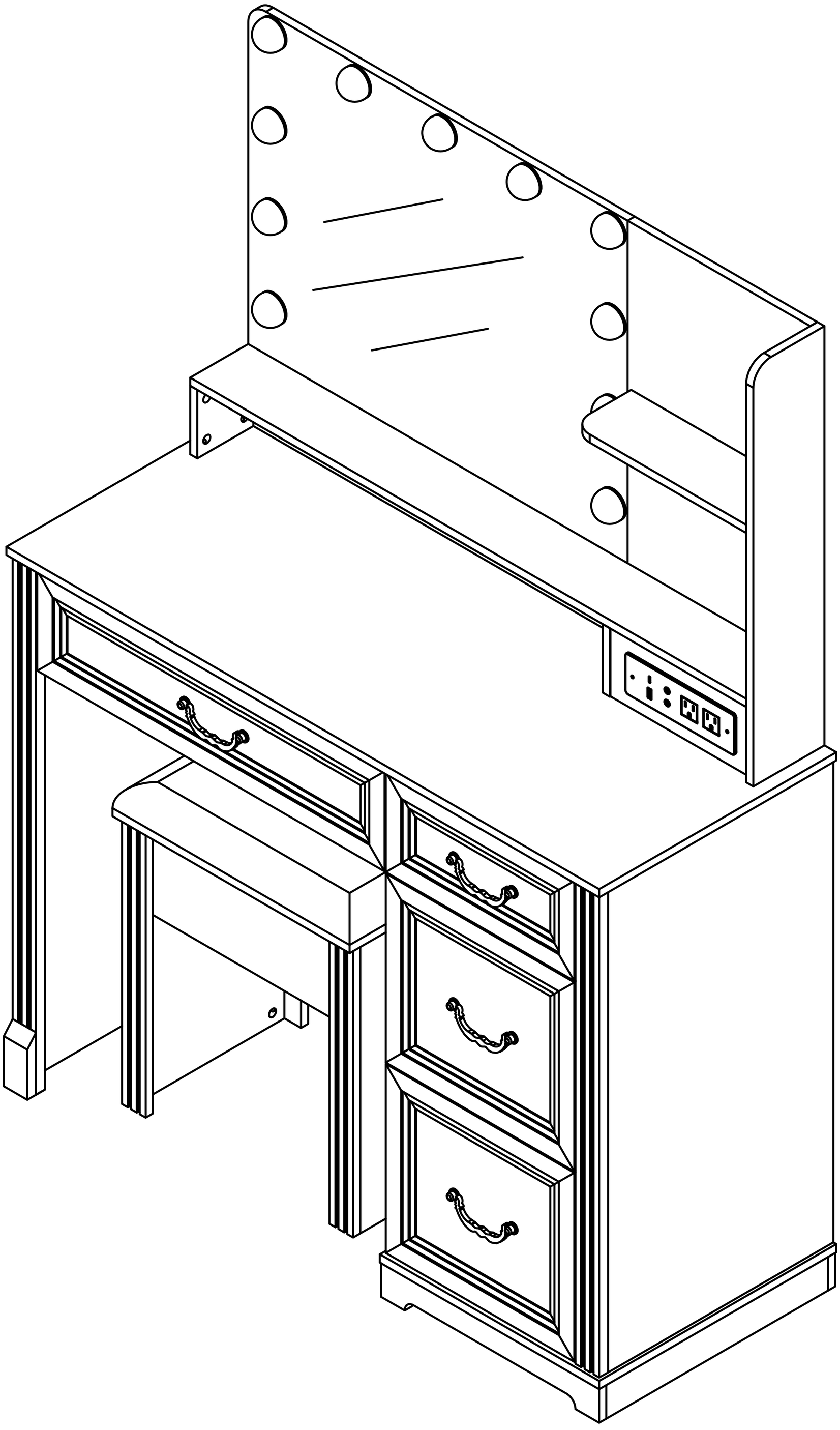

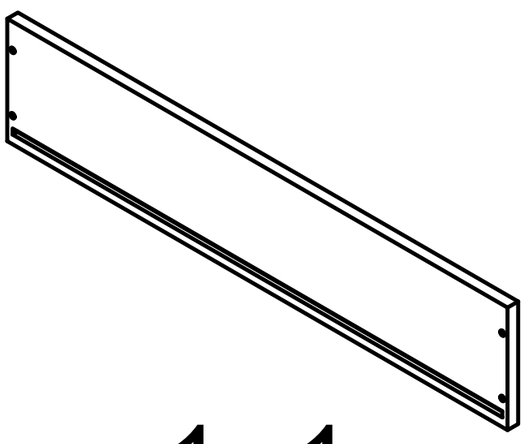

1x1

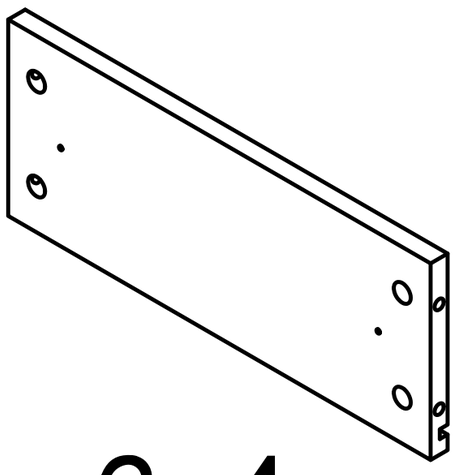

2x4

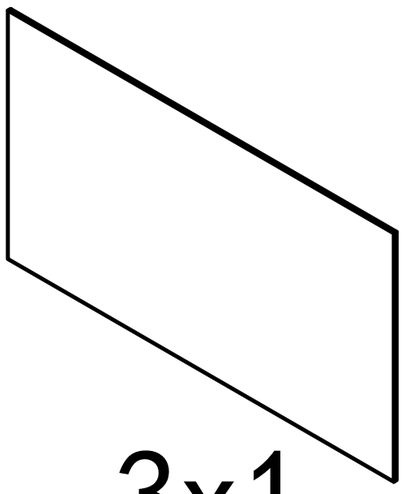

3x1

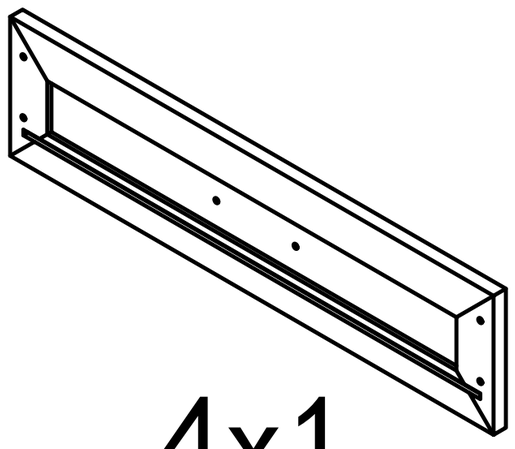

4x1

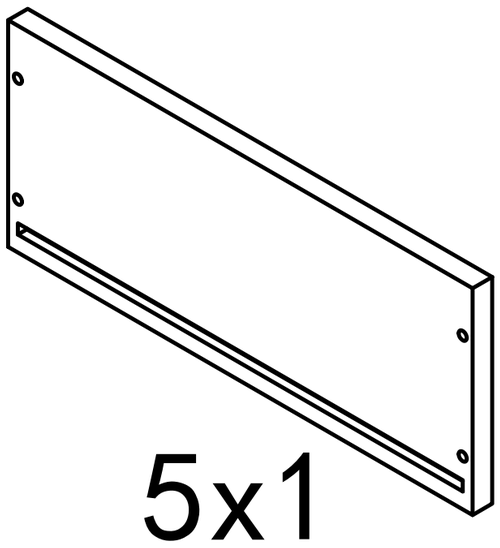

5x1

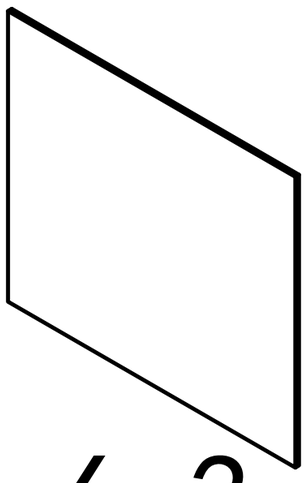

6x3

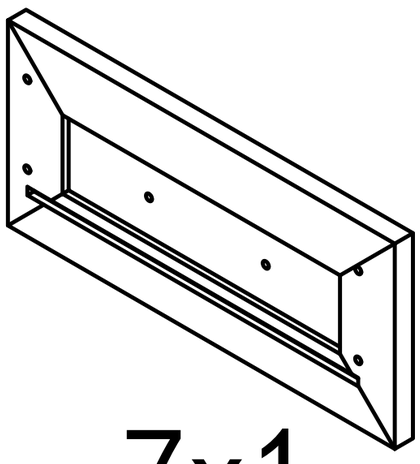

7x1

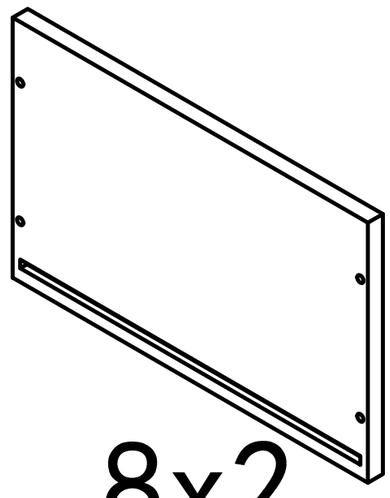

8x2

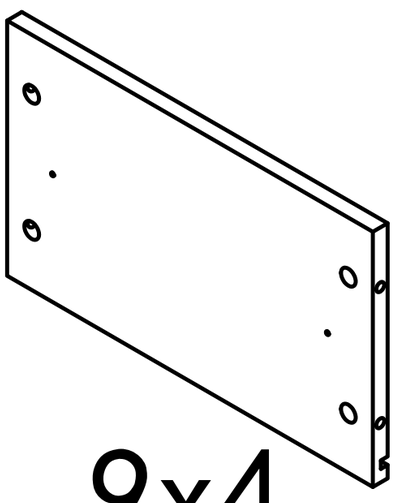

9x4

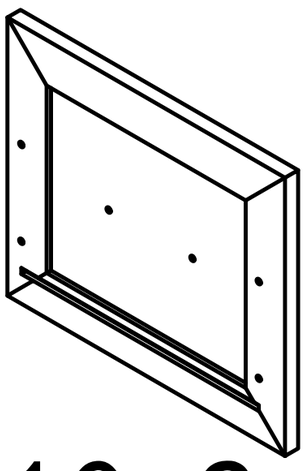

10x2

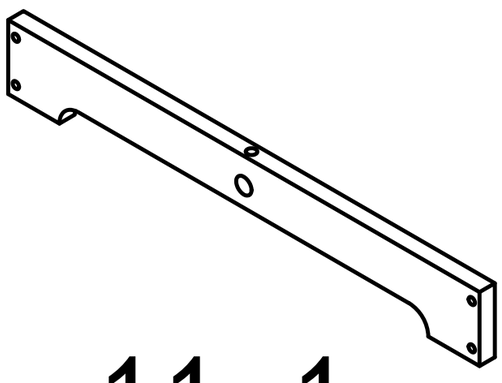

11x1

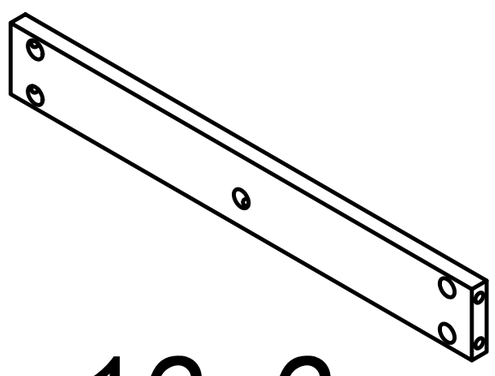

12x2

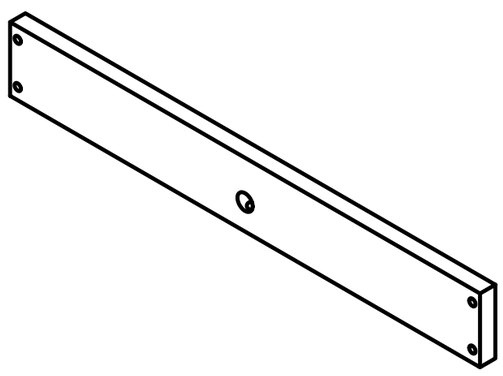

13x1

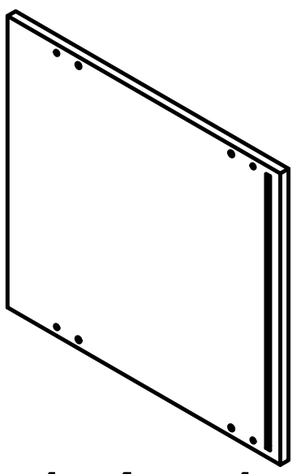

14x1

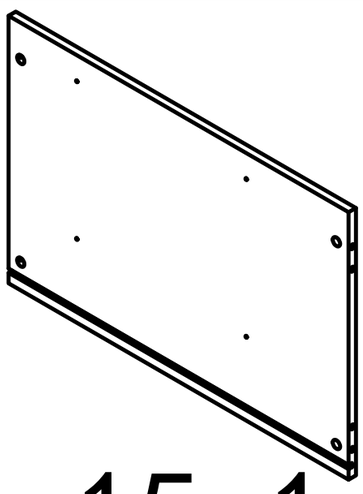

15x1

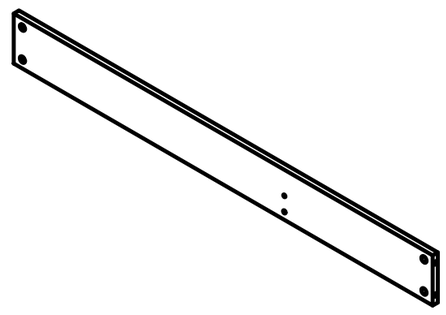

16x1

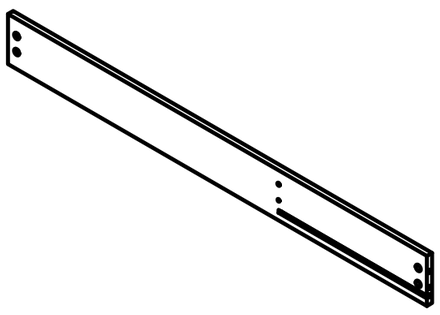

17x1

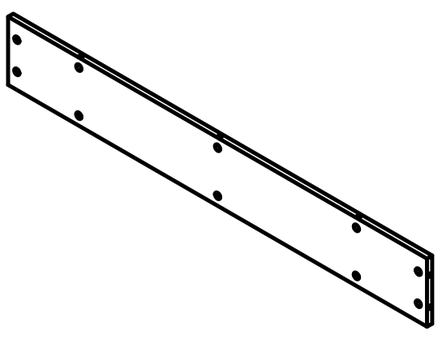

18x1

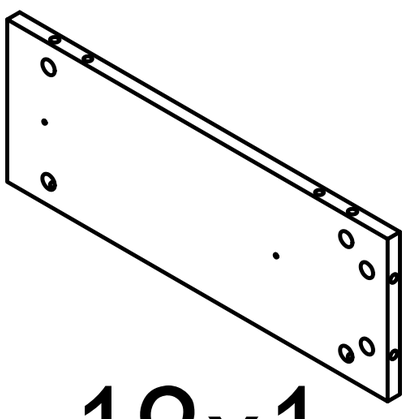

19x1

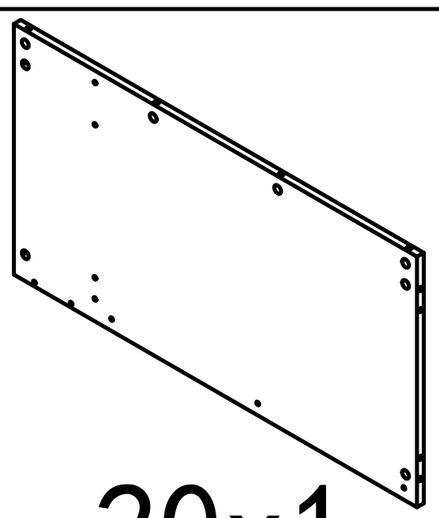

20x1

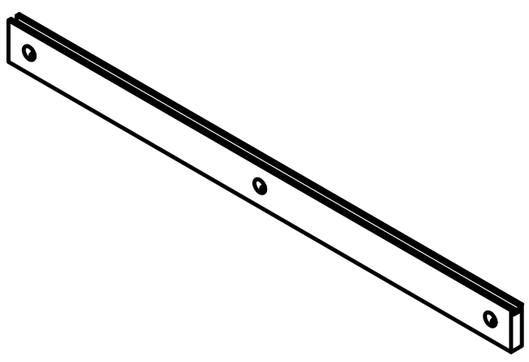

21x1

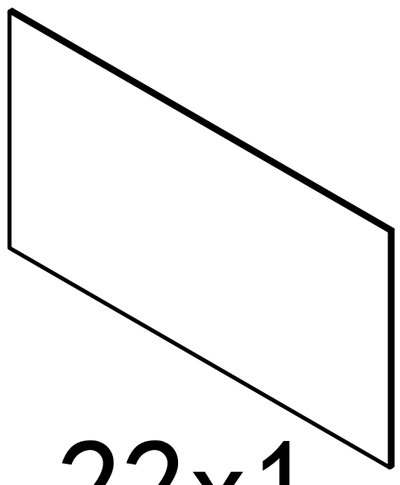

22x1

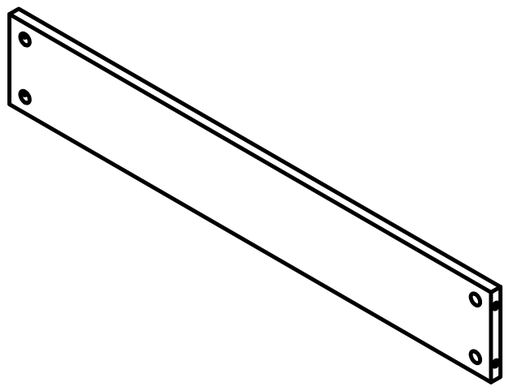

23x1

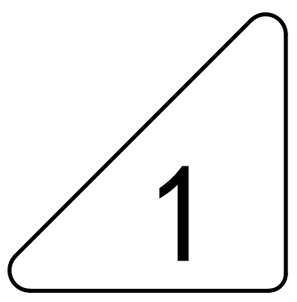

1

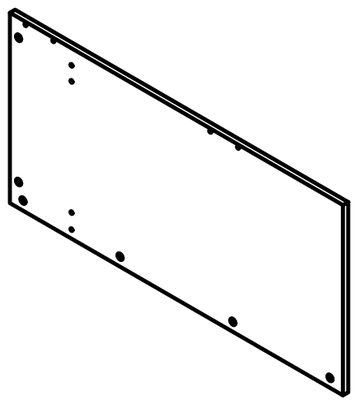

24x1

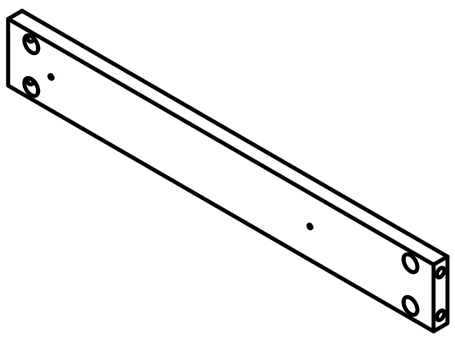

25x2

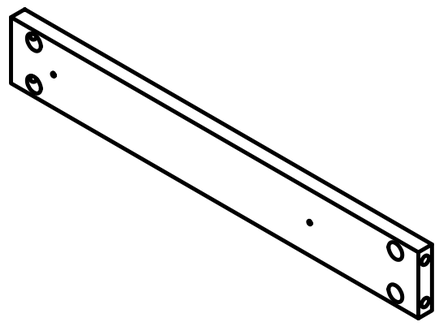

26x2

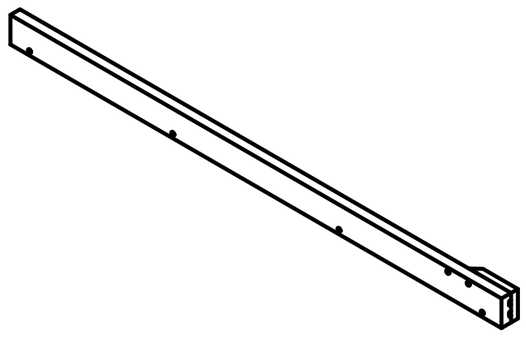

27x1

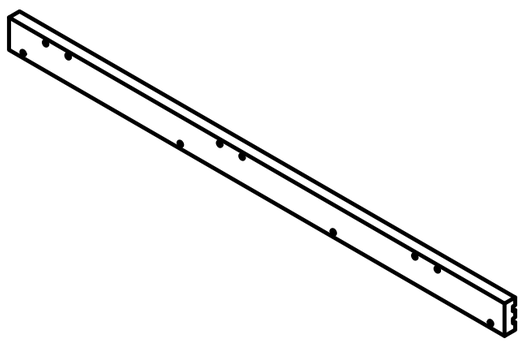

28x1

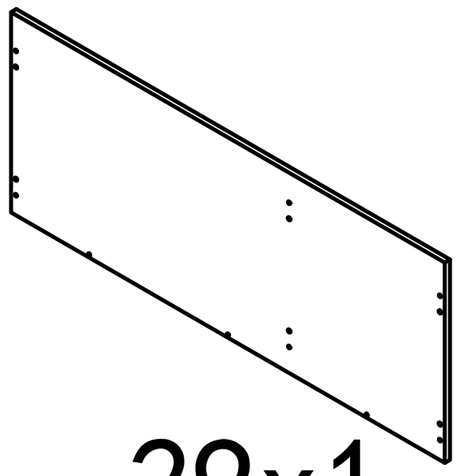

29x1

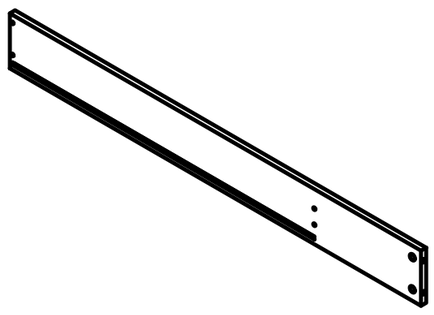

30x1

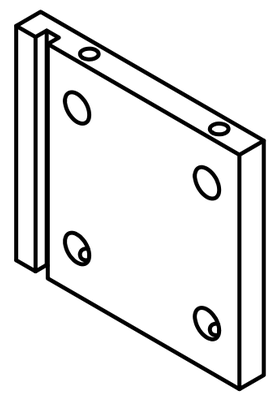

31x1

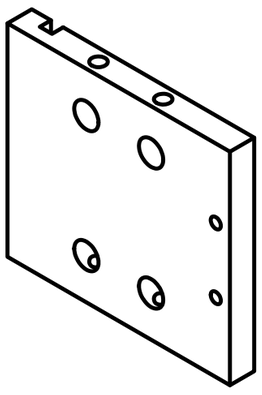

32x1

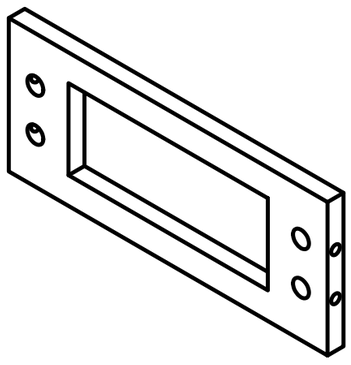

33x1

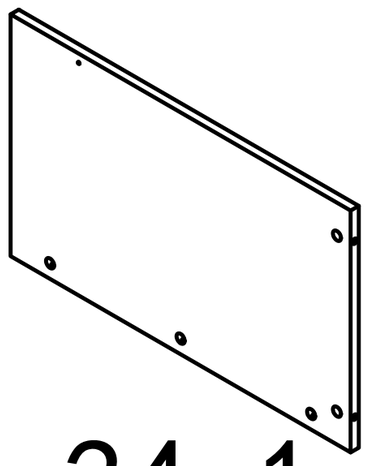

34x1

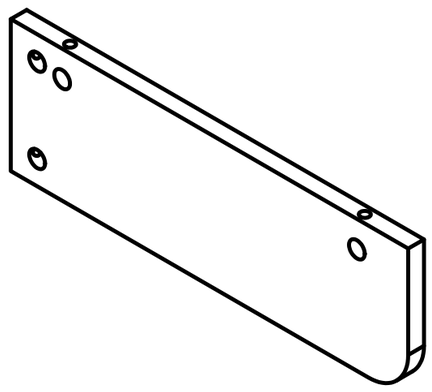

35x1

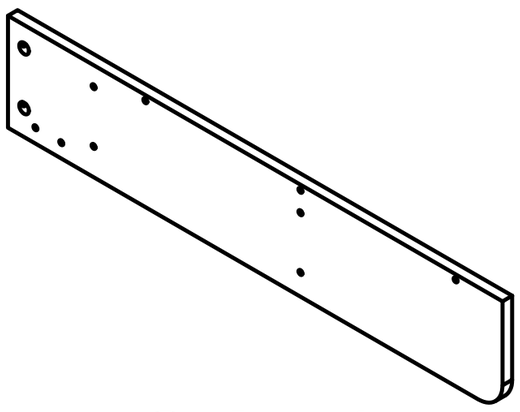

36x1

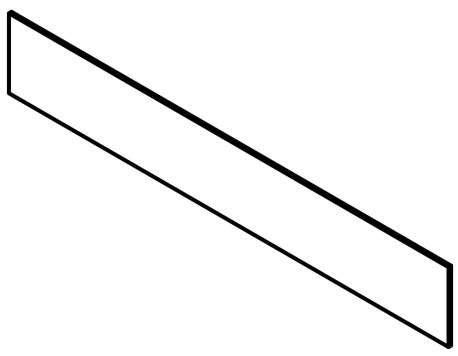

37x1

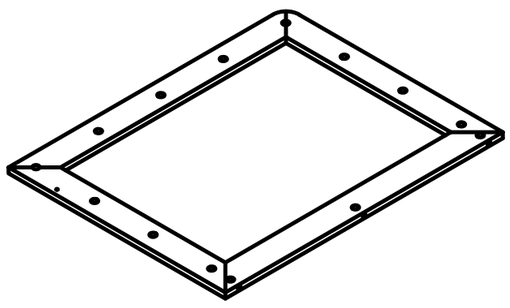

38x1

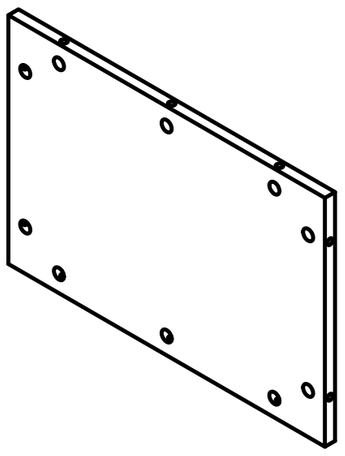

39x1

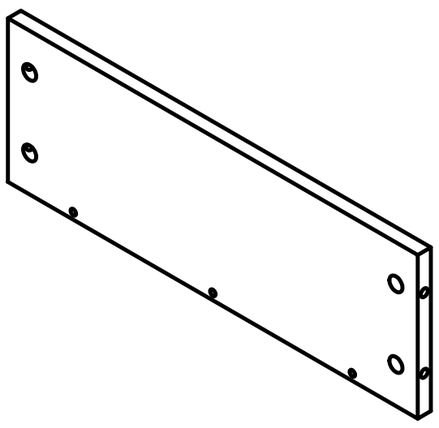

40x2

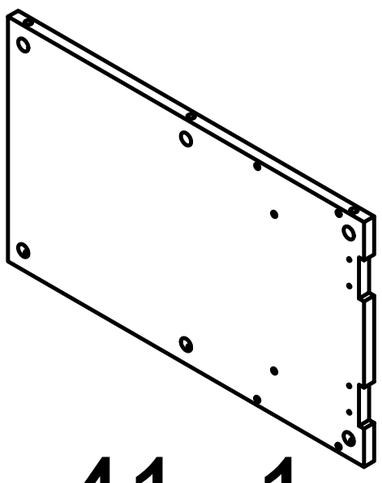

41x1

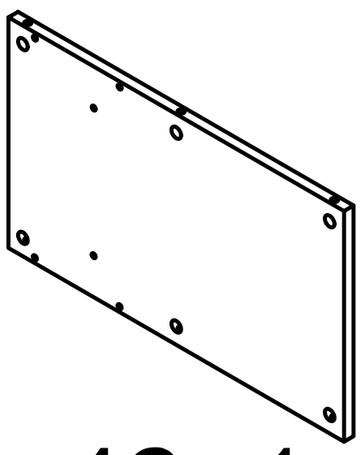

42x1

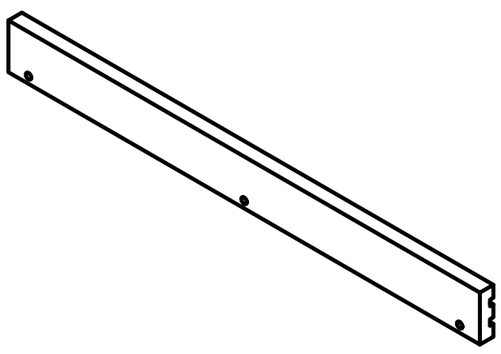

43x4

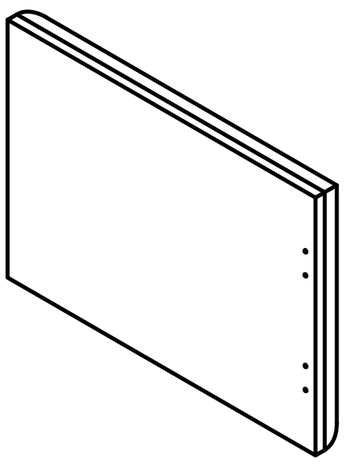

44x1

2

Accessories list

Ⓐ	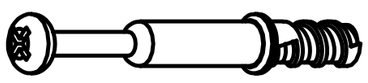	Two In One Screw (6x28mm)	165pcs +6pcs
Ⓑ		Two In One Nut (10x12mm)	165pcs +6pcs
Ⓒ	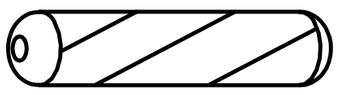	Wood Chipping (6x30mm)	14pcs +2pcs
Ⓓ	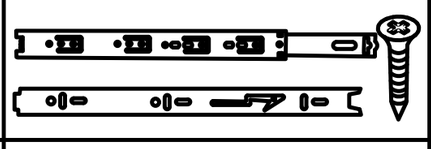	Screw & Guide(29cm) (3x12mm)	8pcs / 48pcs +2pcs
Ⓔ		Handle & Screw (4x8mm)	4pcs / 8pcs +2pcs
Ⓕ	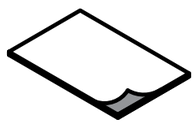	Non-slip pads	10pcs +2pcs
Ⓖ	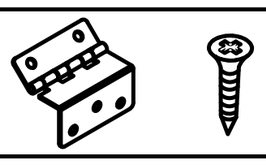	Hinge & Screw (3x12mm)	2pcs / 8pcs +2pcs
Ⓗ	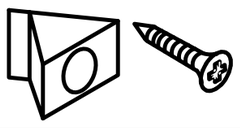	Fixing clip & screw (3x16mm)	4pcs +2pcs
Ⓘ	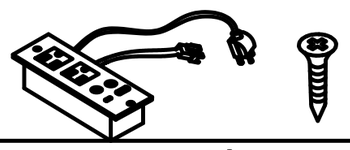	Power Socket & Screw (3x10mm)	1pcs / 2pcs +1pcs
Ⓙ	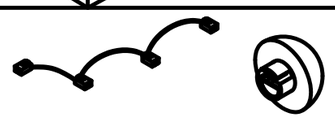	Lamp	11pcs / 1pcs
Ⓚ		Iron Sheet & Screw (3x10mm)	1pcs / 2pcs +1pcs
Ⓛ	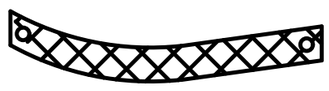	Anti-tipping tape	1pcs
Ⓜ		Screw (3.5x12mm) Gasket	1pcs +1pcs
Ⓝ		Wire Clamp	1pcs +1pcs
Ⓞ		Countersunk head tapping Screw (4x45mm)	1pcs

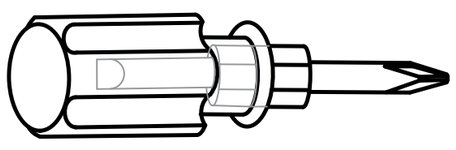

1pcs

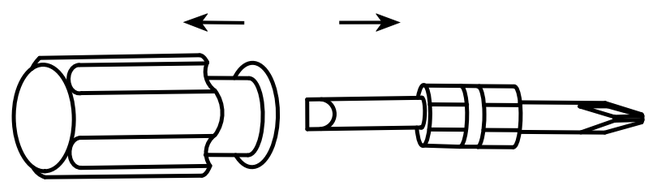

Double-head screwdriver, use as required

Product Explosion diagram

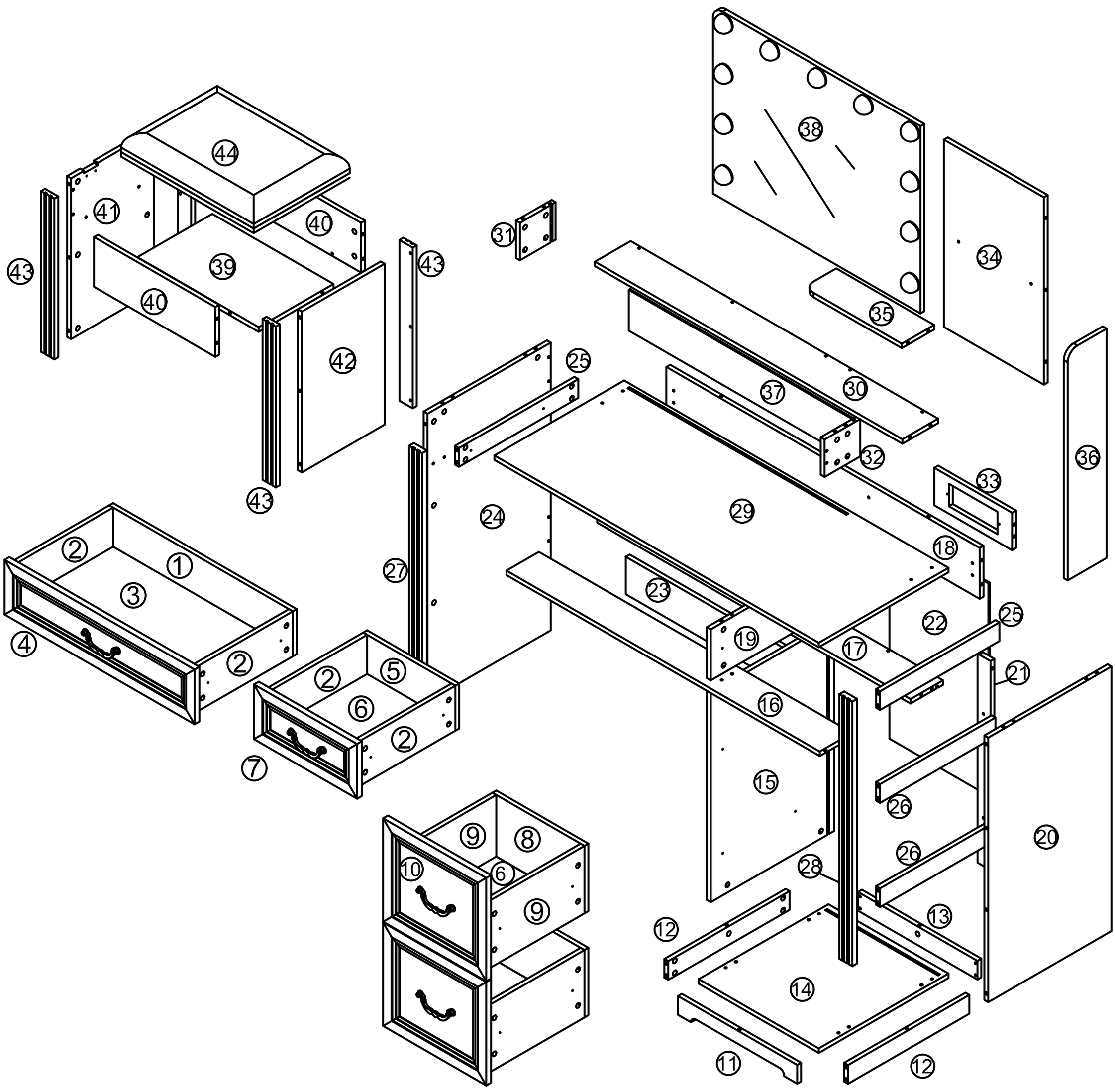

A	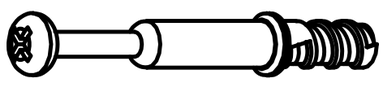	8pcs	B		8pcs	E			1pcs / 2pcs
D	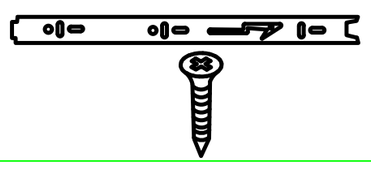	2pcs / 4pcs							

Use parts A and B

Step1

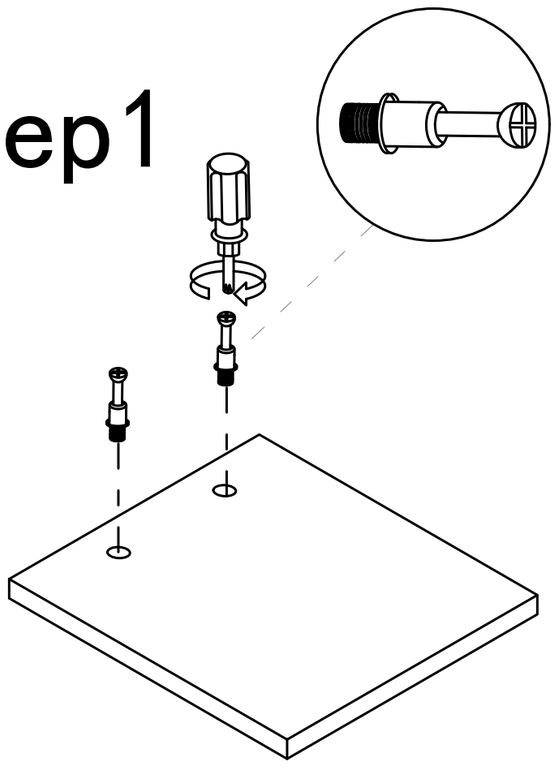

Step2

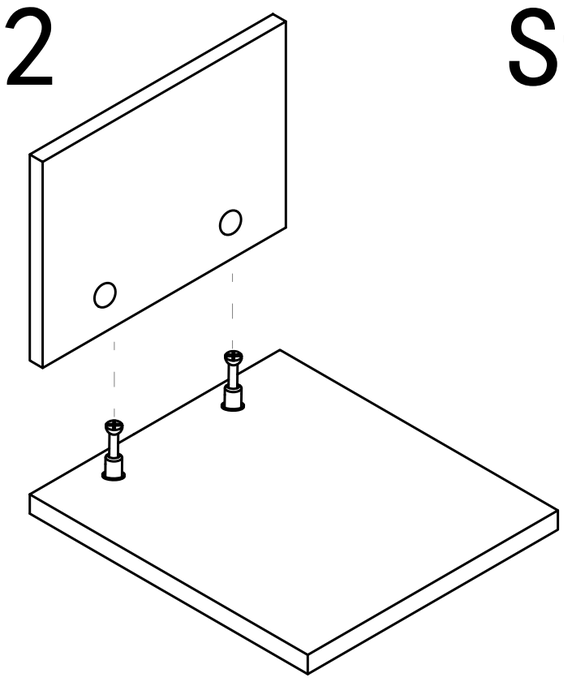

Step3

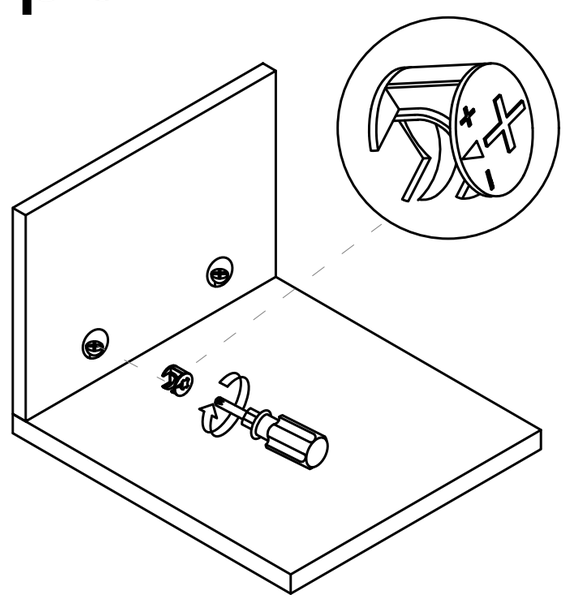

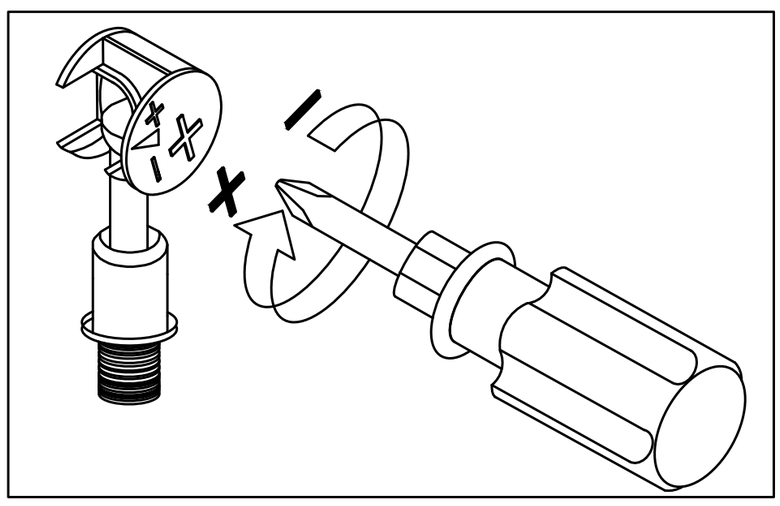

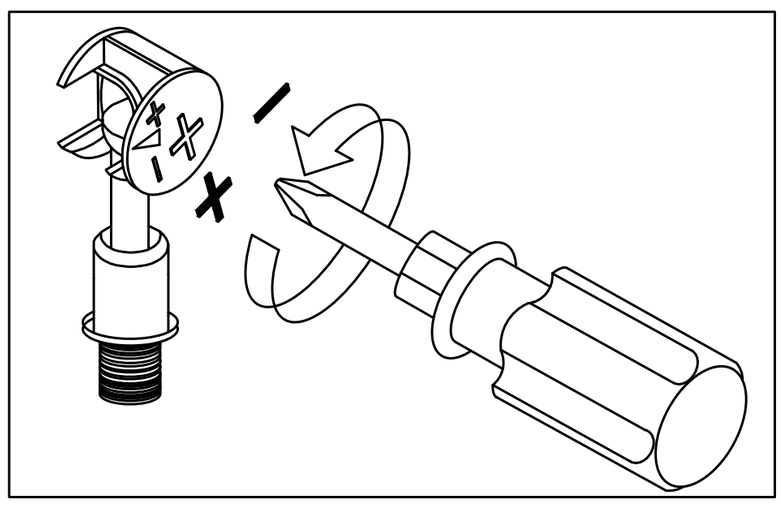

Use a screwdriver to lock in the direction of the "+" sign

Disassemble along the direction of "-" sign

Step 1

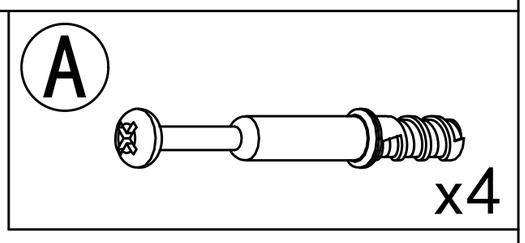

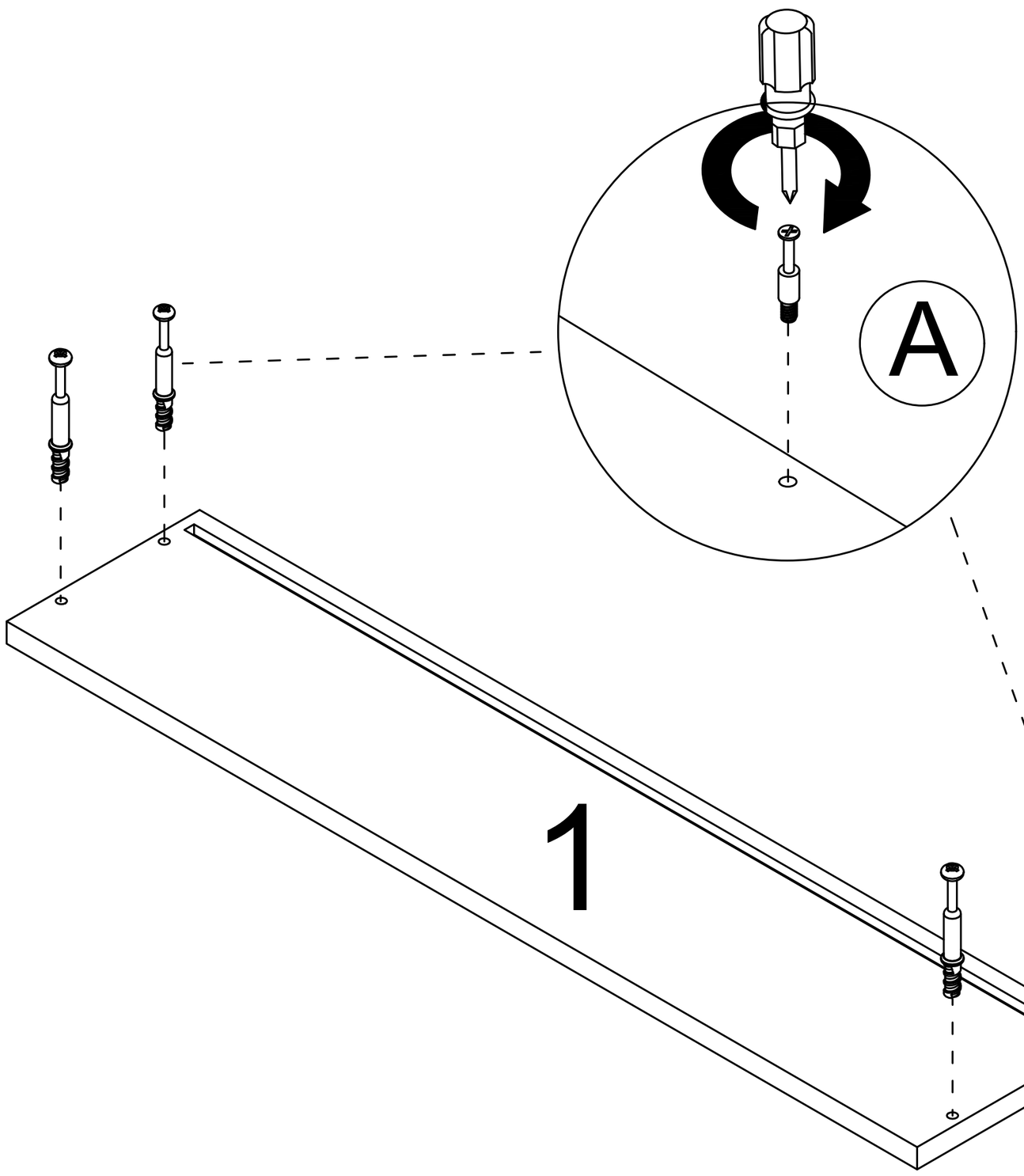

Step 2

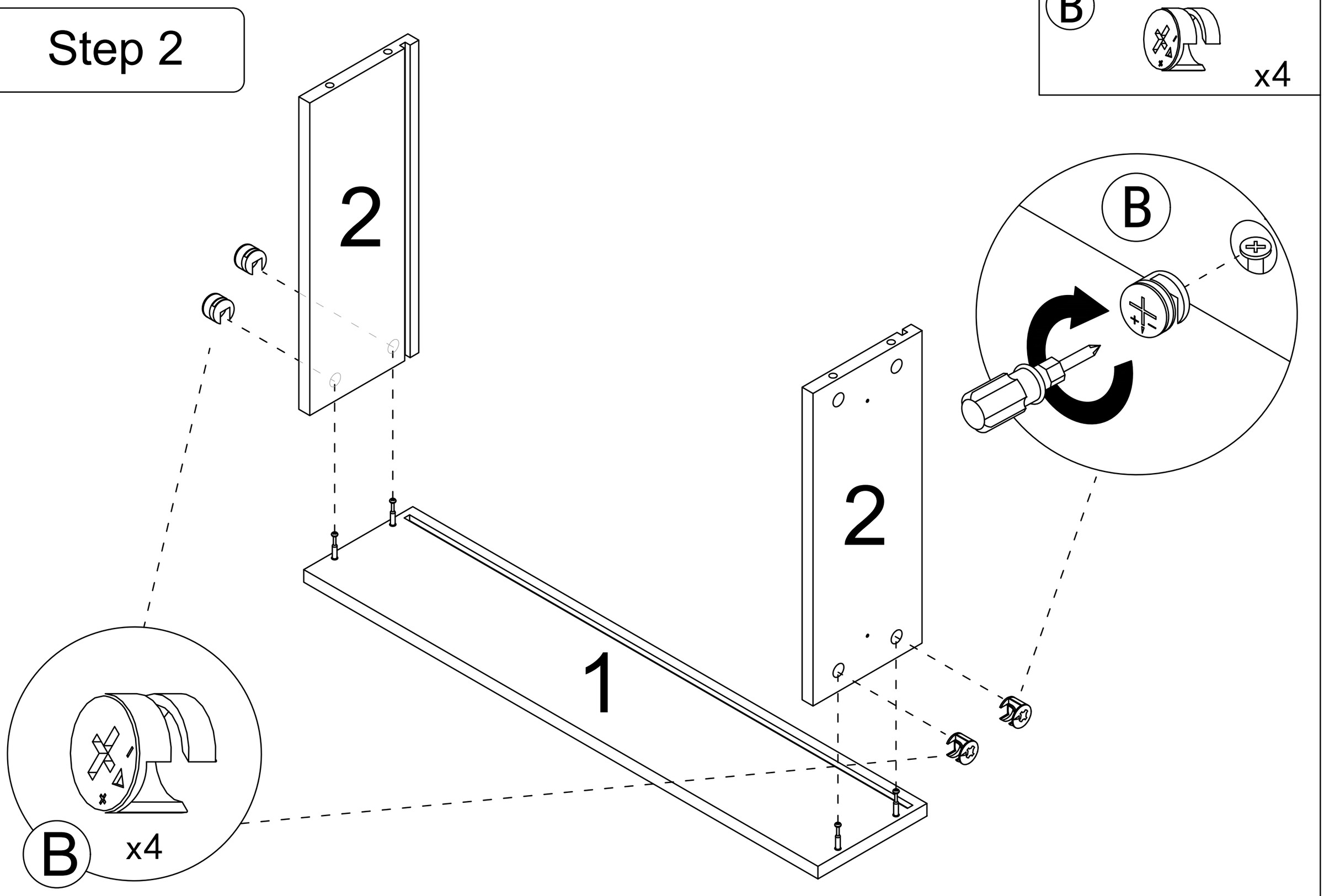

Step 3

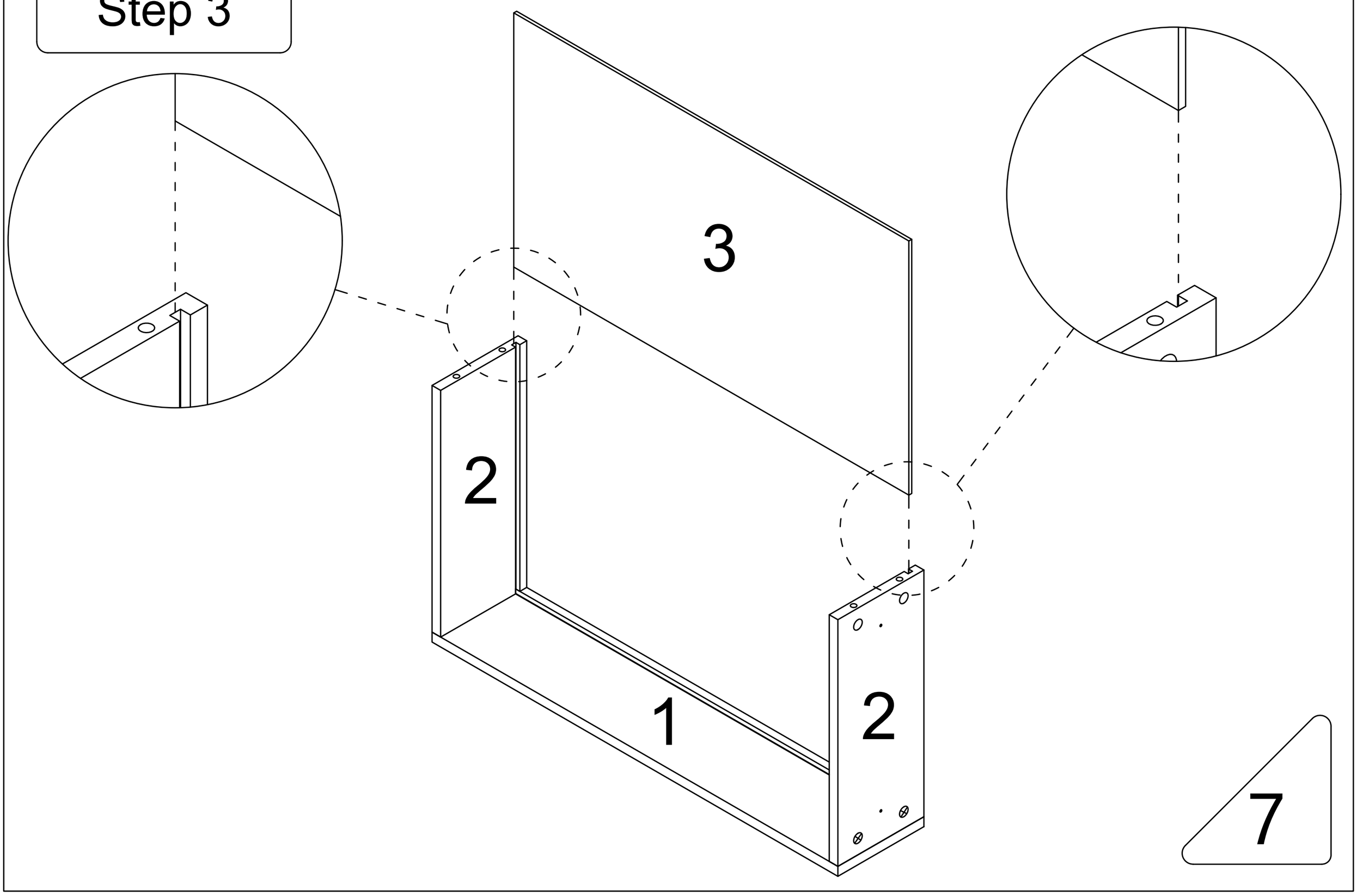

Step 4

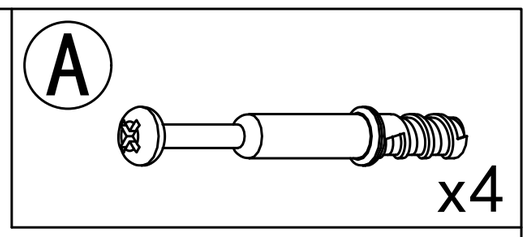

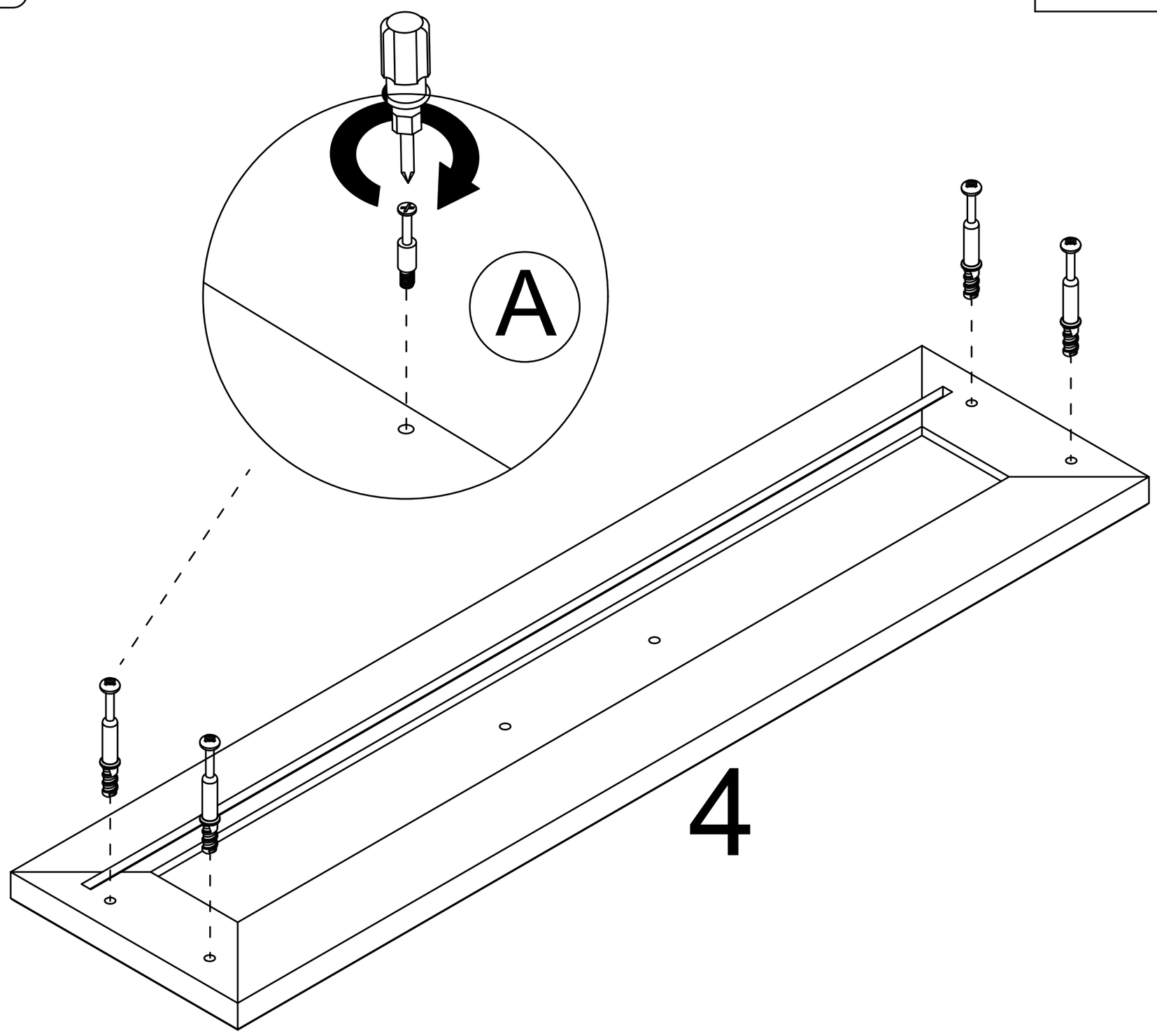

Step 5

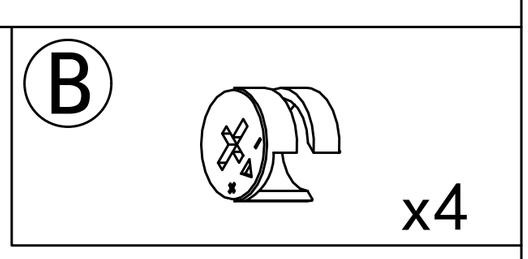

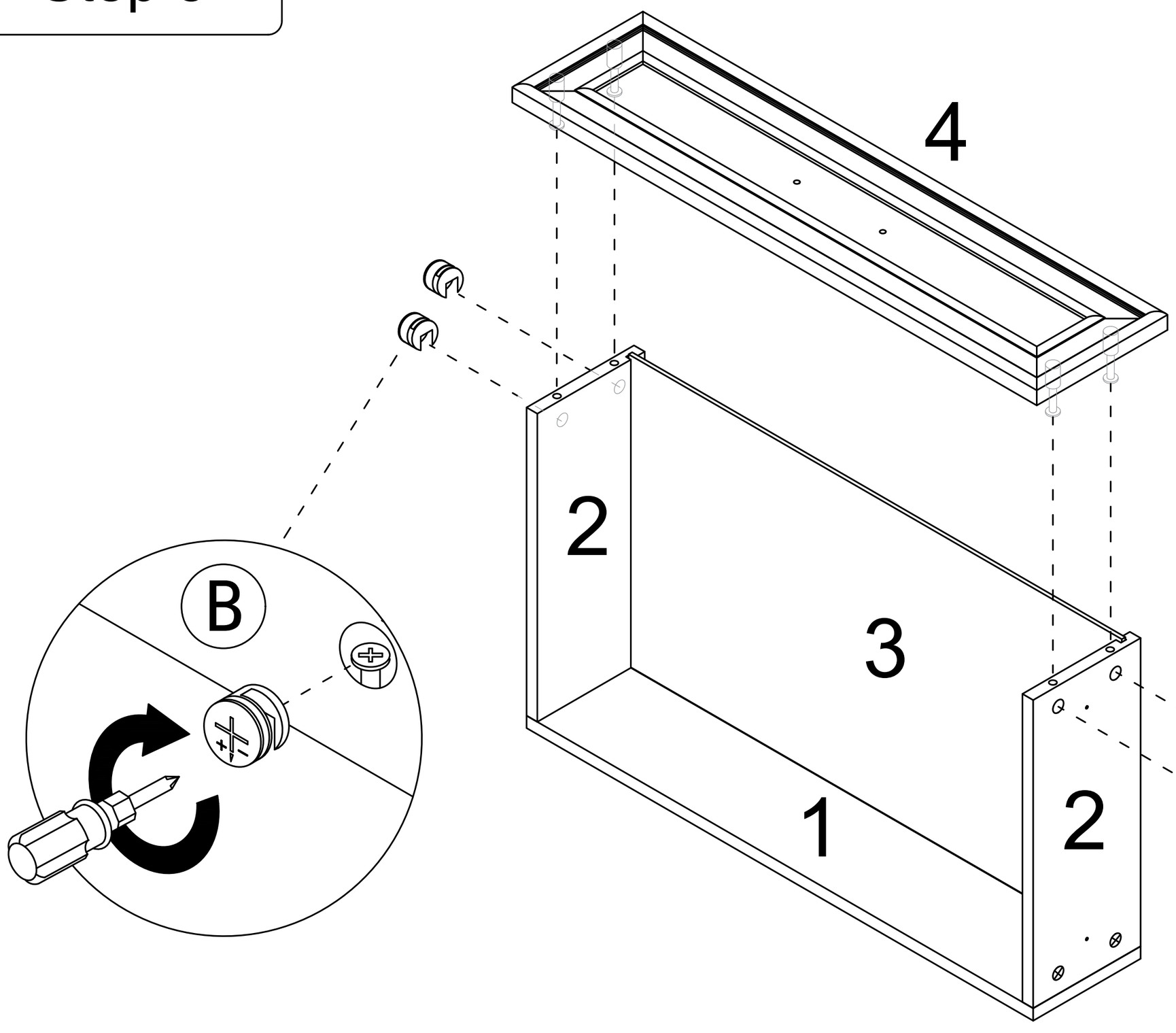

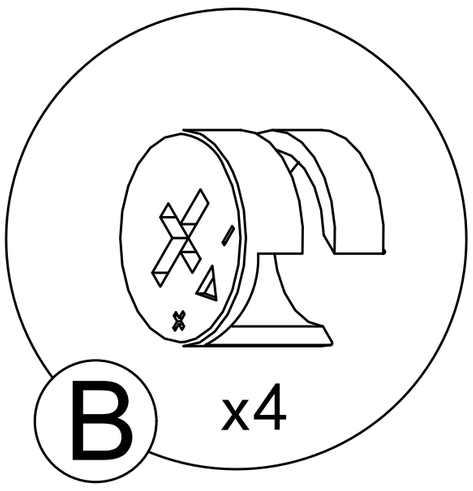

Drawer rail breakdown diagram

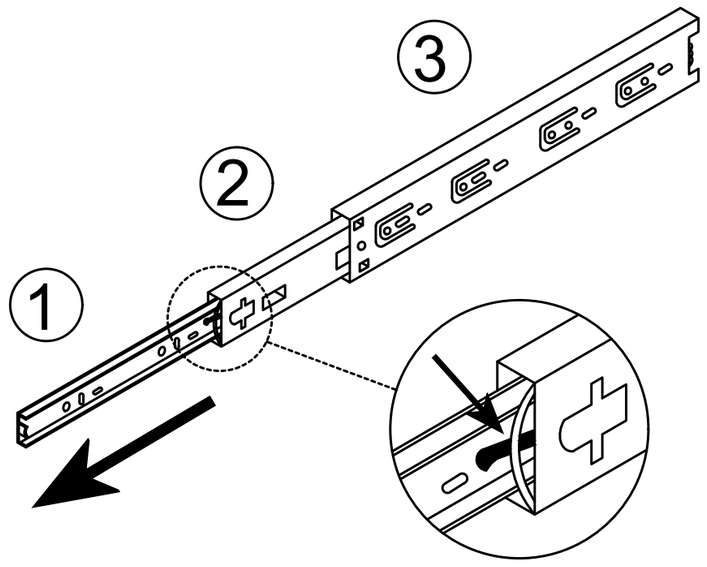

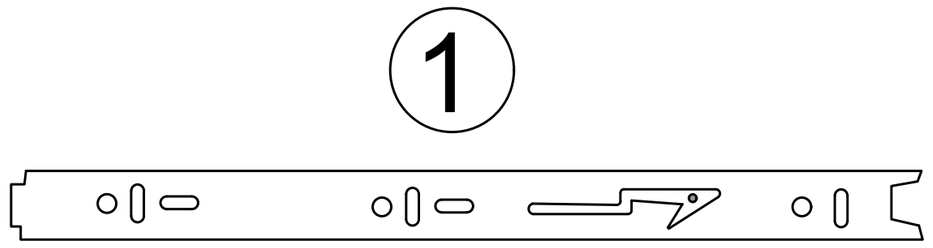

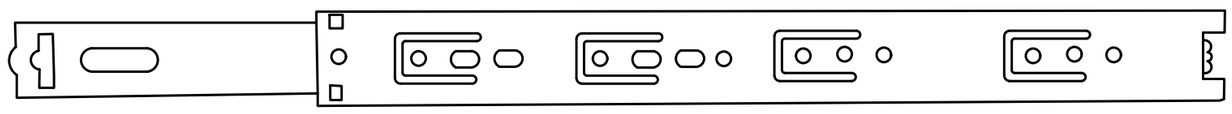

2 3

Step A : Pull the rails apart

Step B : Push the nylon buckle outward ④

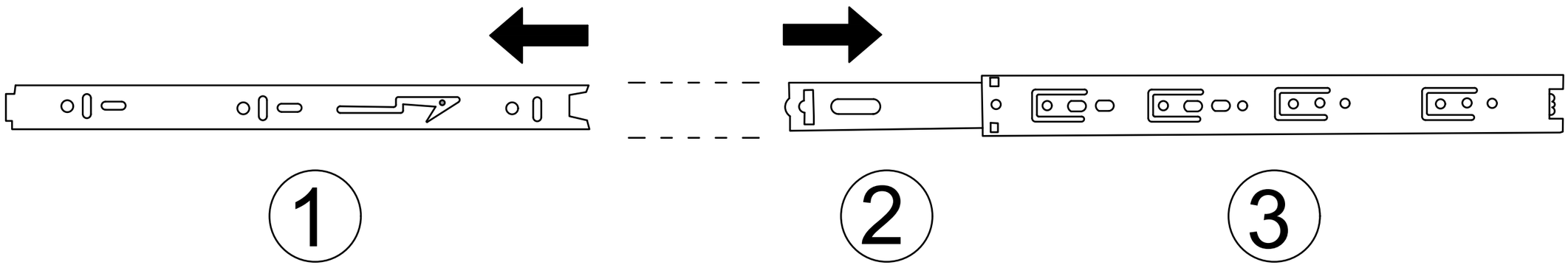

Step 6

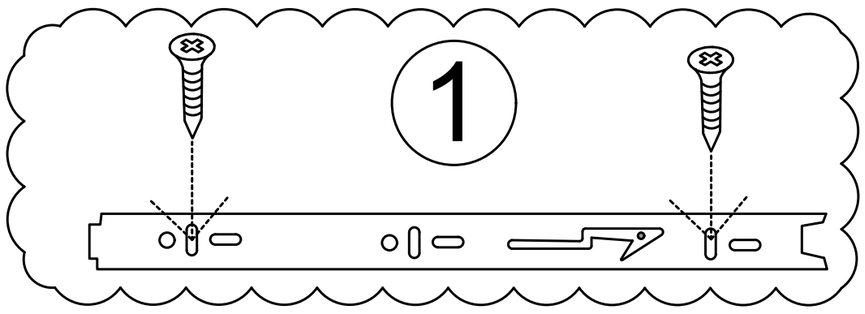

D x2

x4

E x1 x1

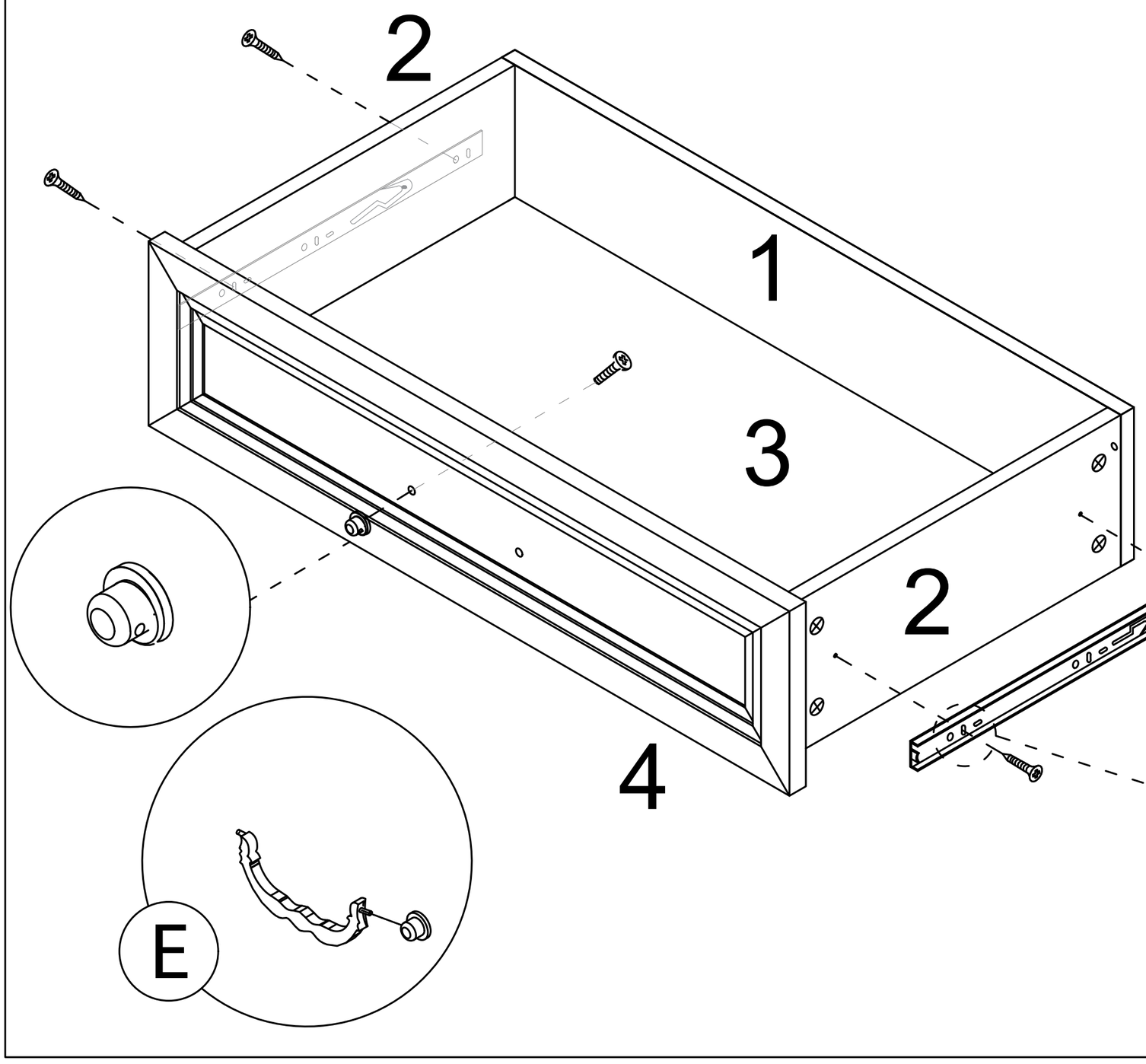

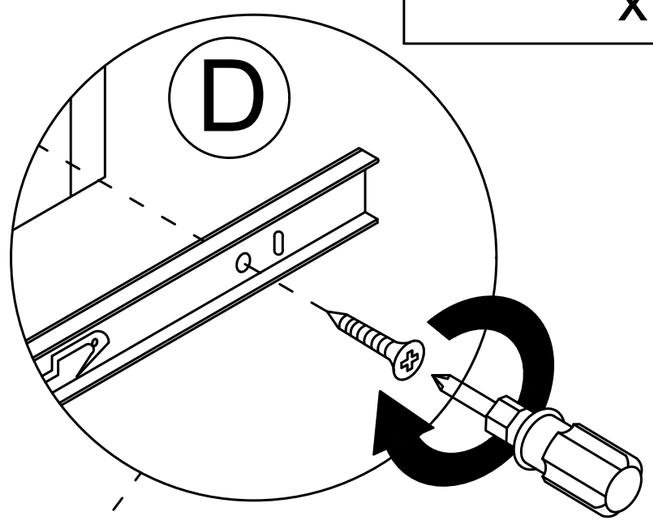

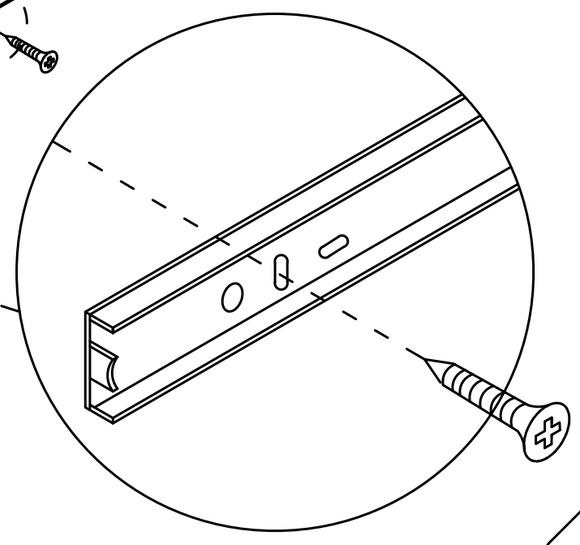

9

Step 7

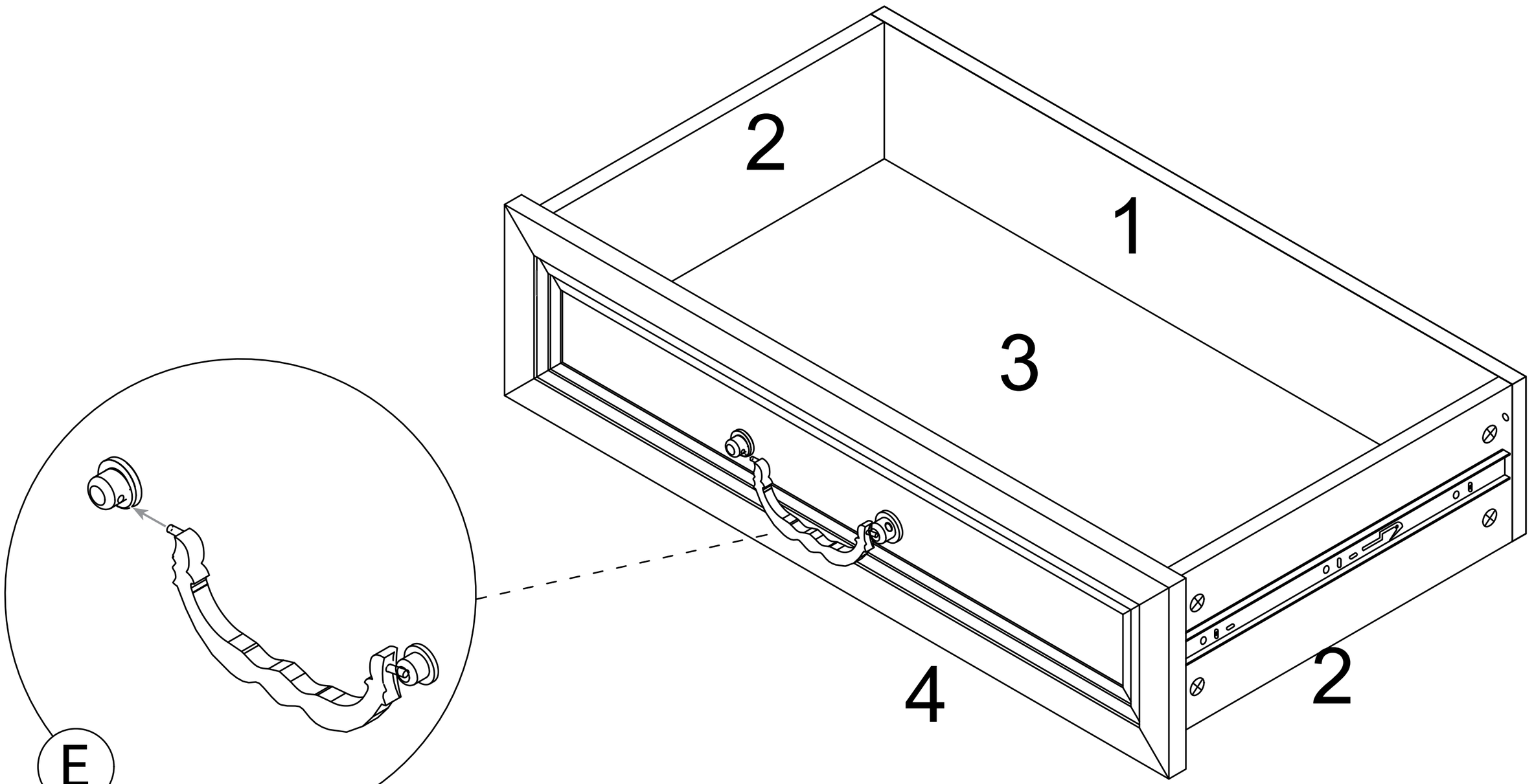

E x1

Step 8

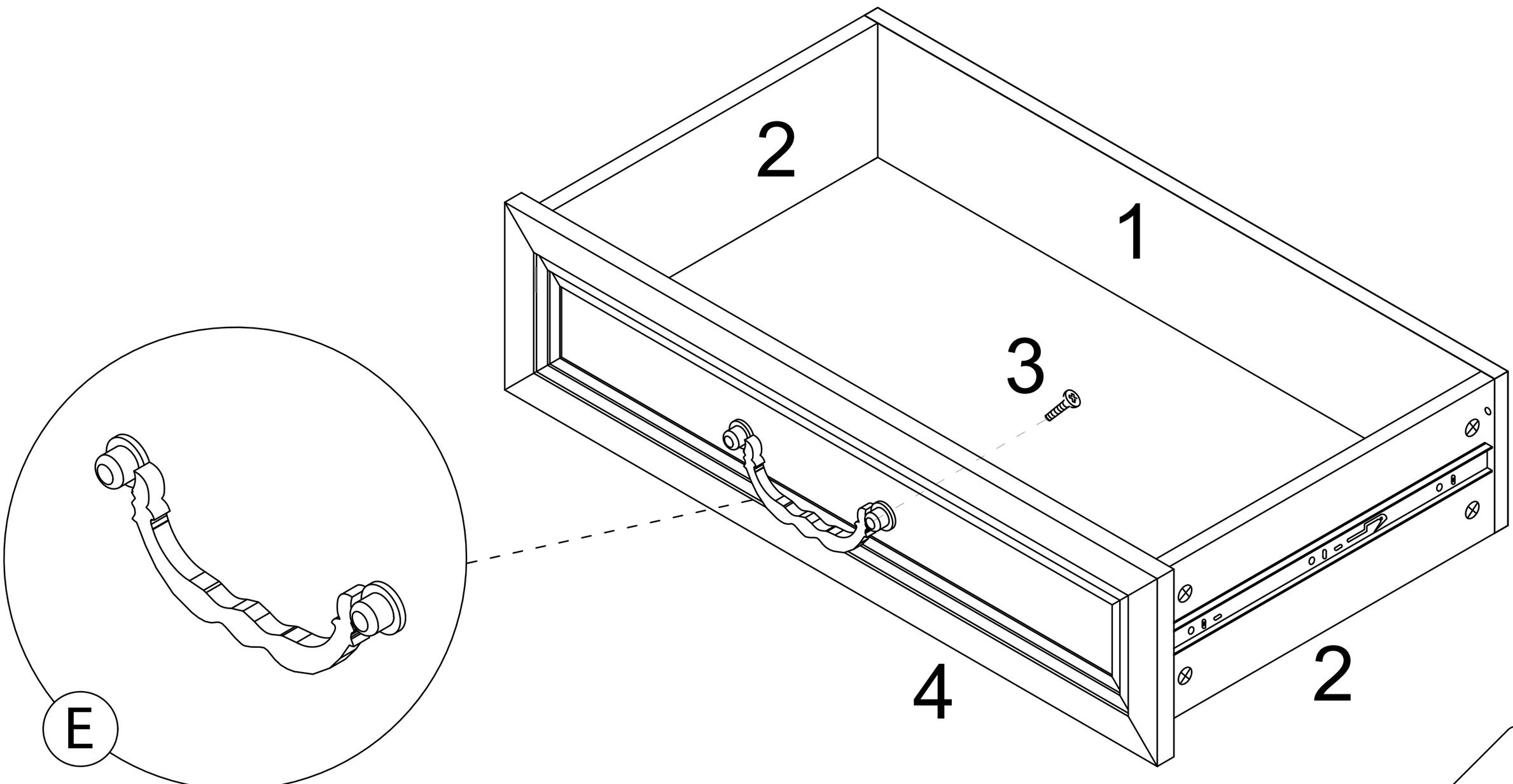

A	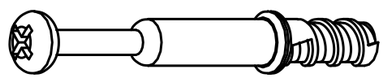	8pcs	B	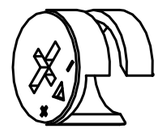	8pcs	E	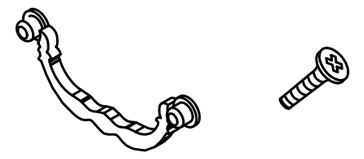	1pcs / 2pcs
D	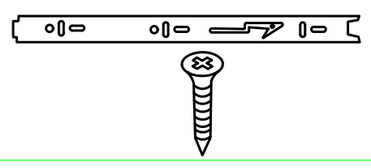	2pcs / 4pcs						

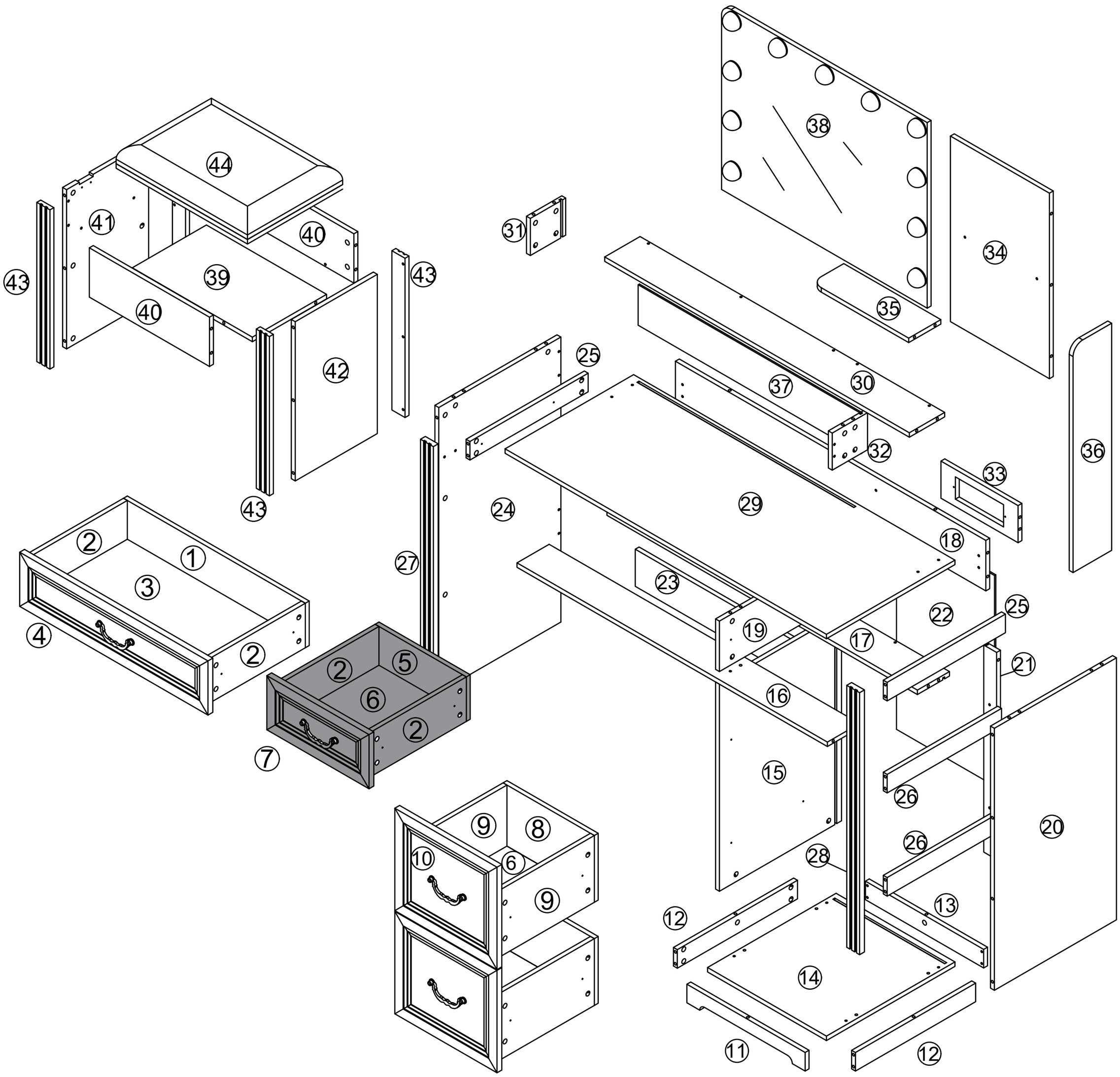

Step 9

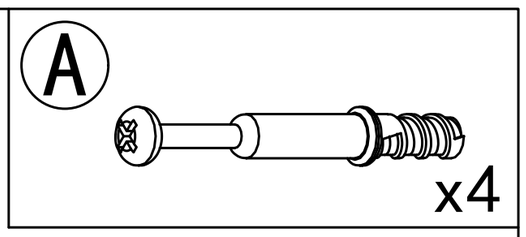

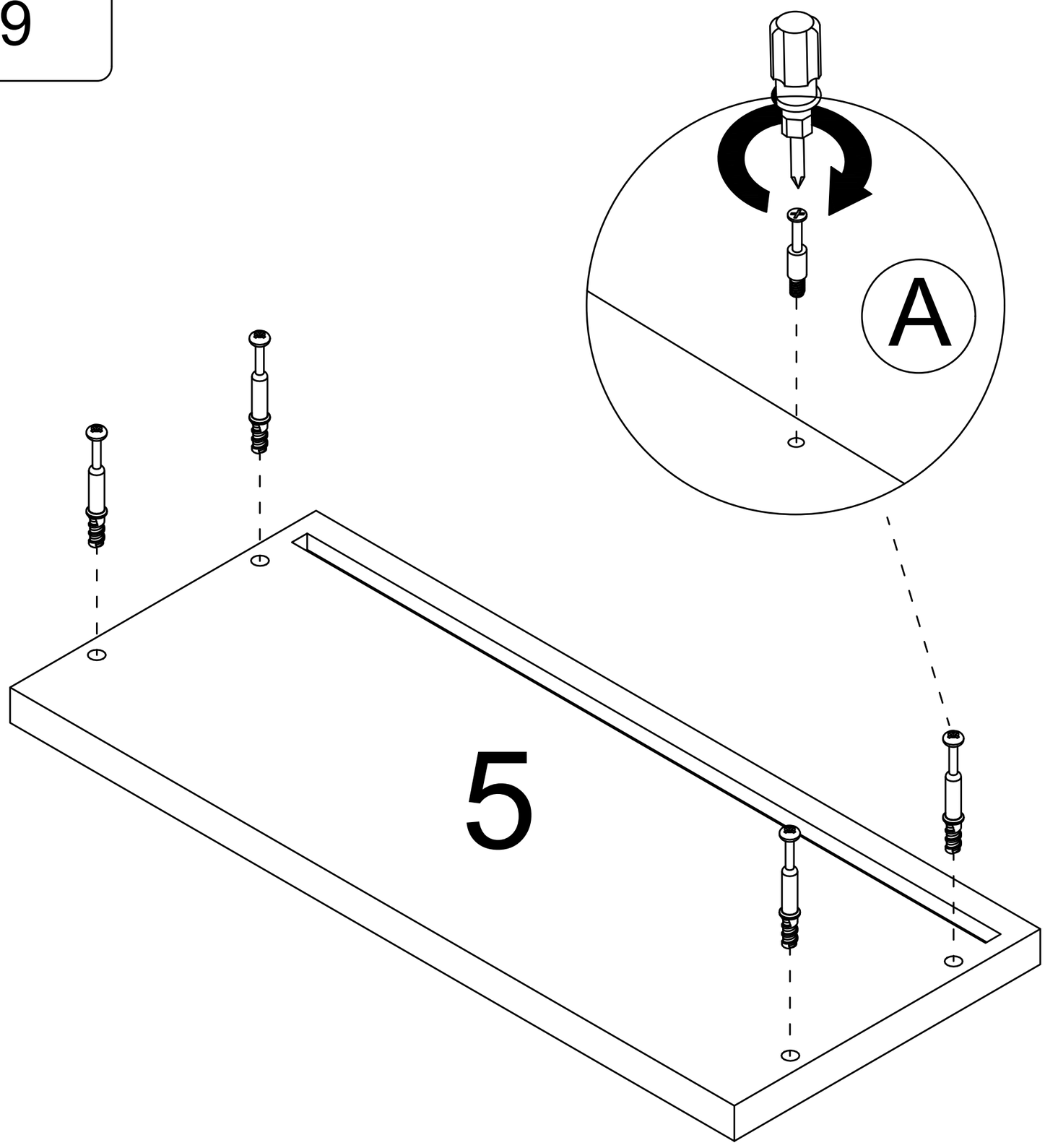

Step 10

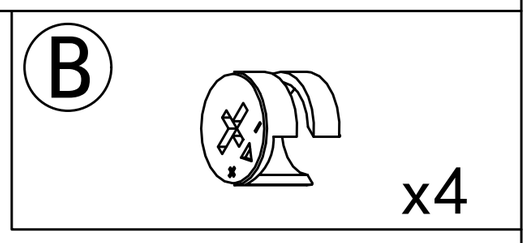

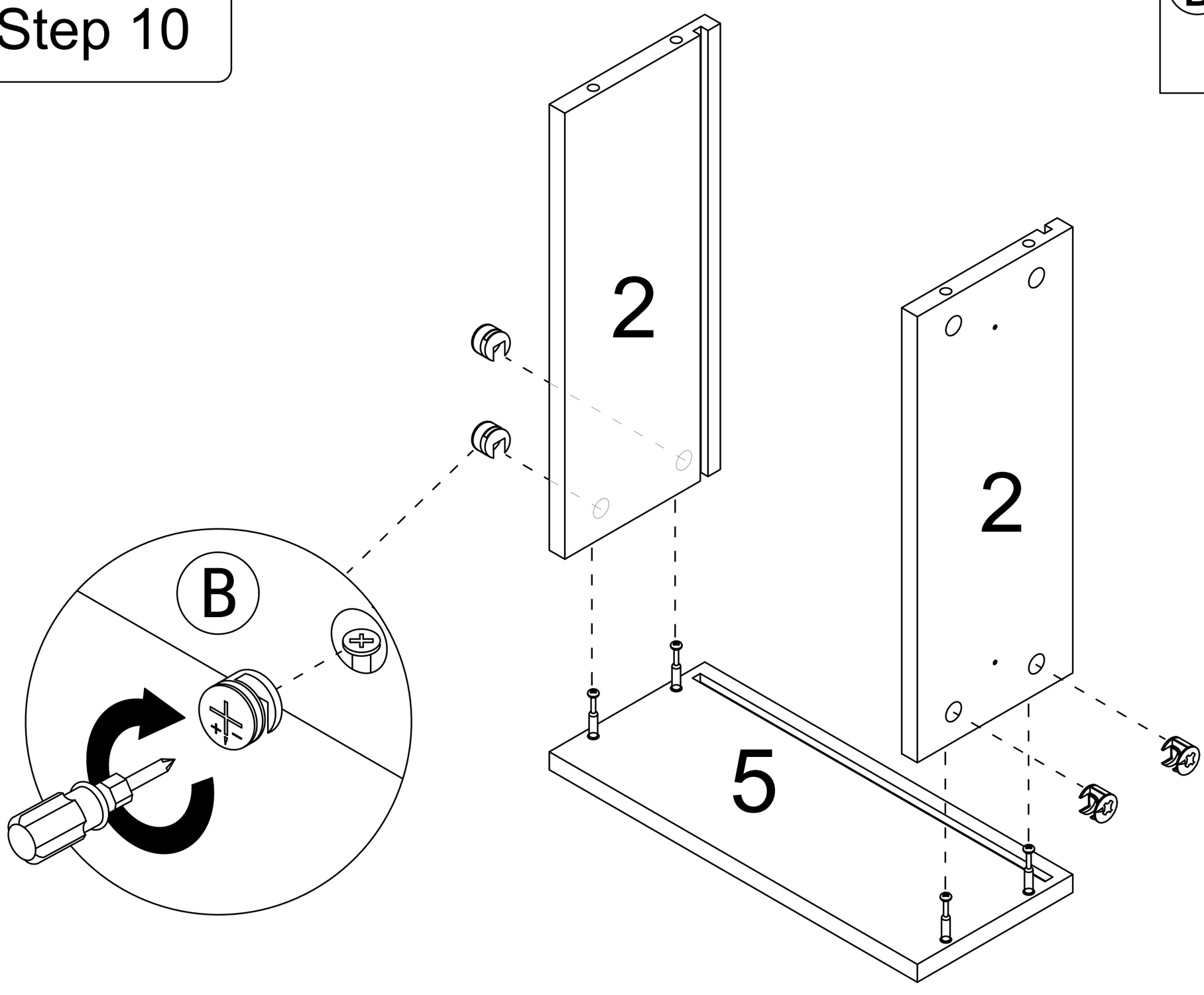

Step 11

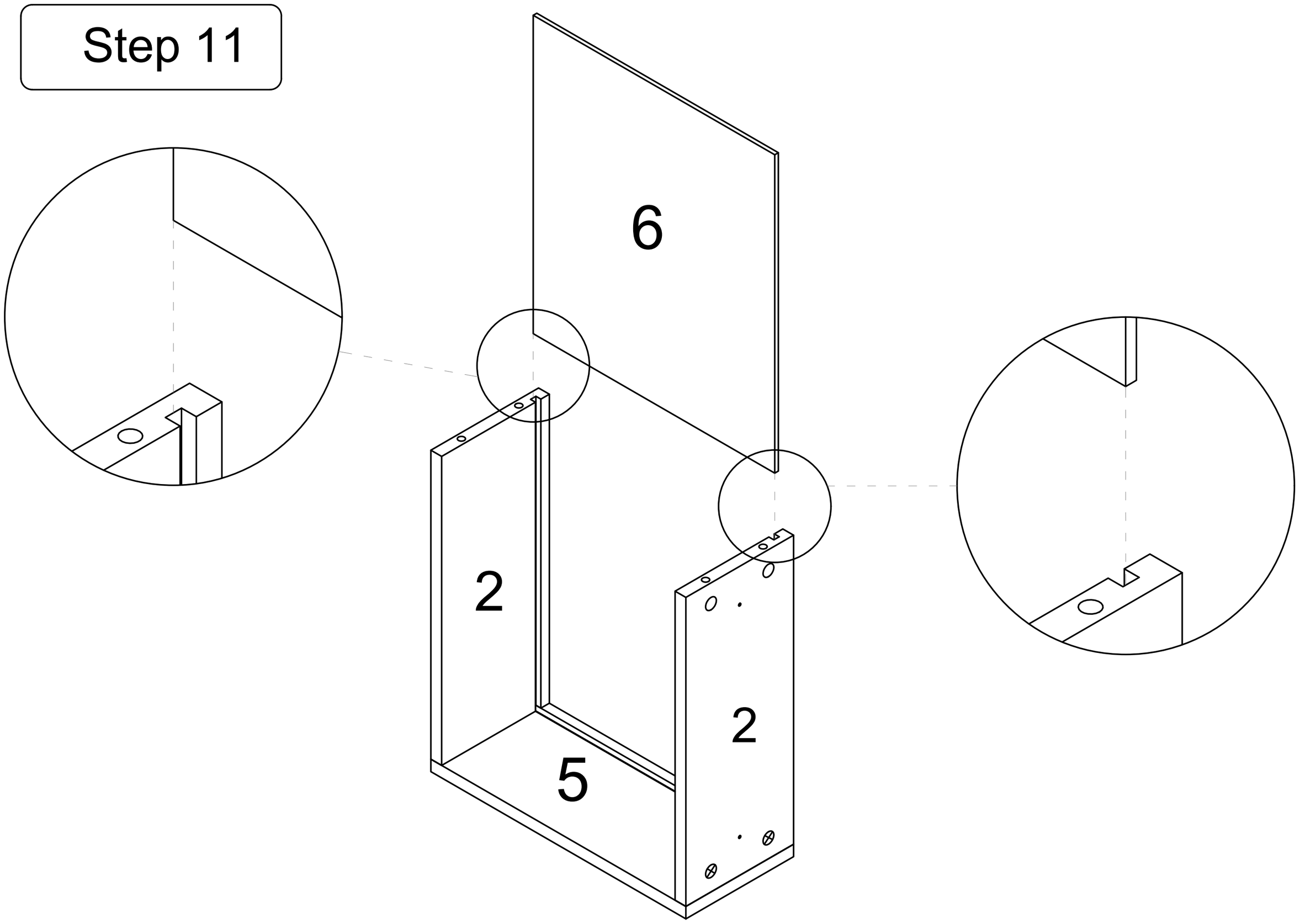

Step 12

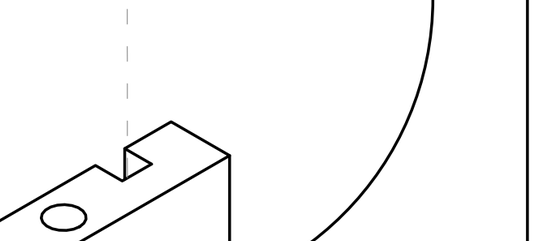

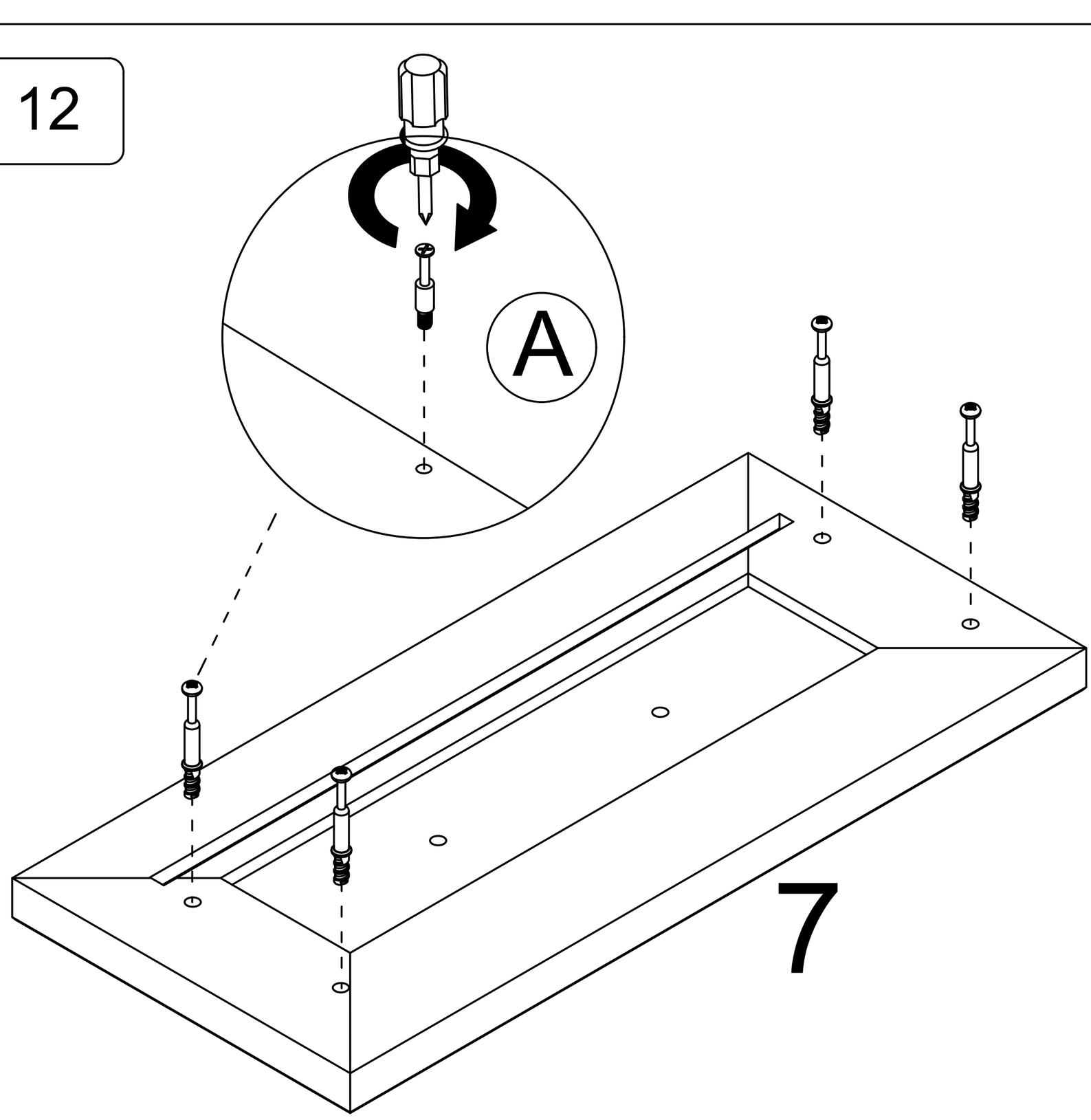

Step 13

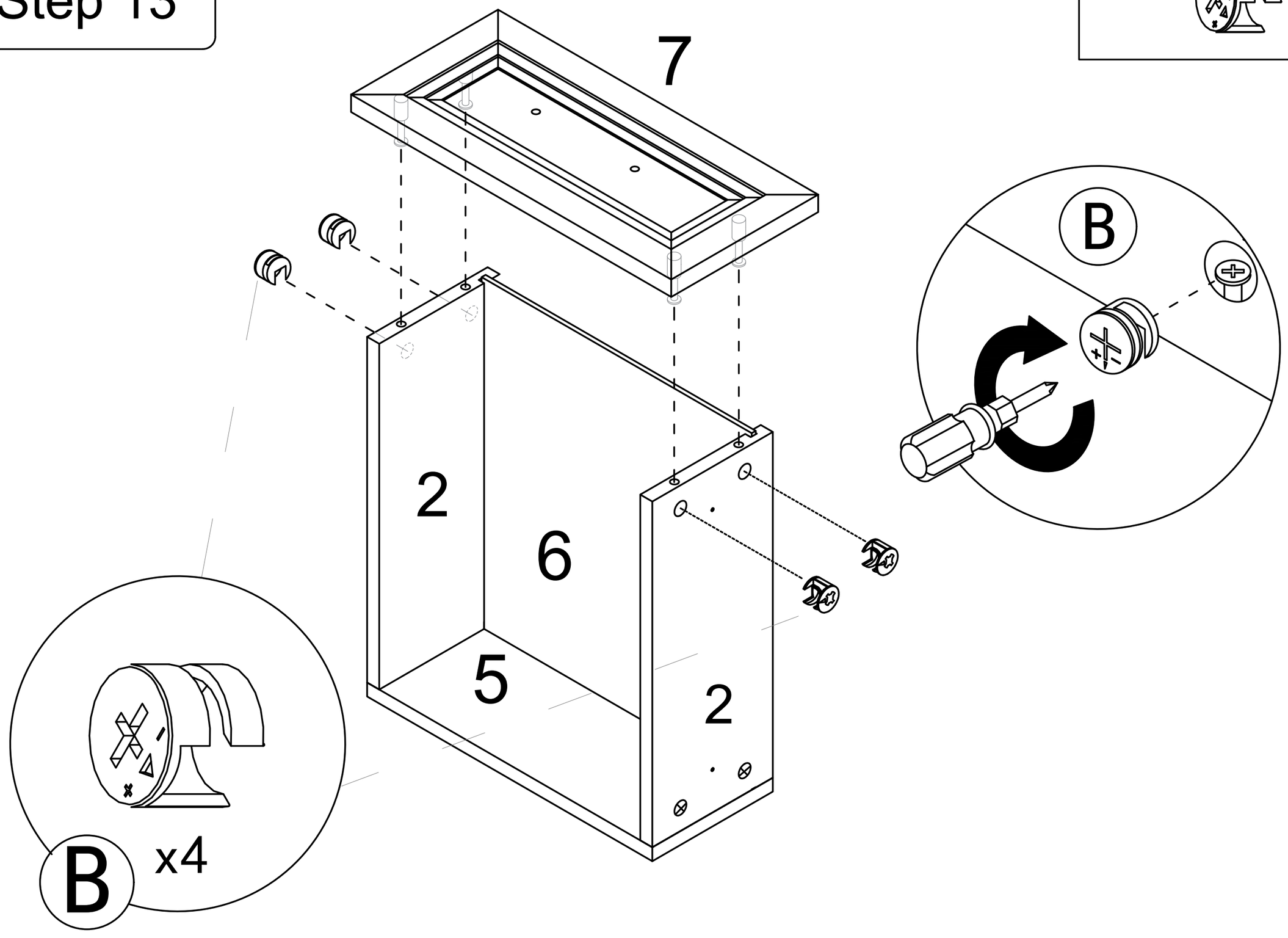

B x4

Step 14

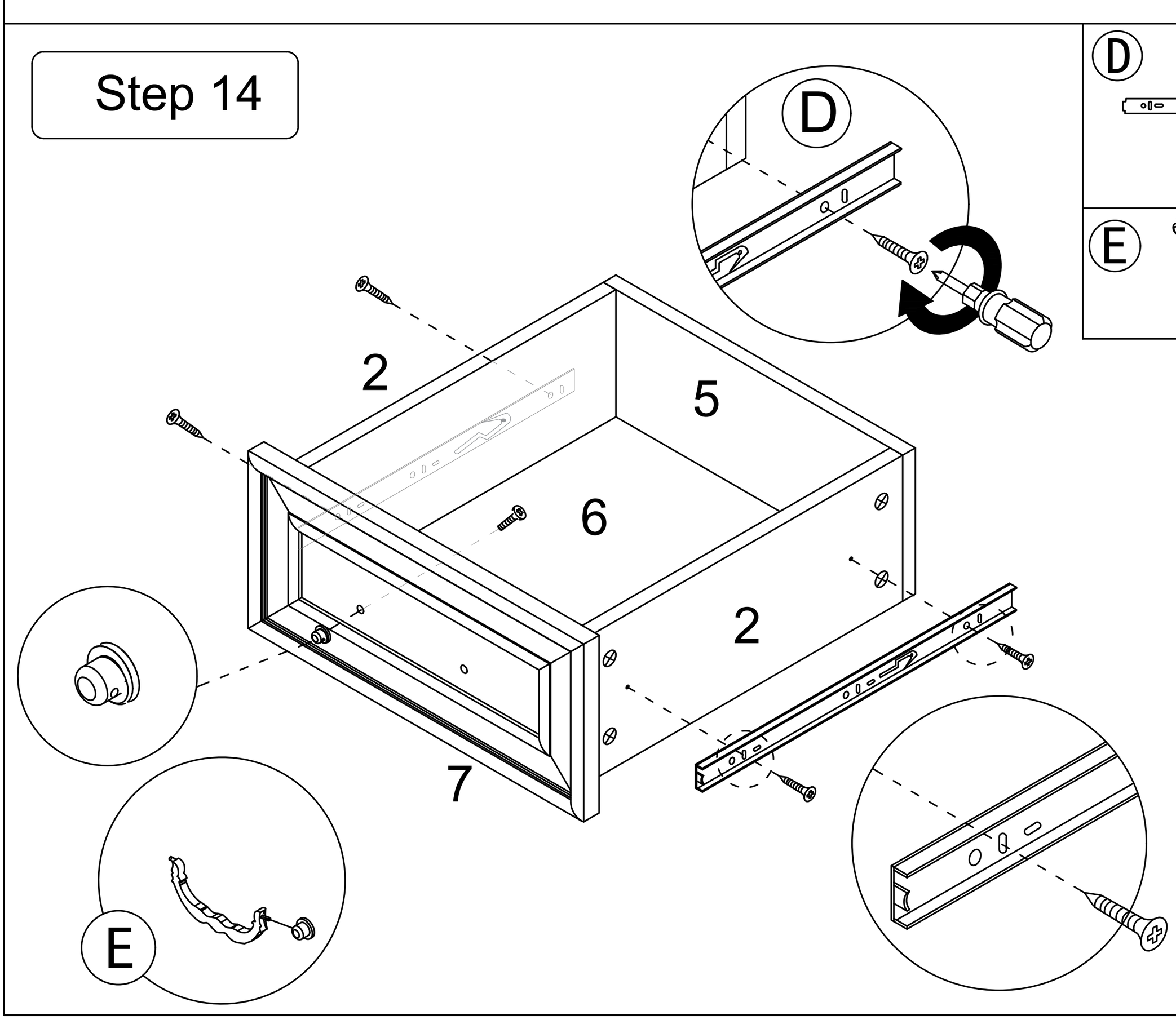

D x2

x4

E x1 x1

14

Step 15

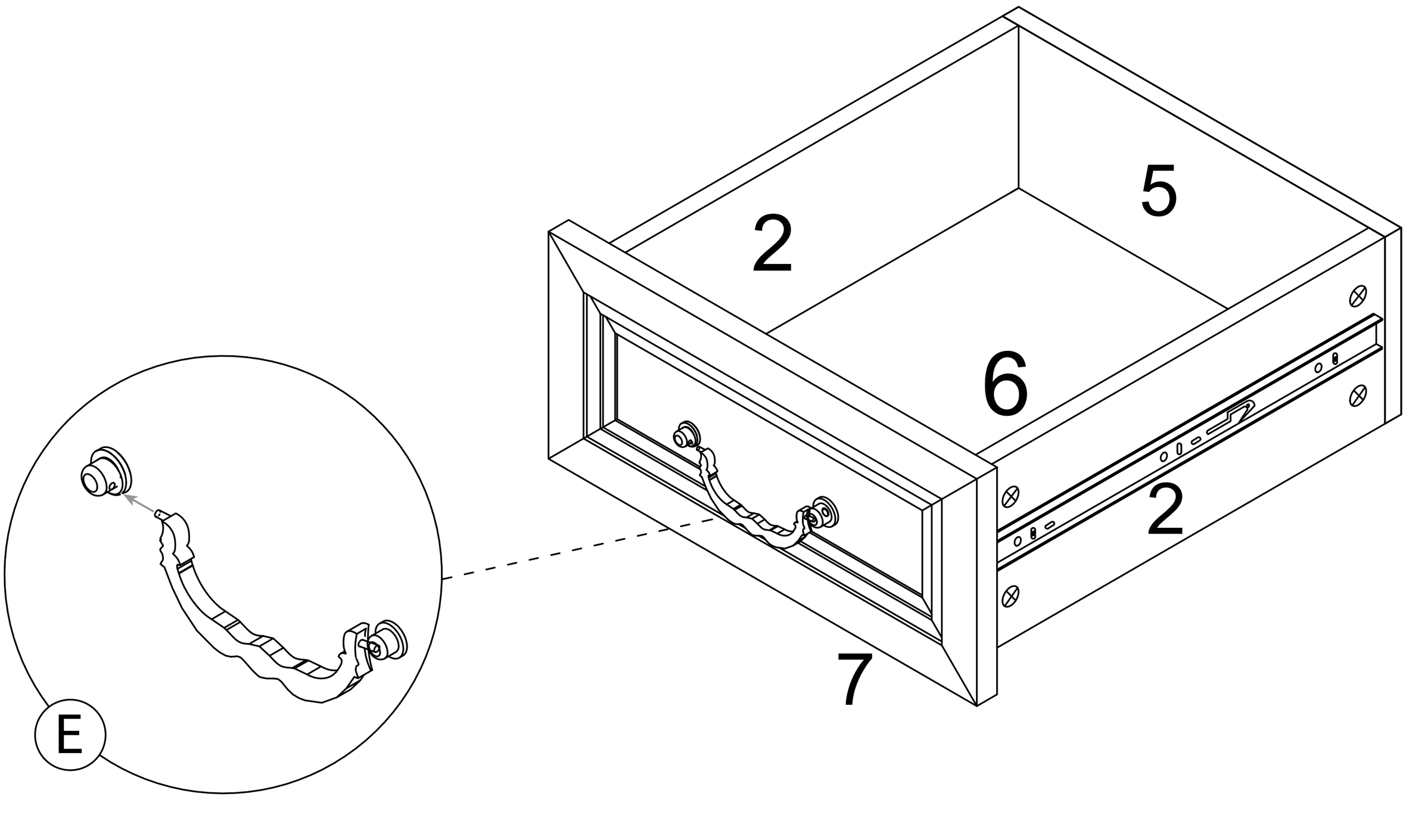

Step 16

E x1

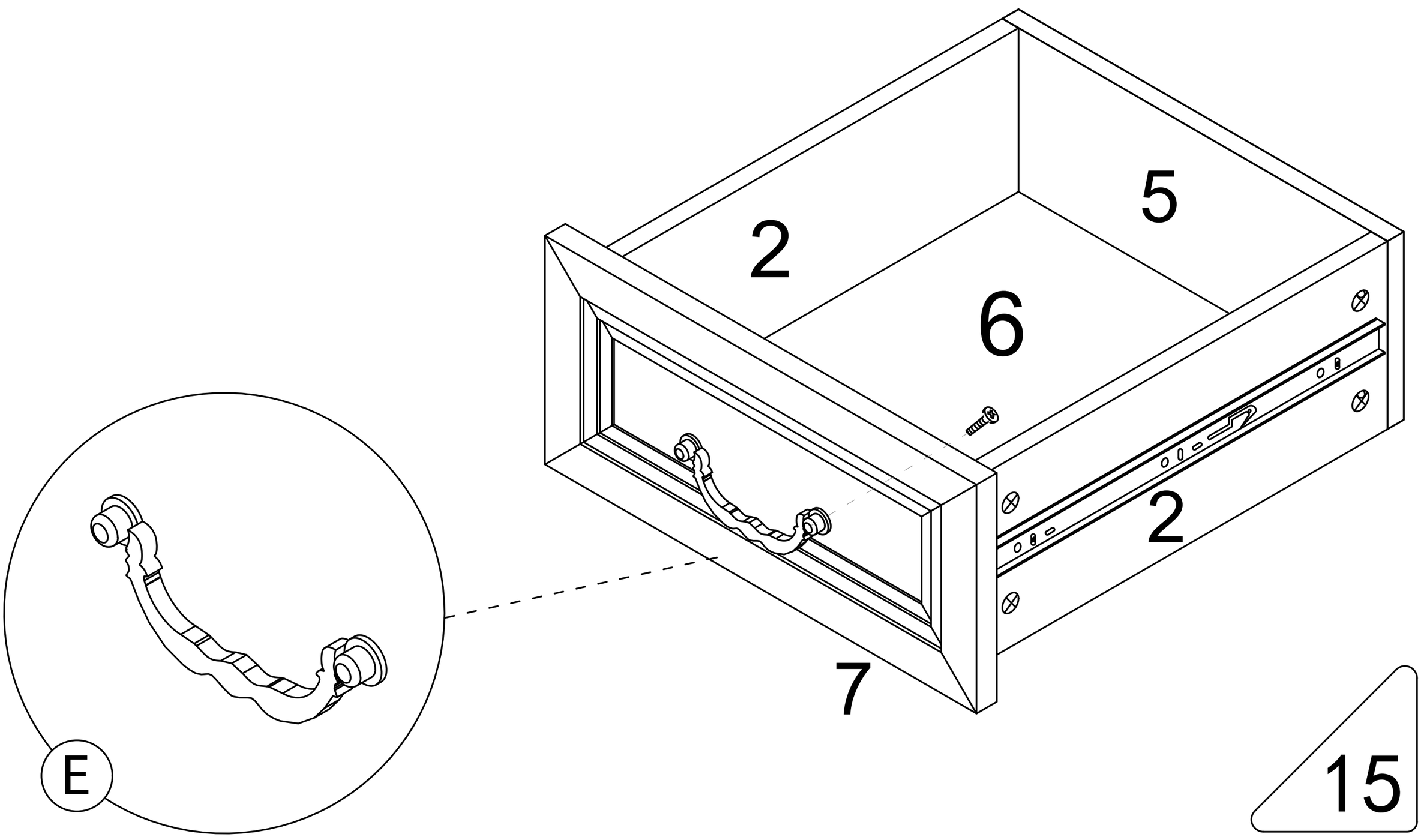

A	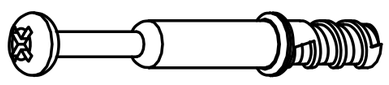	16pcs	B		16pcs	E		2pcs / 4pcs
D	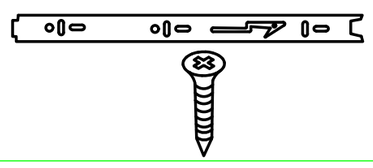	4pcs / 8pcs						

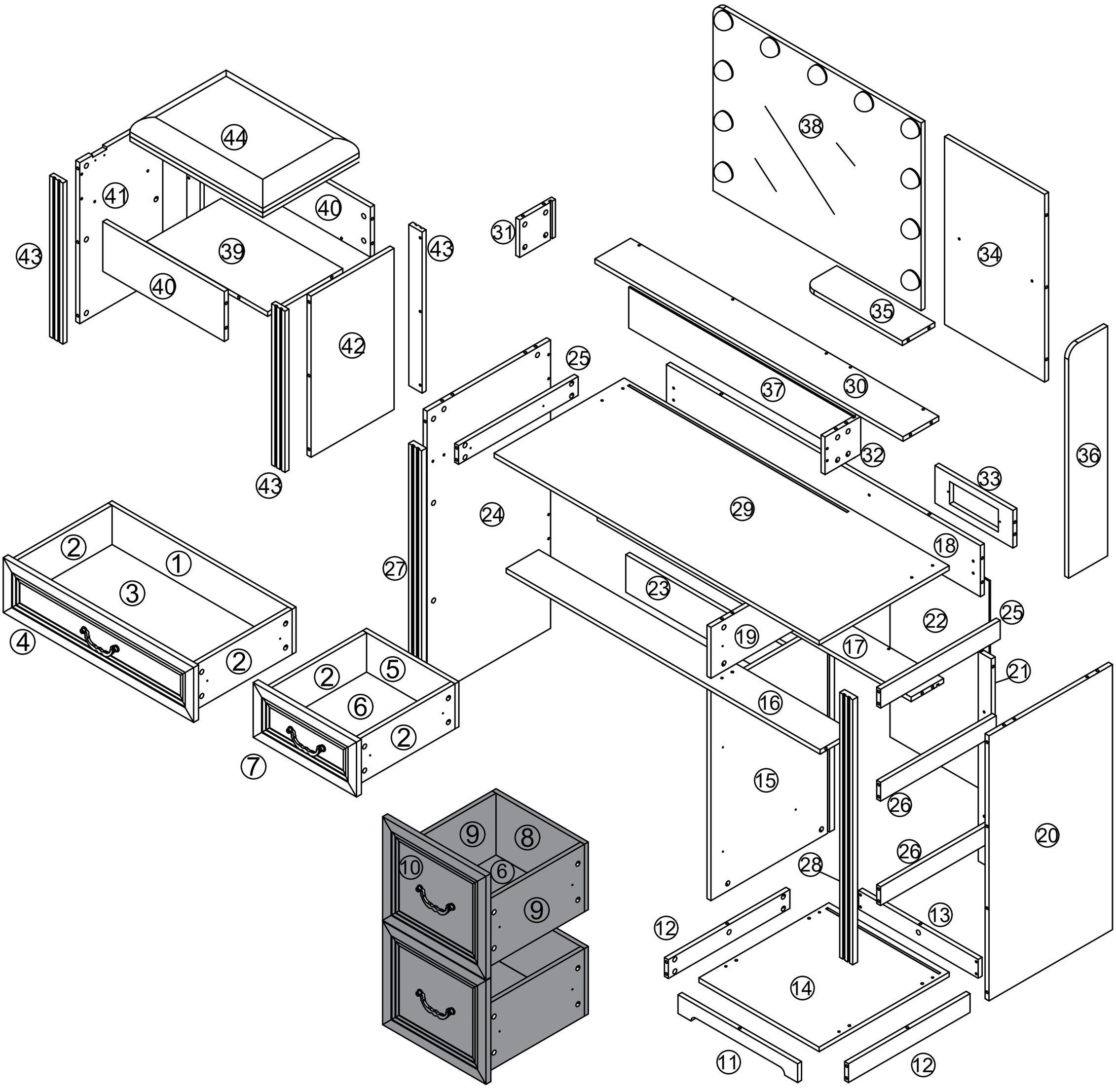

Step 17

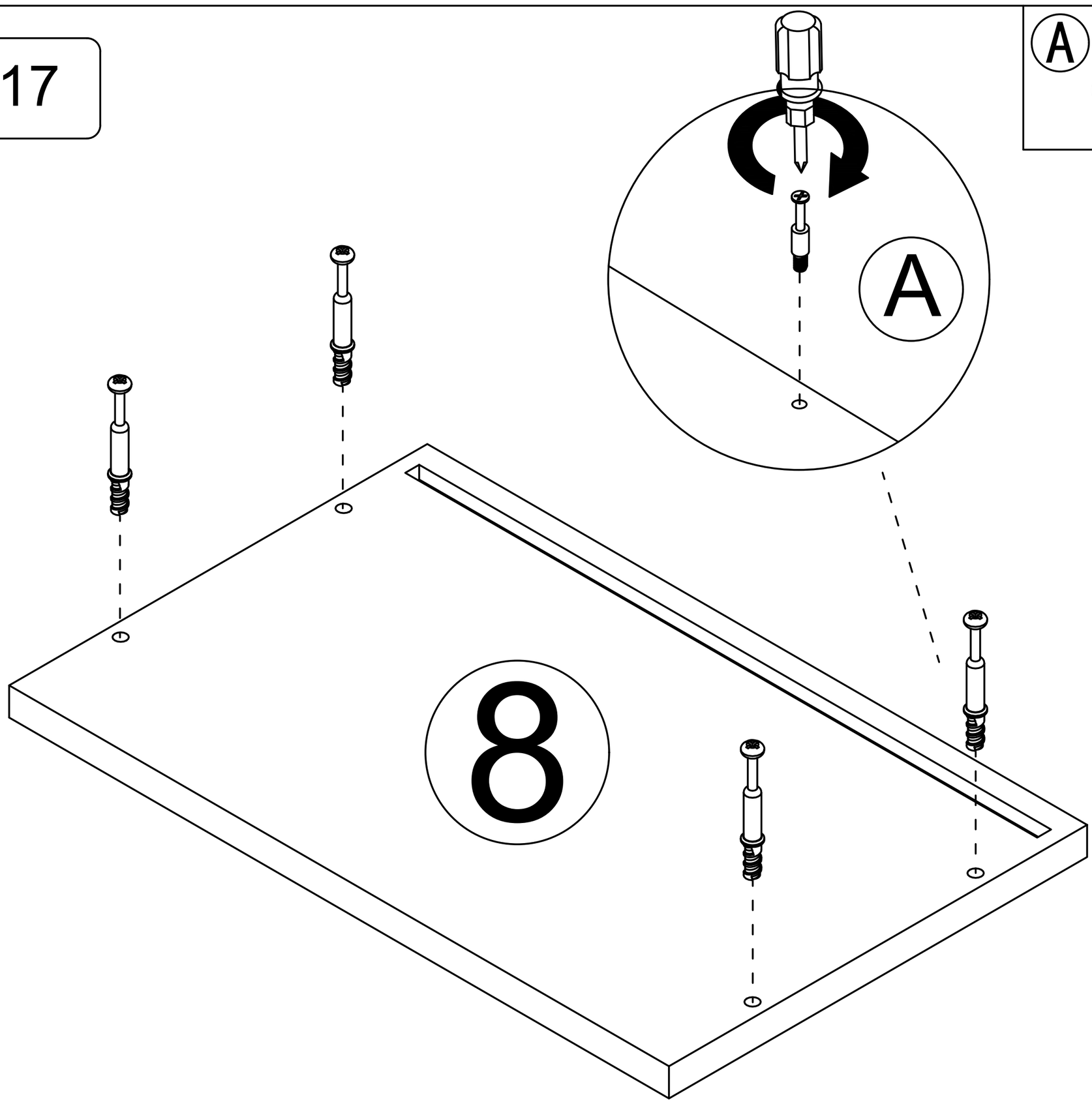

Step 18

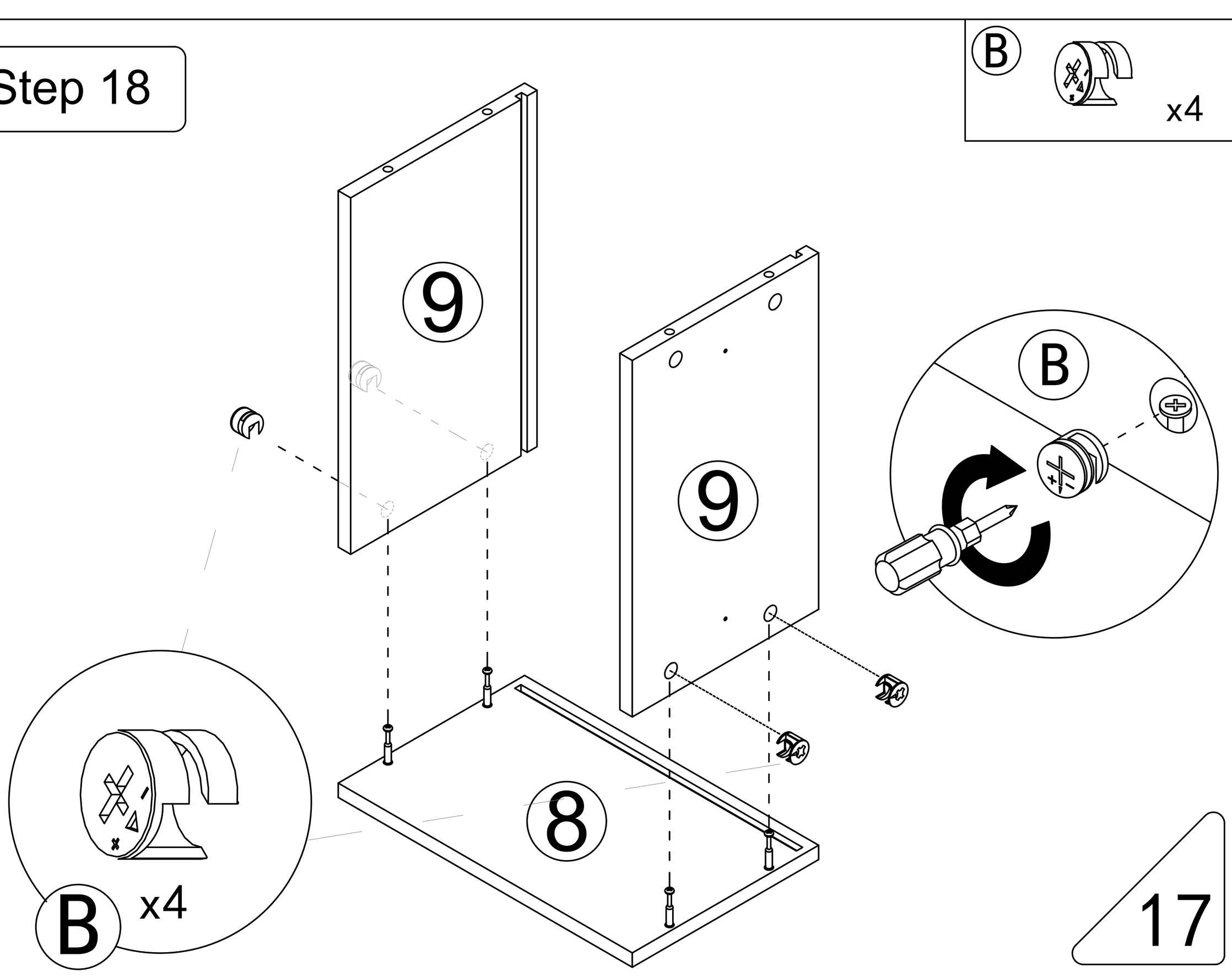

Step 19

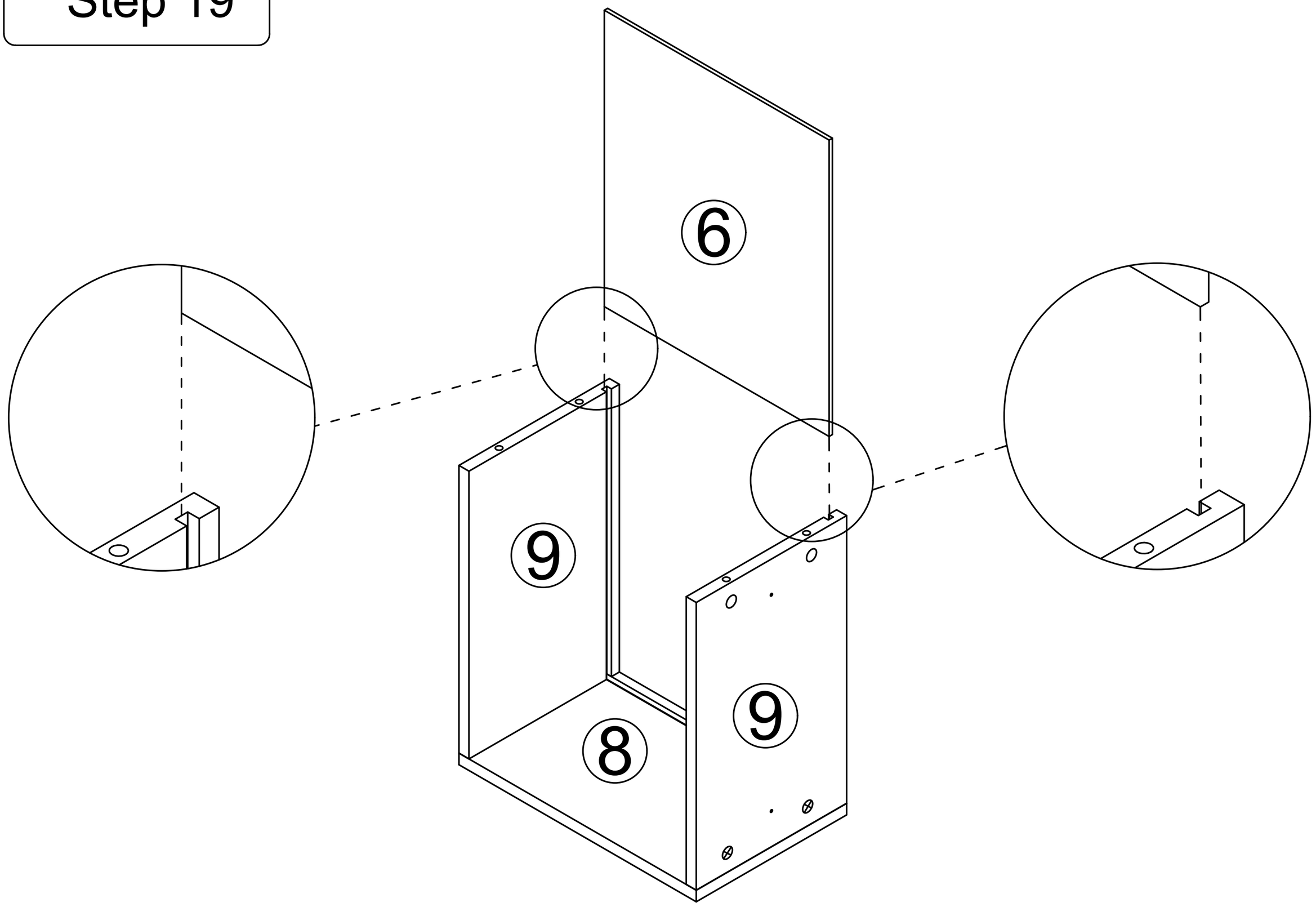

Step 20

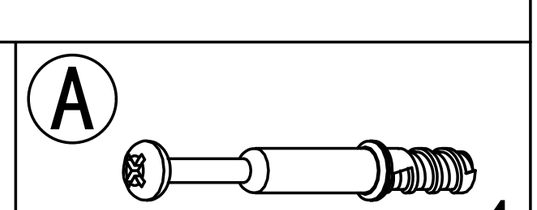

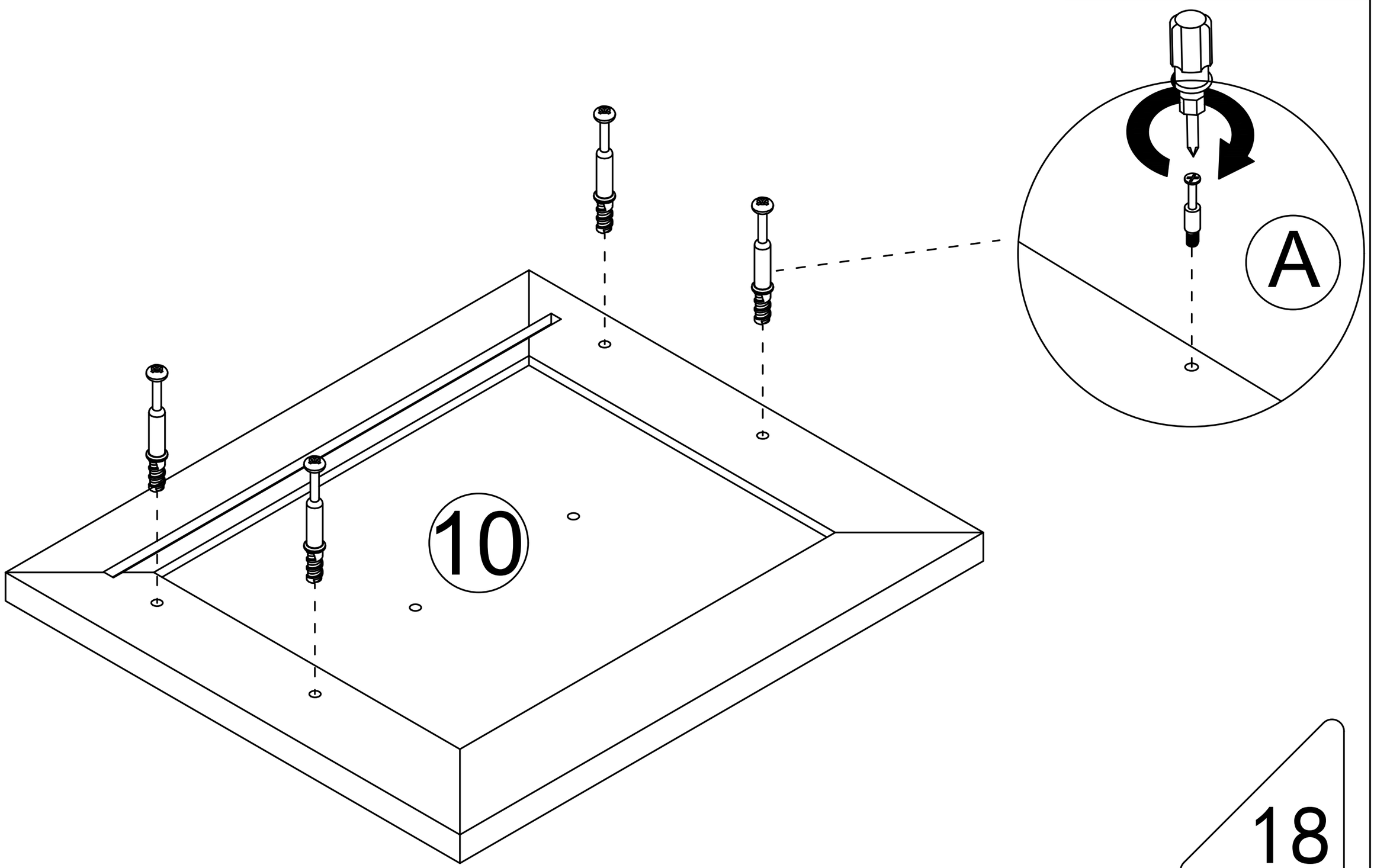

Step 21

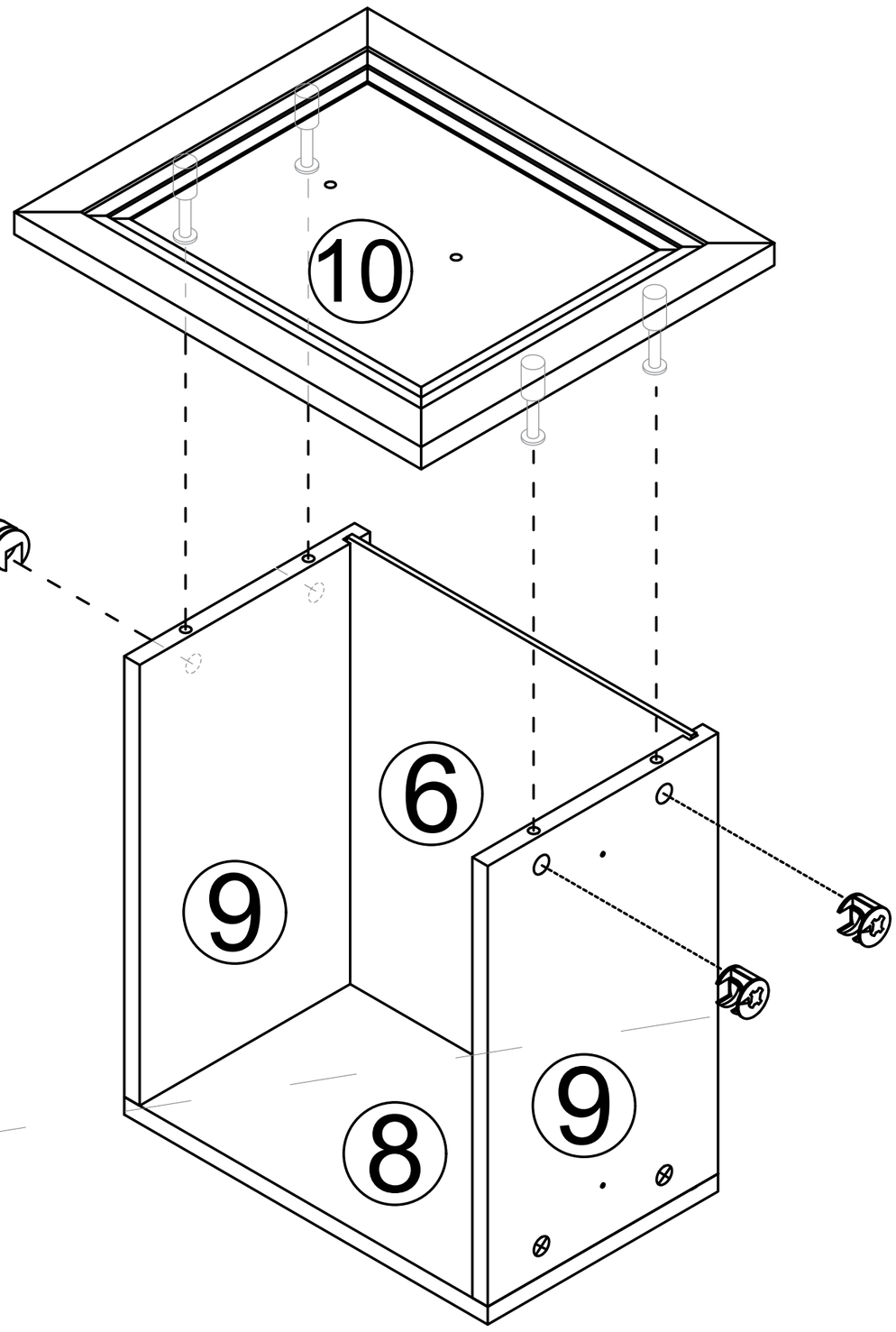

B x4

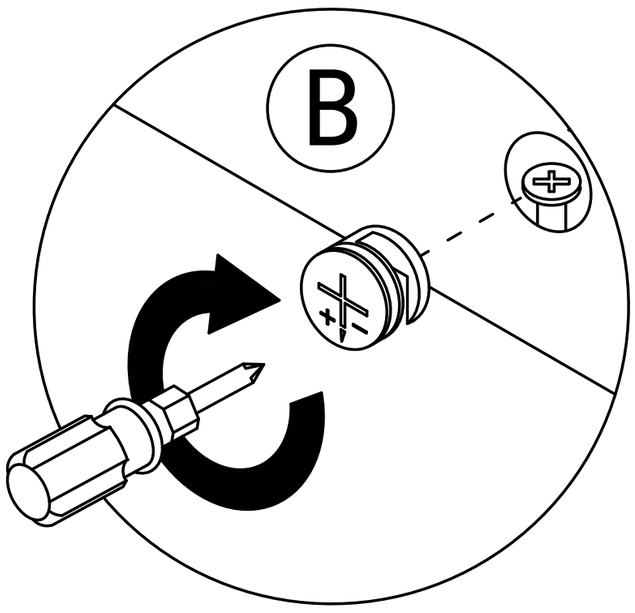

B x4

Step 22

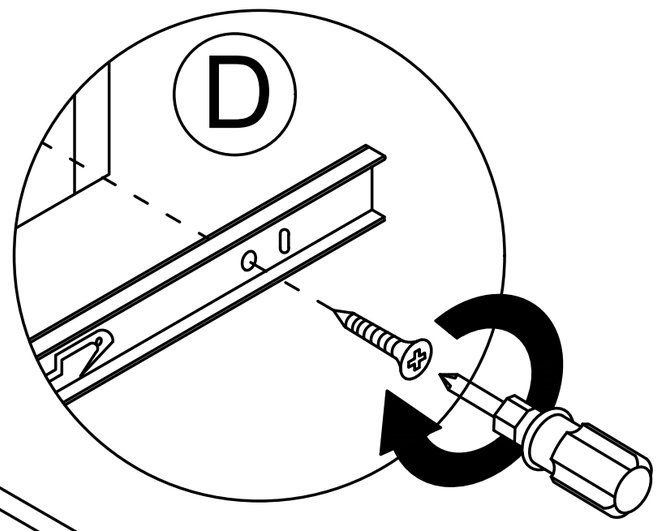

D x2

x4

E x1 x1

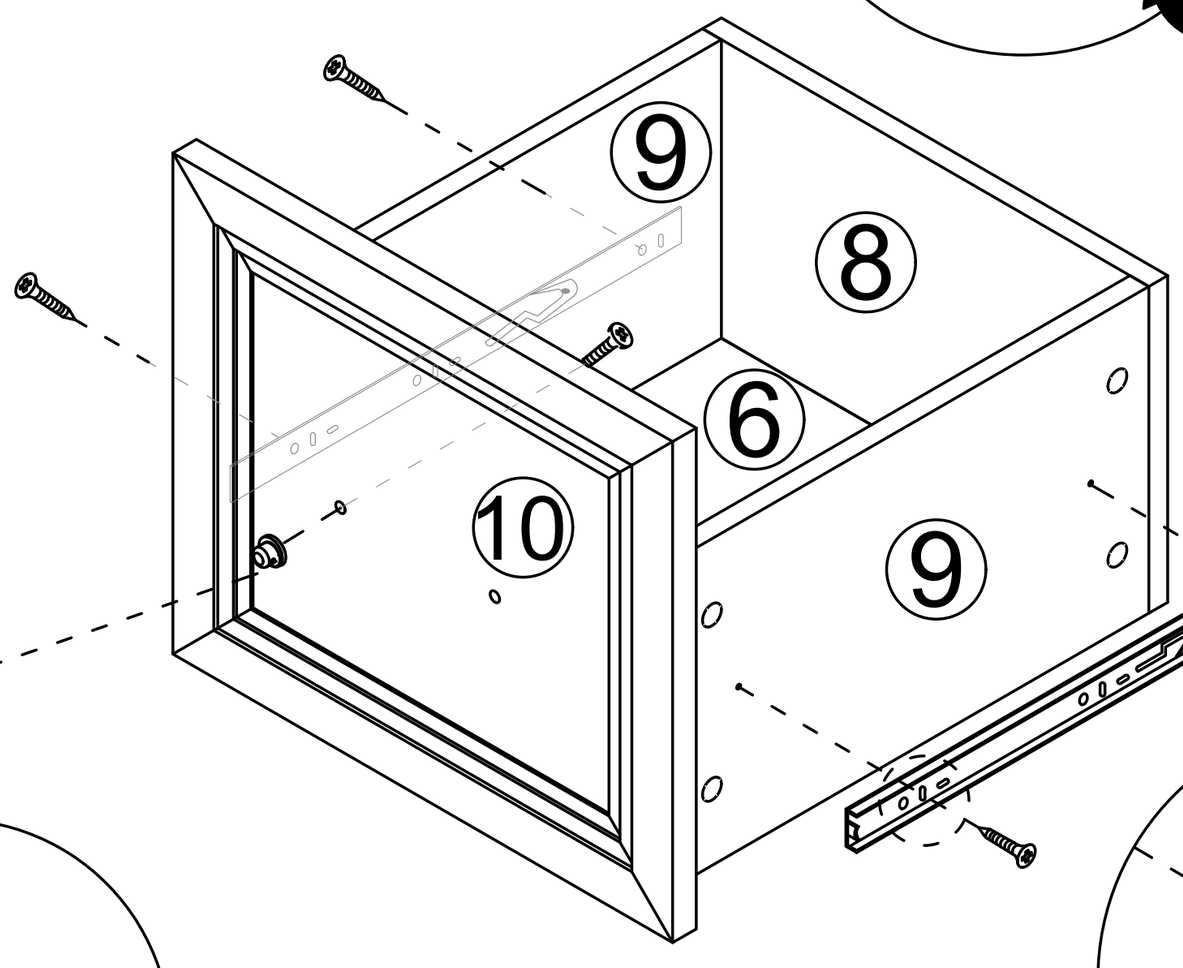

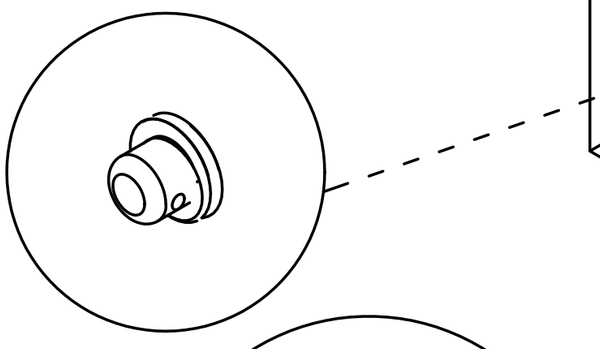

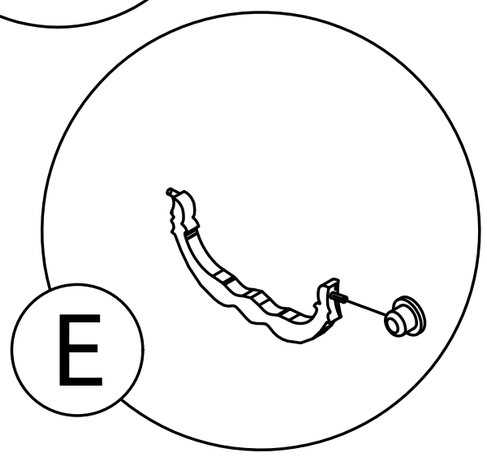

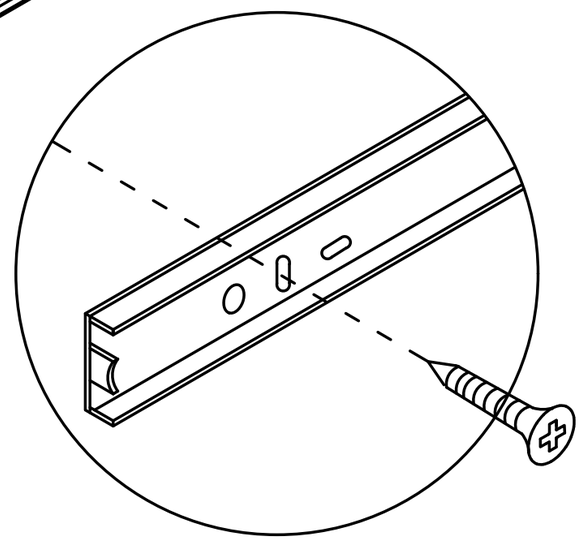

Step 23

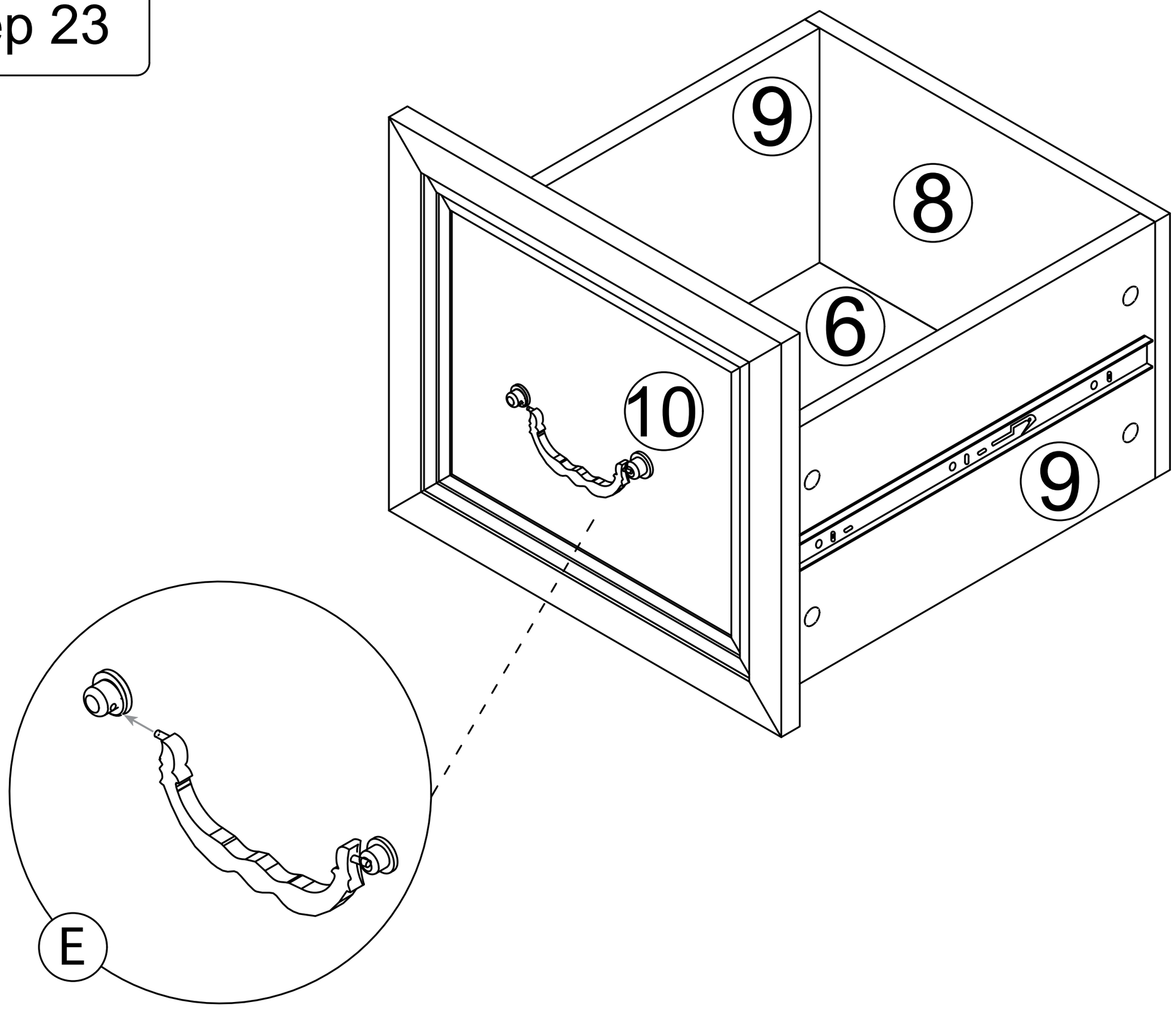

Step 24

E x1

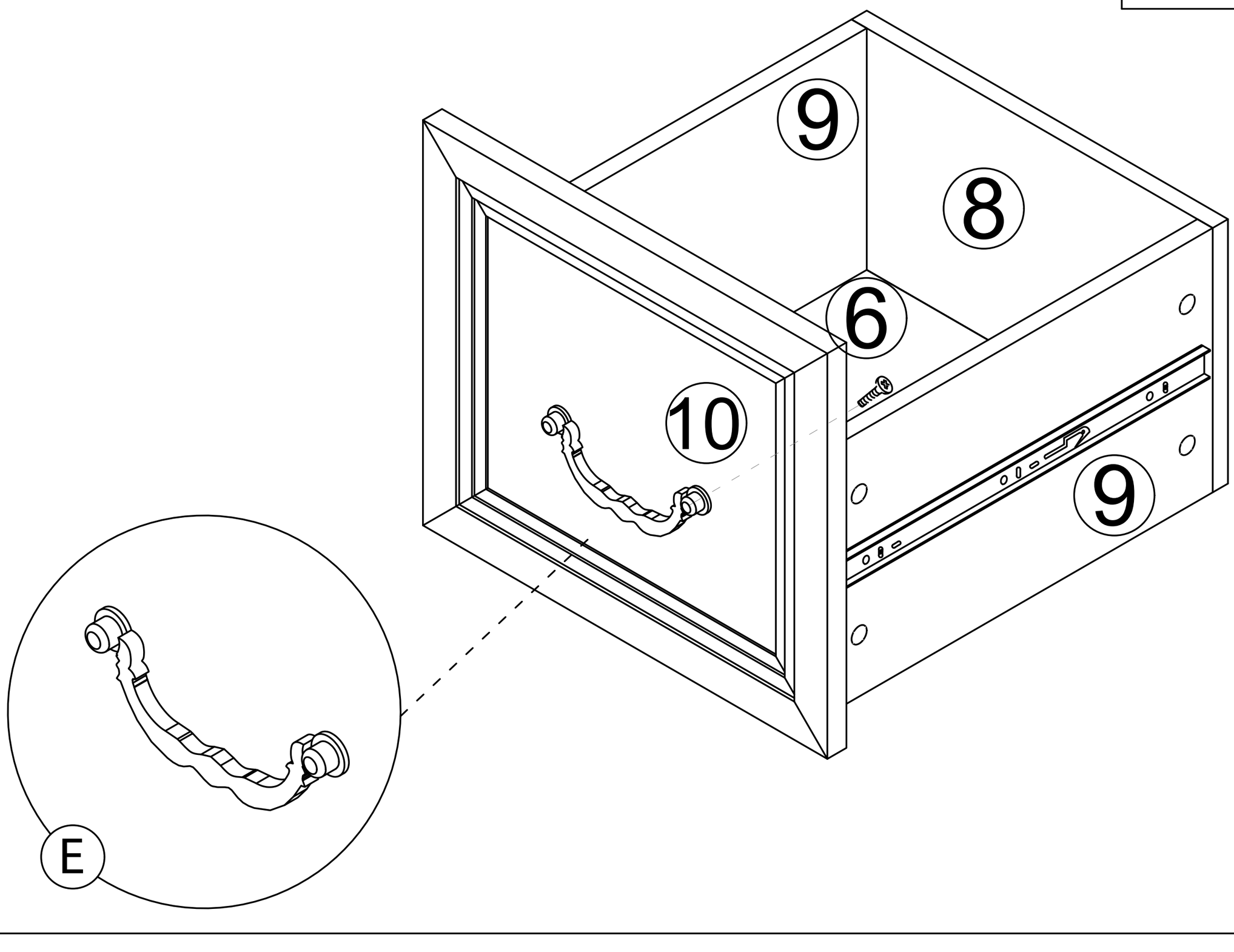

Step 25

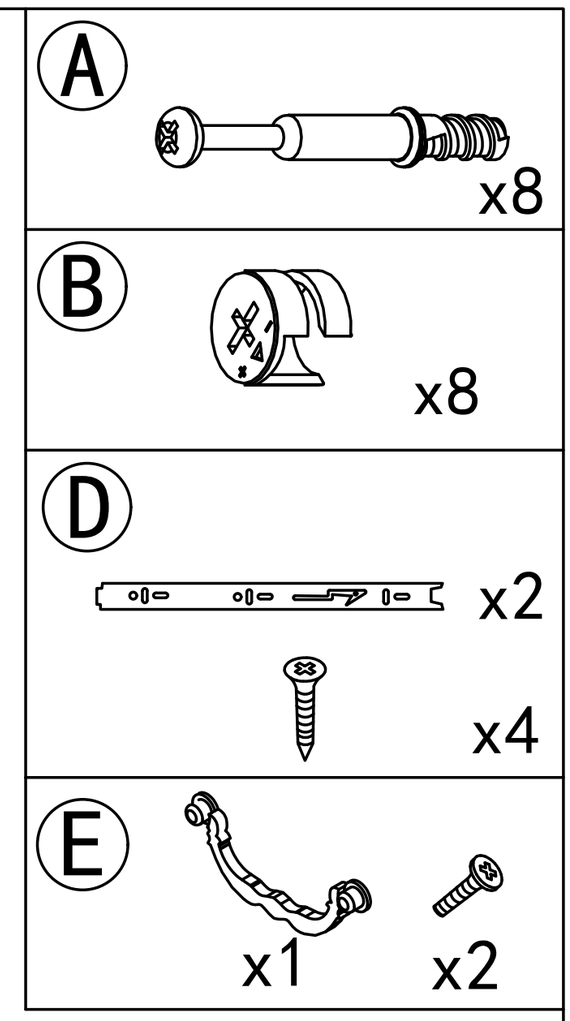

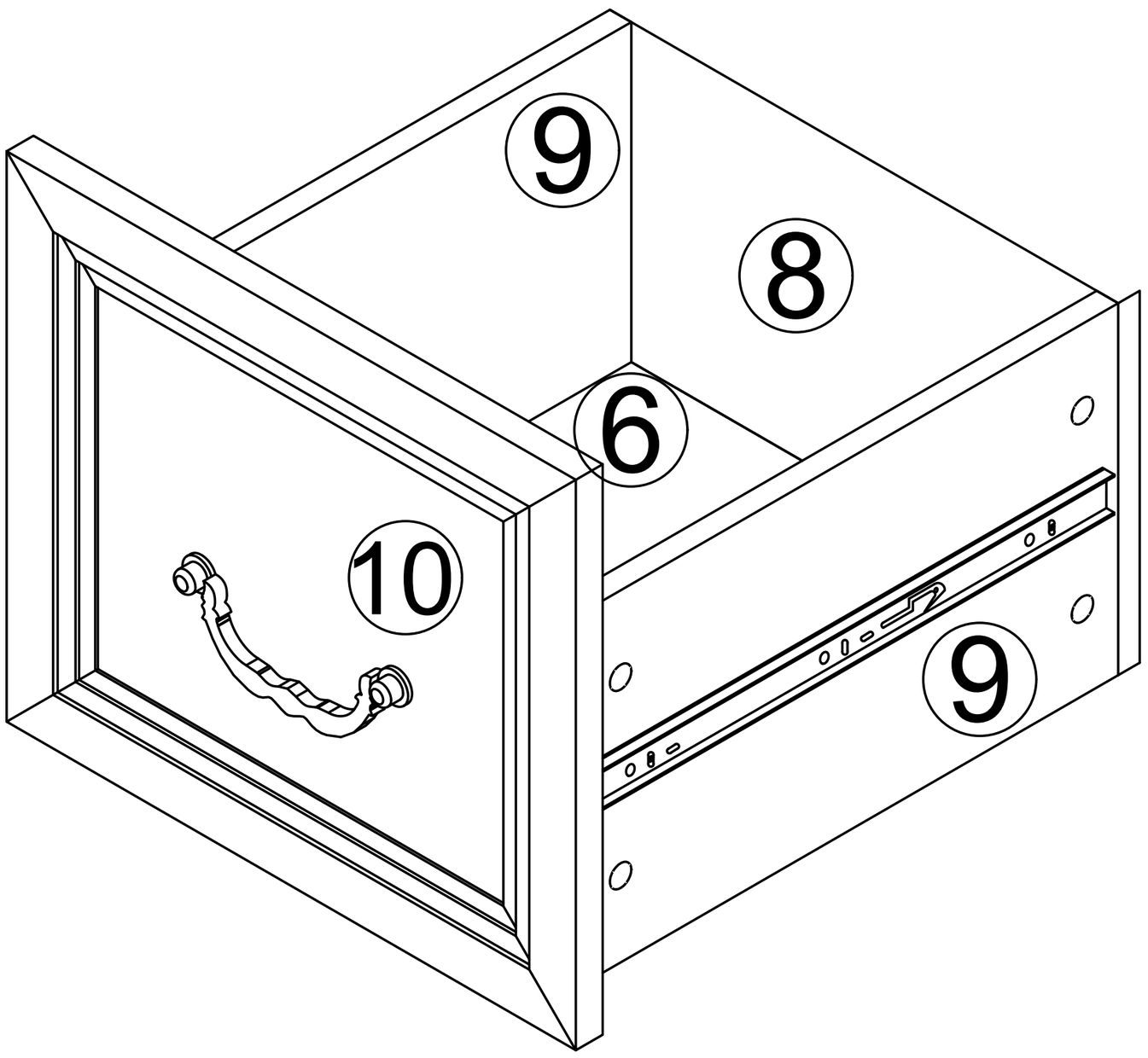

The installation method for the other drawer is the same

A	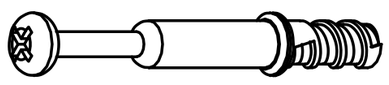	105pcs	B		105pcs	C		14pcs
D	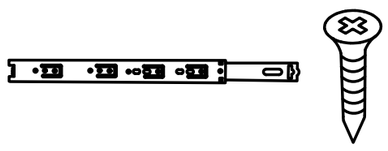	8pcs / 24pcs	F	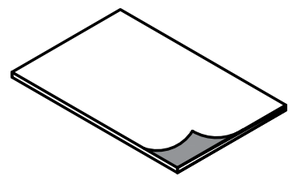	6pcs	H	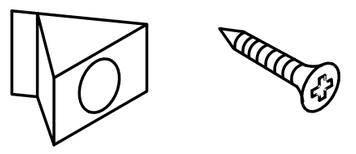	4pcs / 4pcs
I	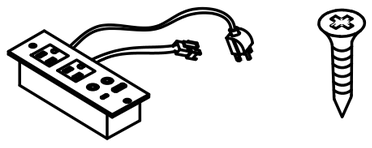	1pcs / 2pcs	J	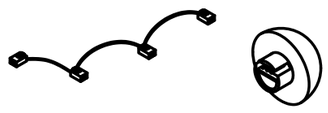	11pcs	K		1pcs / 2pcs
L		1pcs	M		1pcs / 1pcs	N	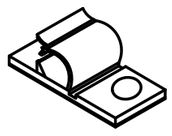	1pcs
O	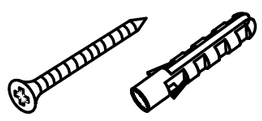	1pcs / 1pcs						

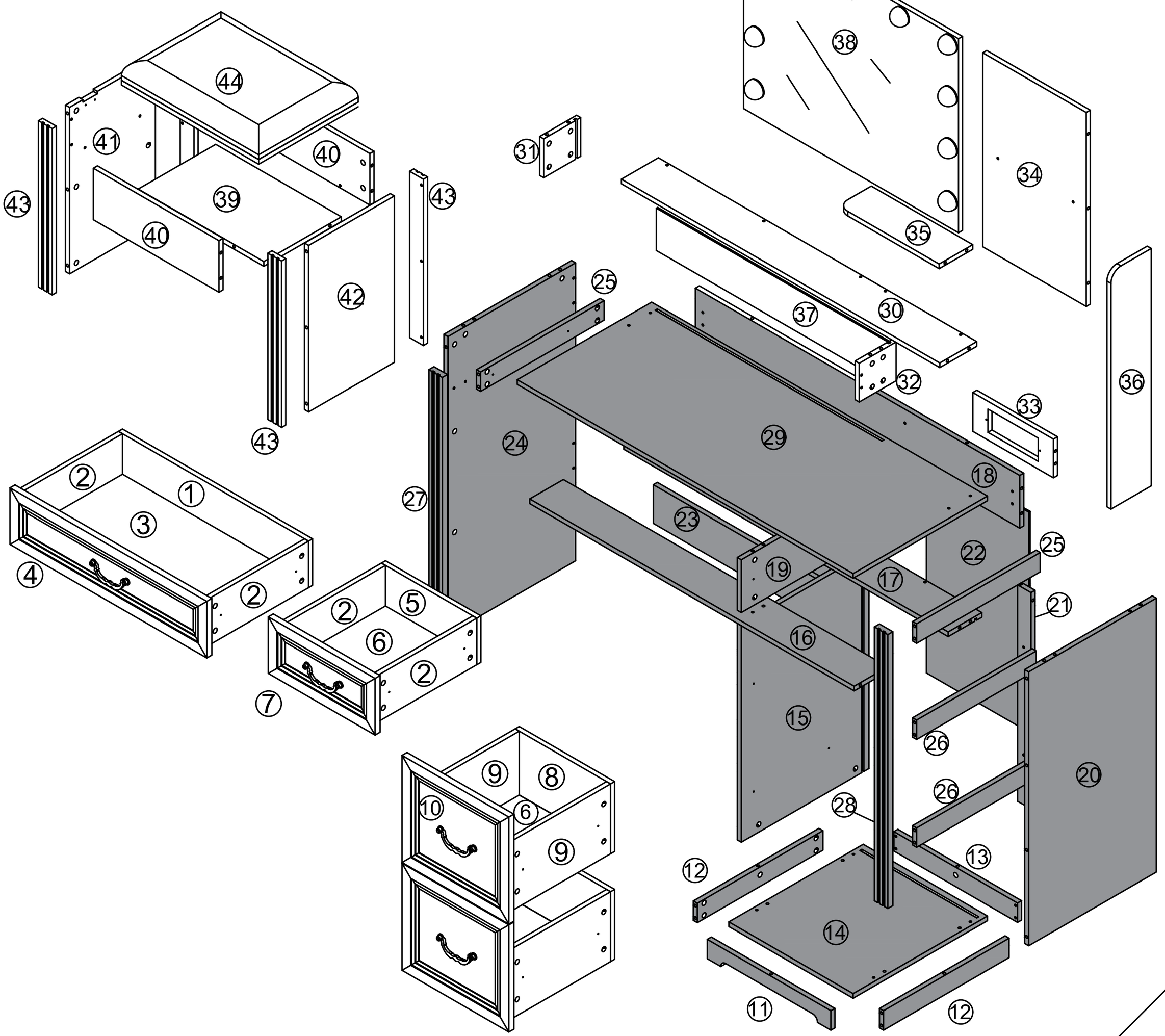

Step 26

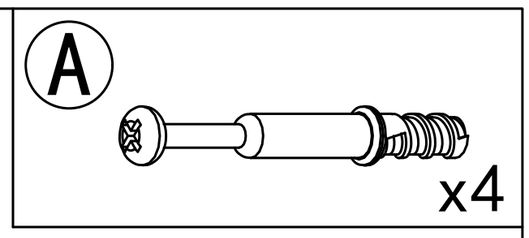

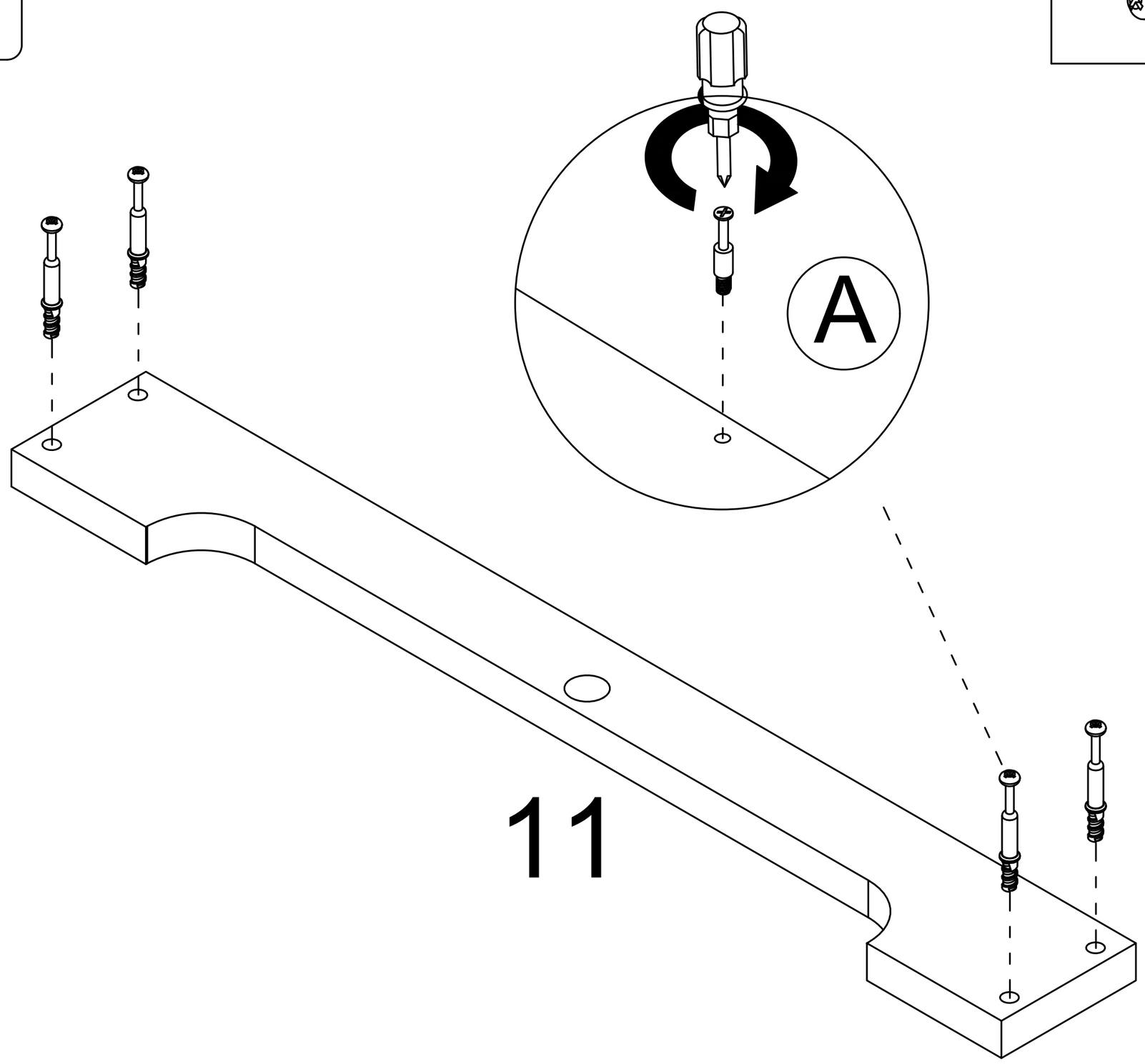

Step 27

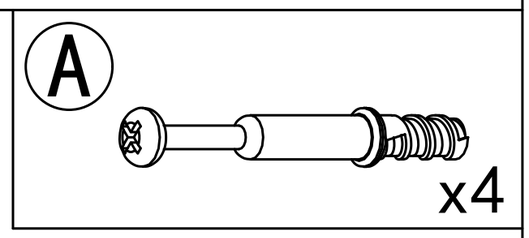

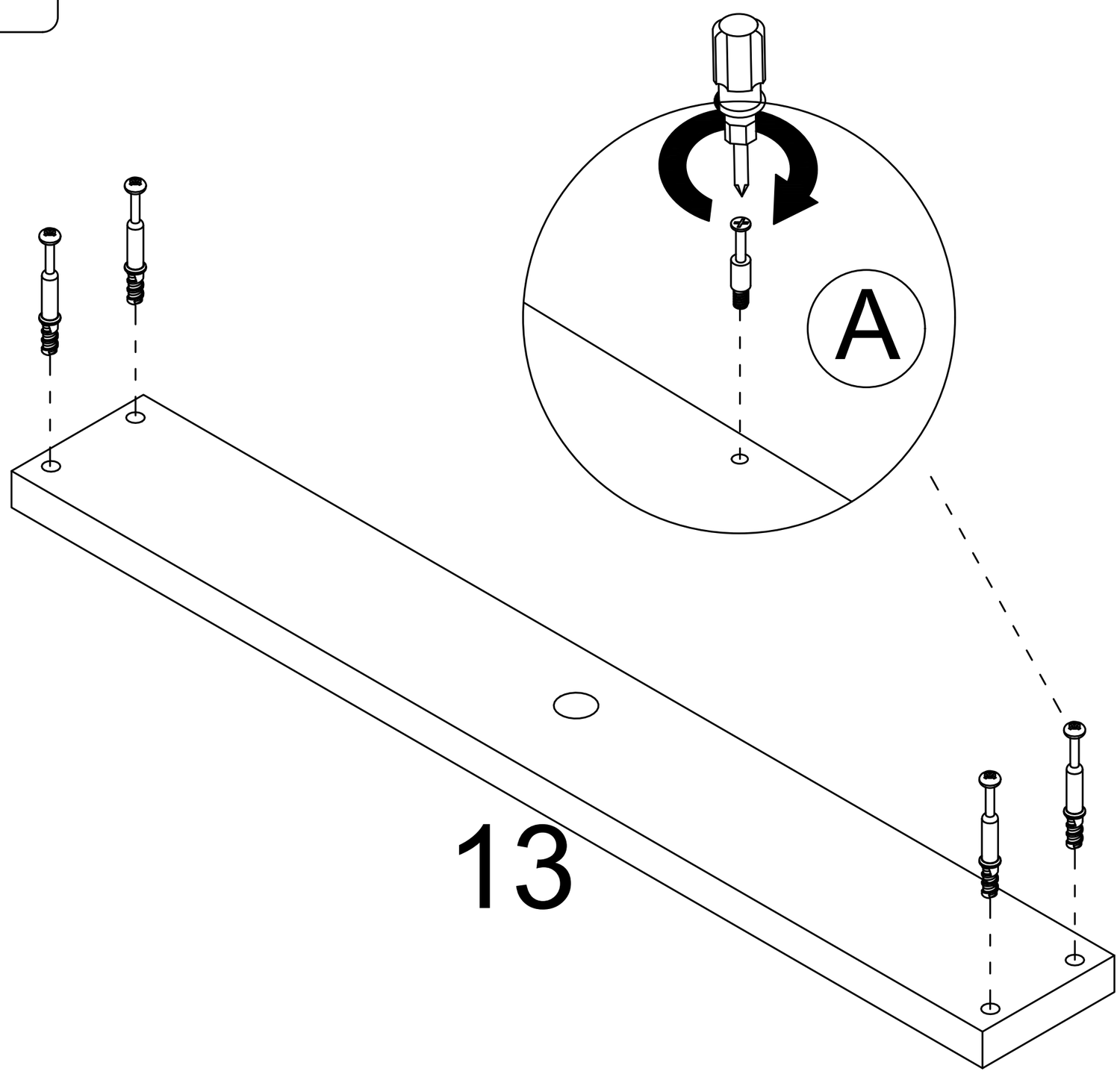

Step 28

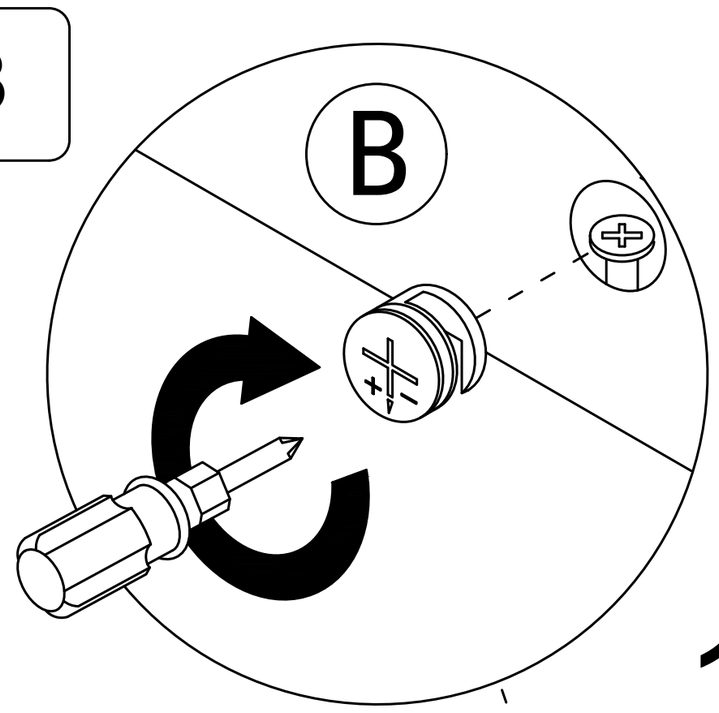

B x8

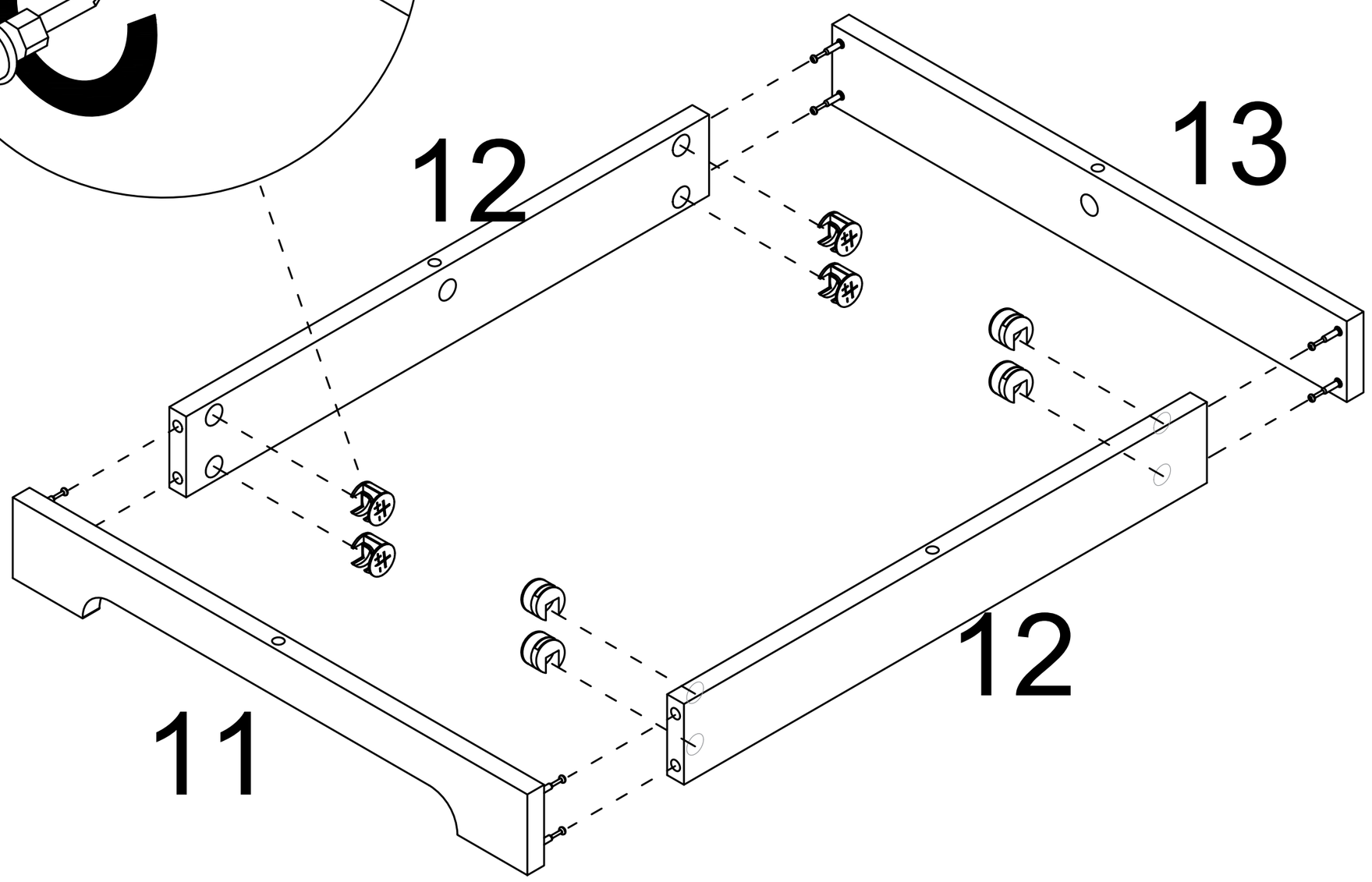

Step 29

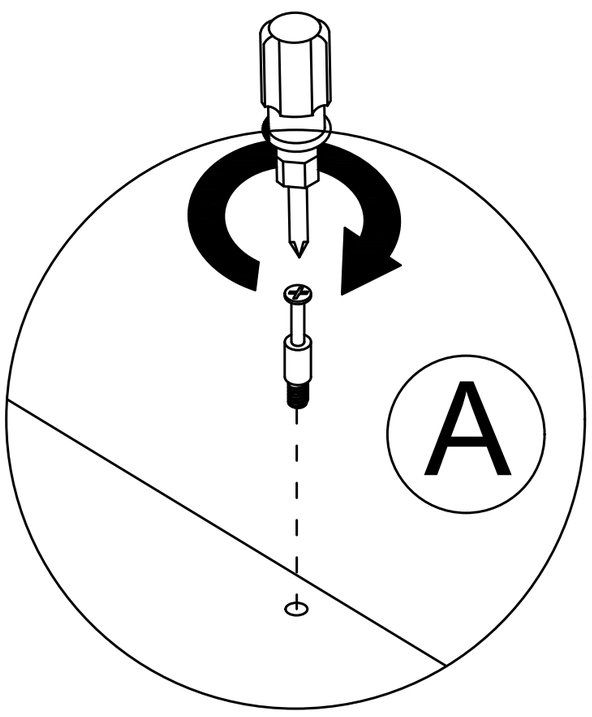

A x4

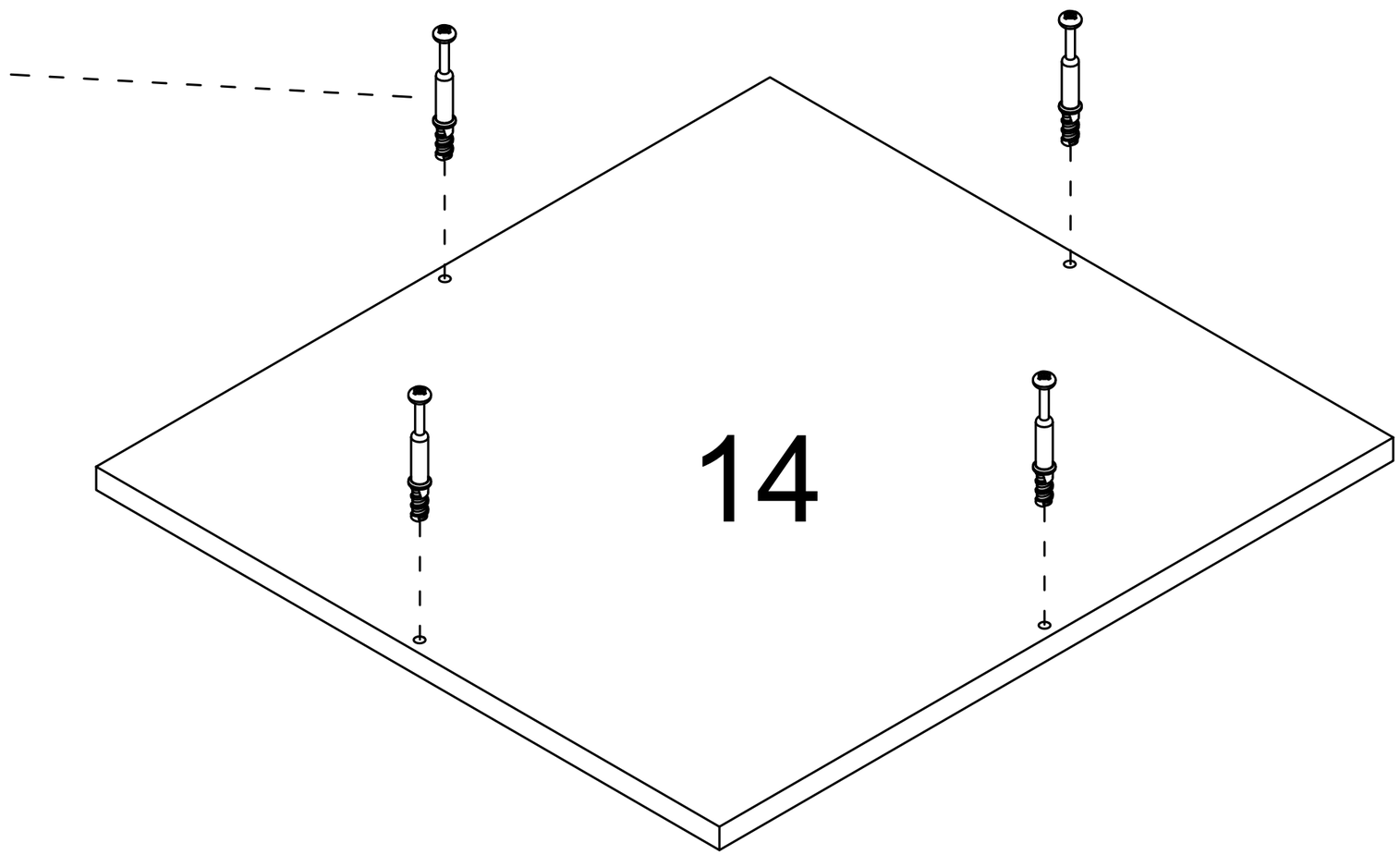

Step 30

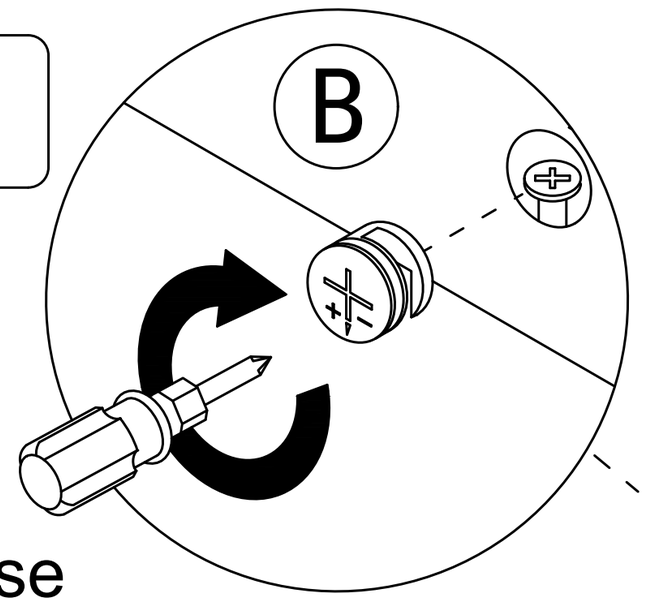

B x4

F x4

Tear off release paper and stick the black foot pad on the board

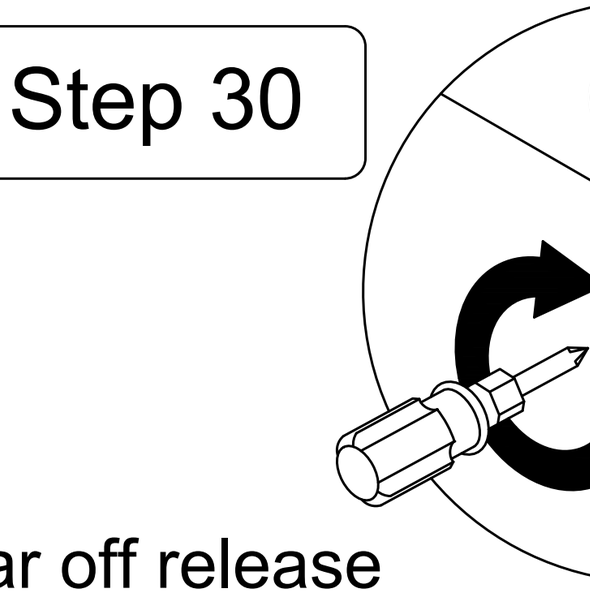

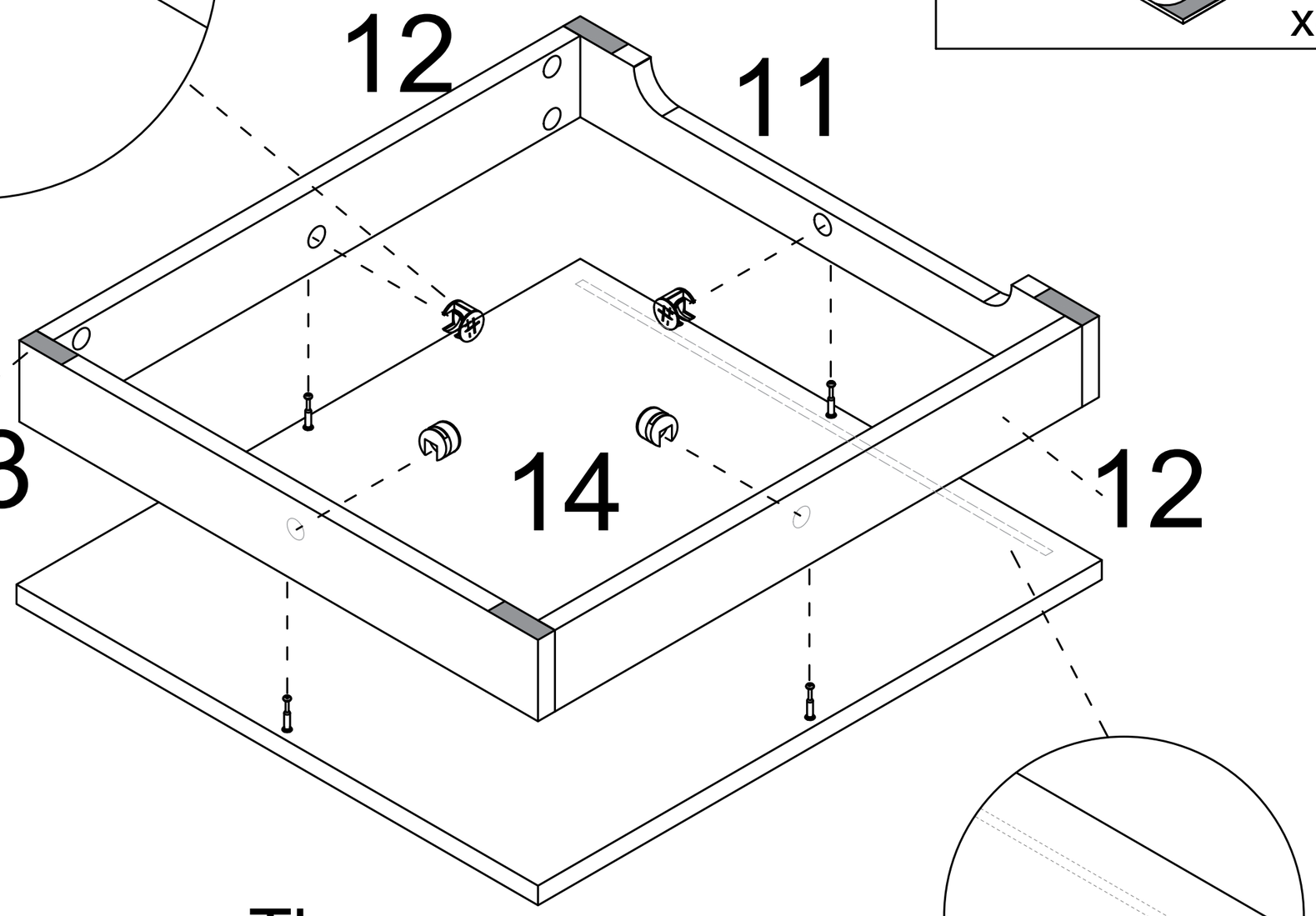

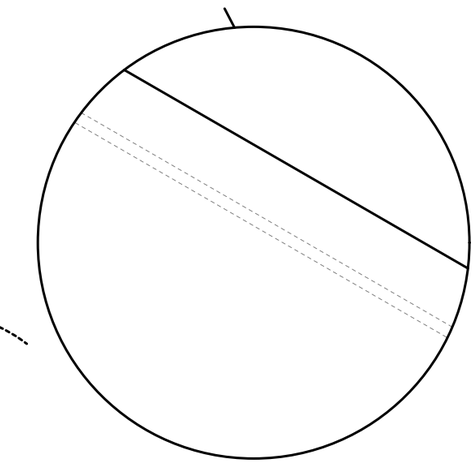

The ones with grooves are at the back

Step 31

A x4

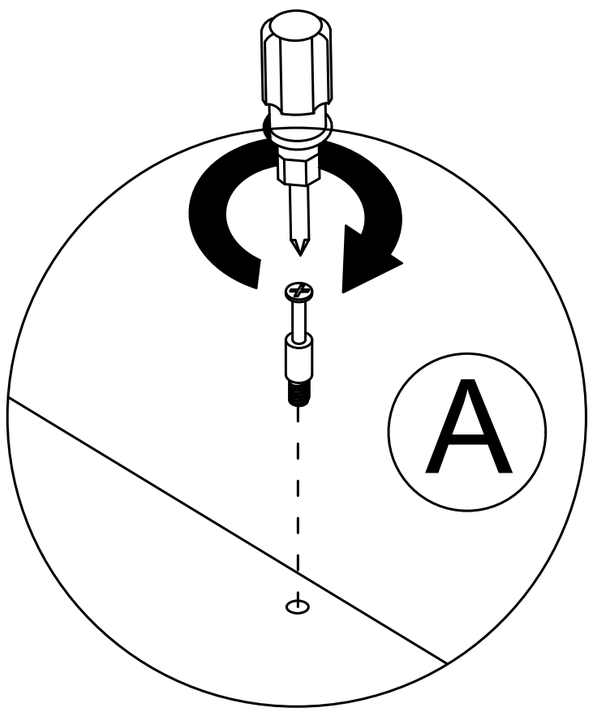

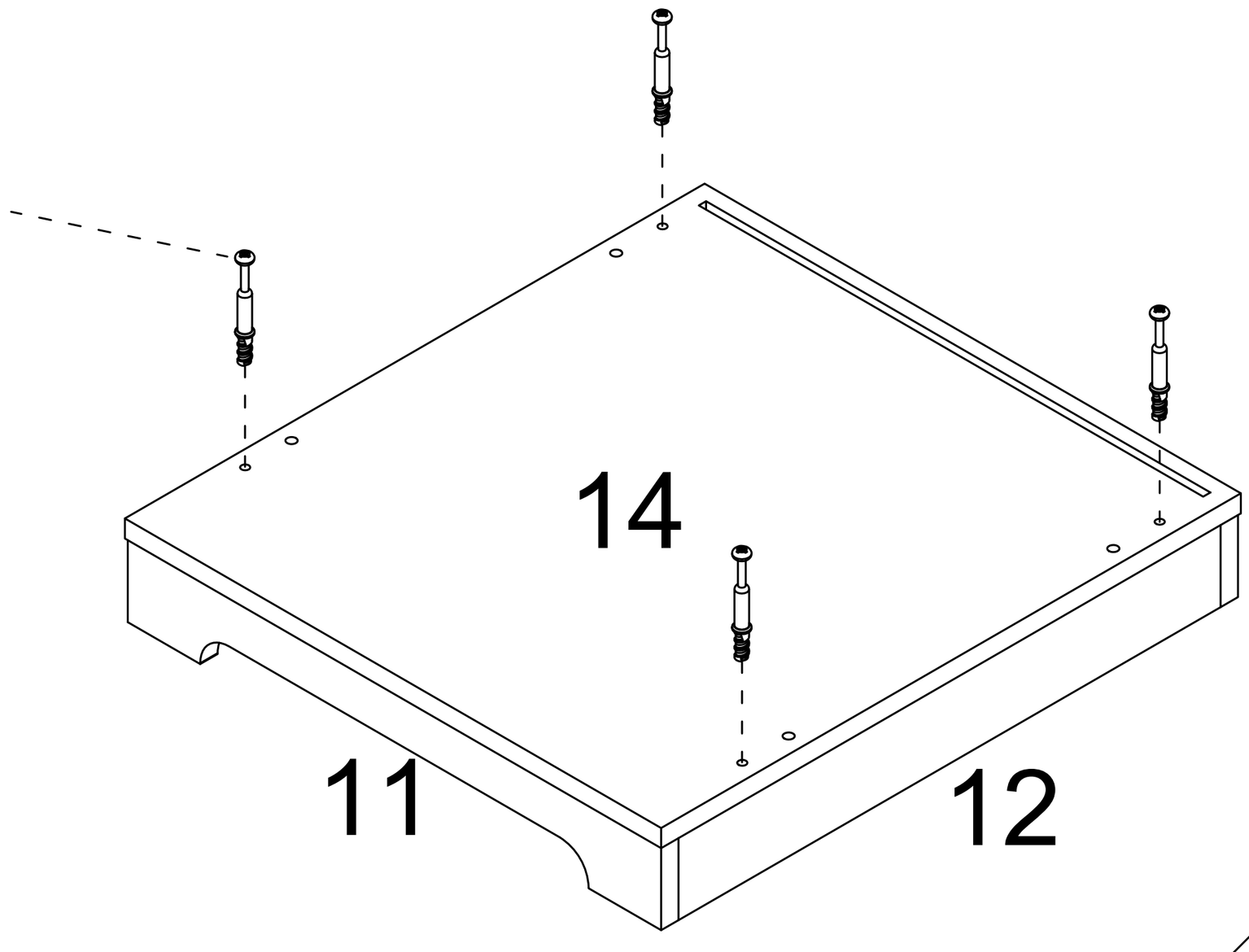

Step 32

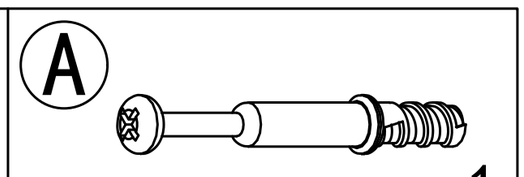

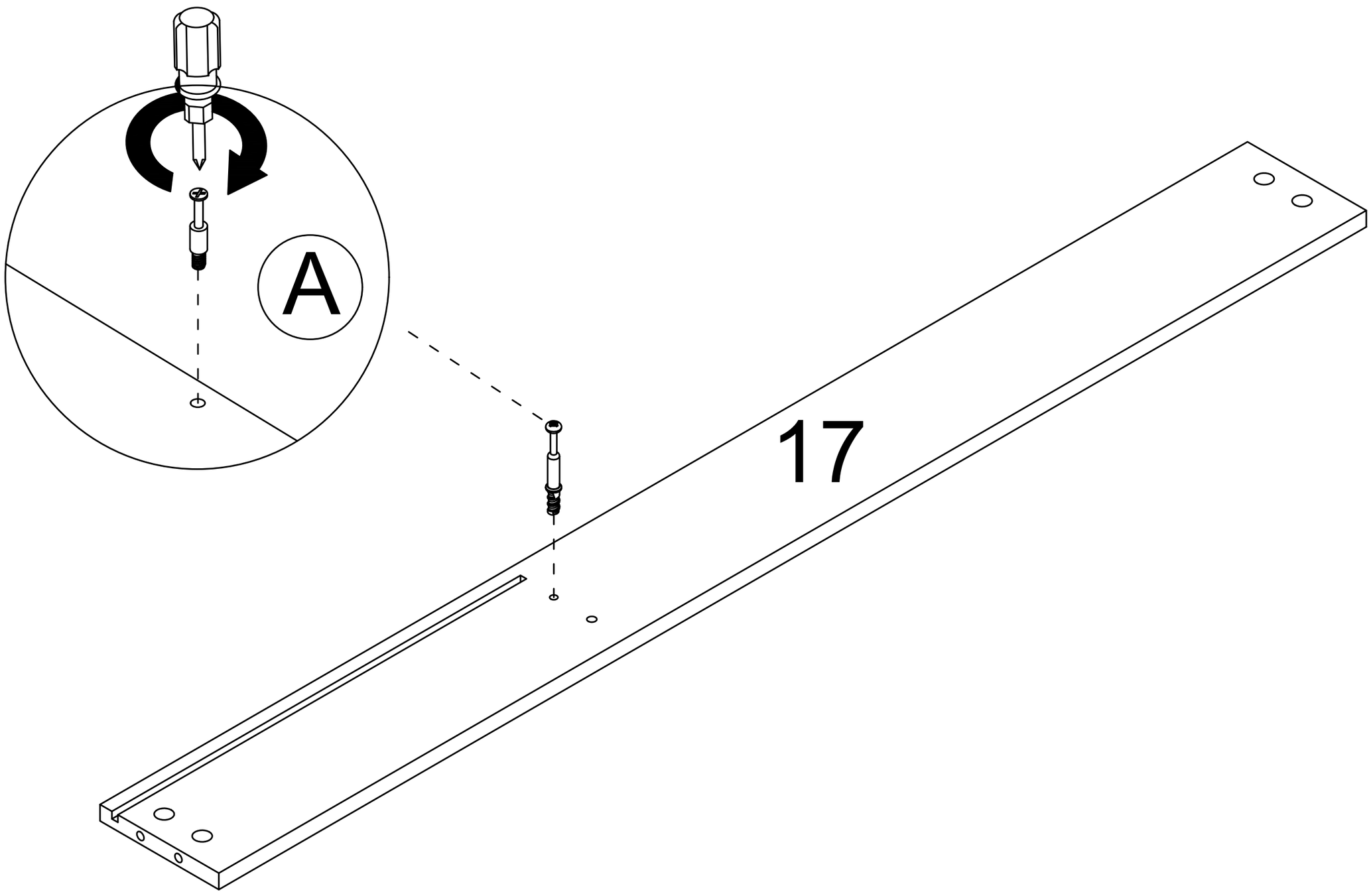

Step 33

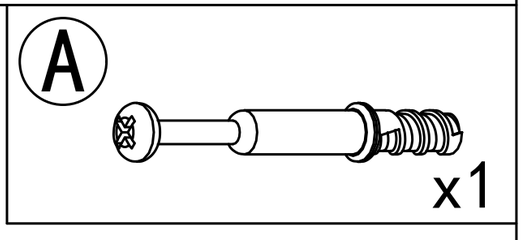

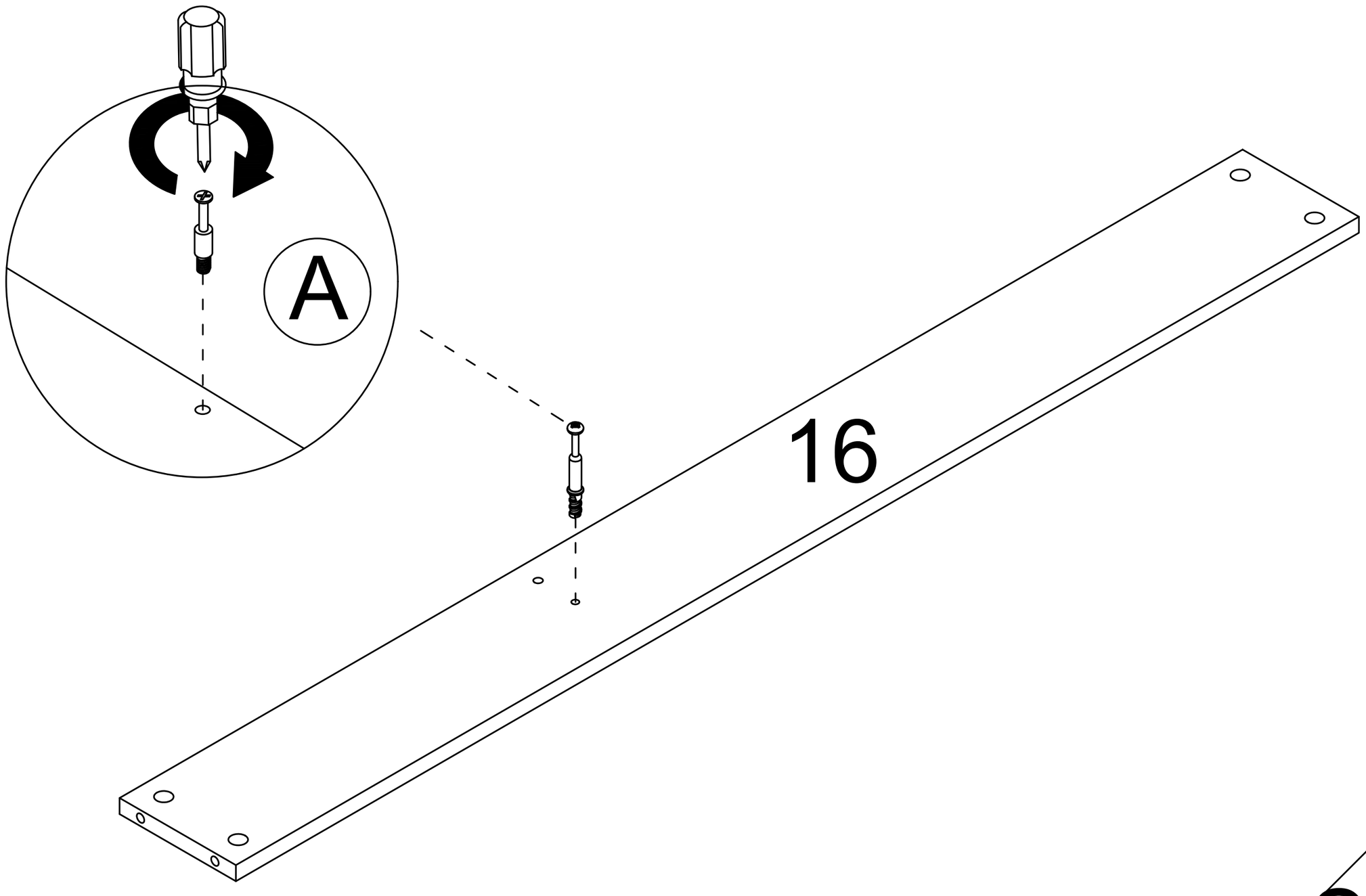

Step 34

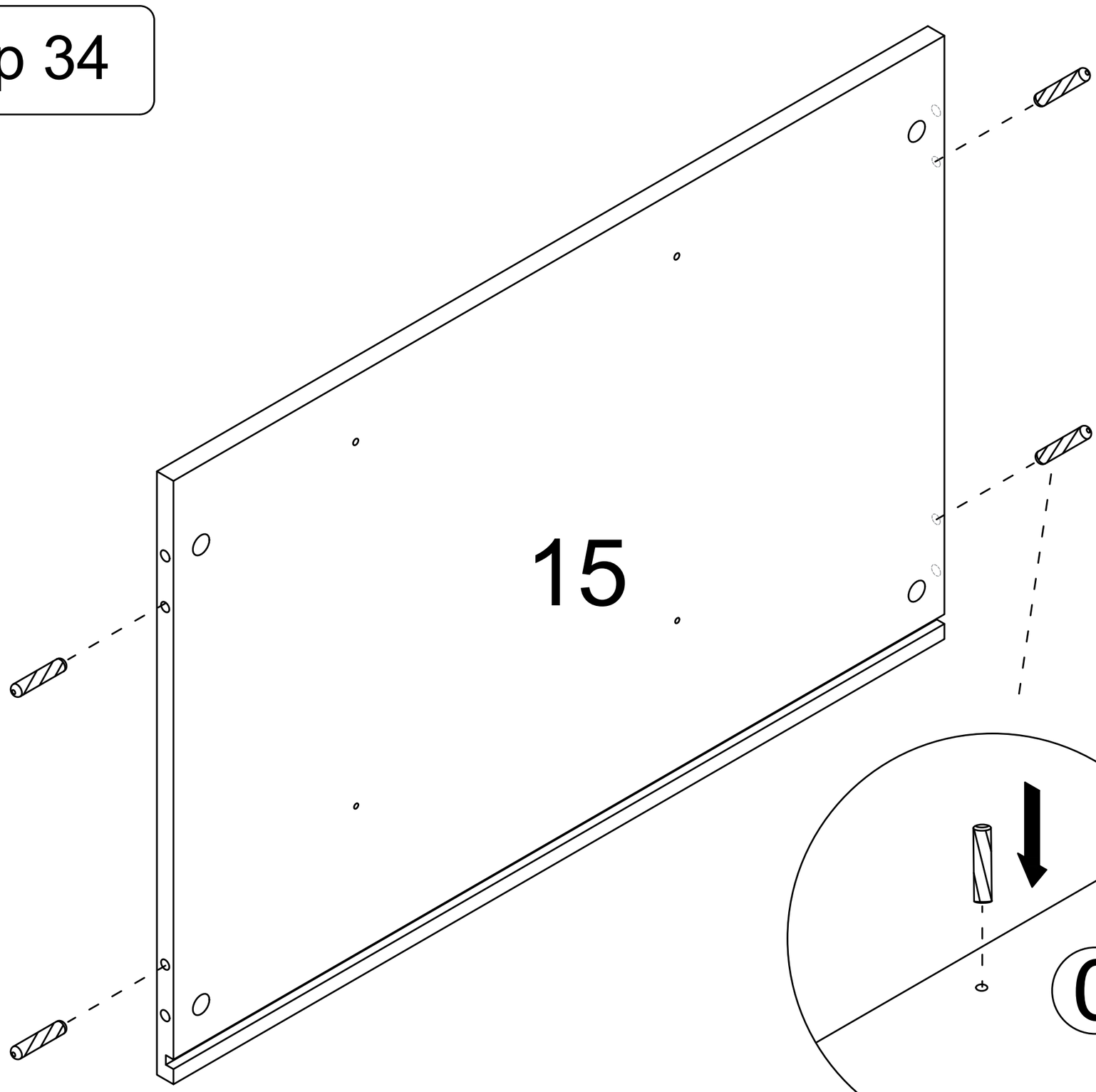

C

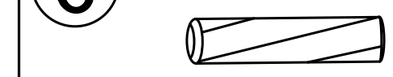

x4

Step 35

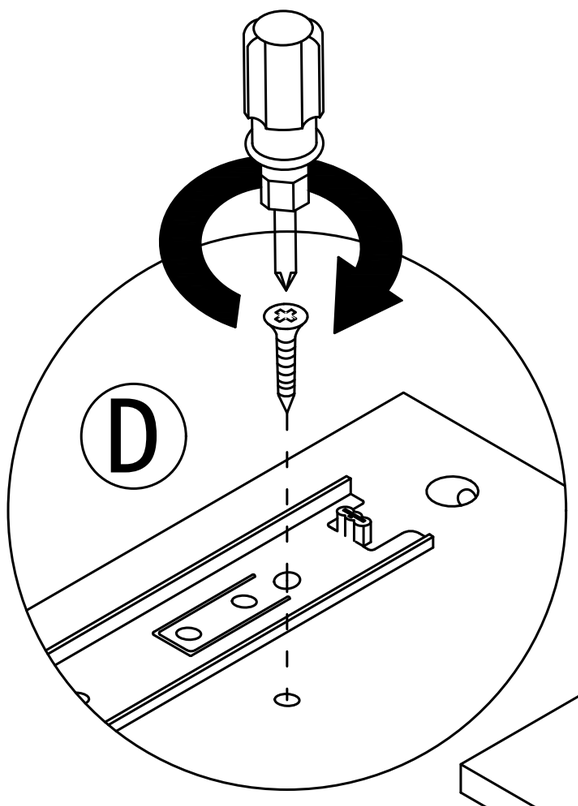

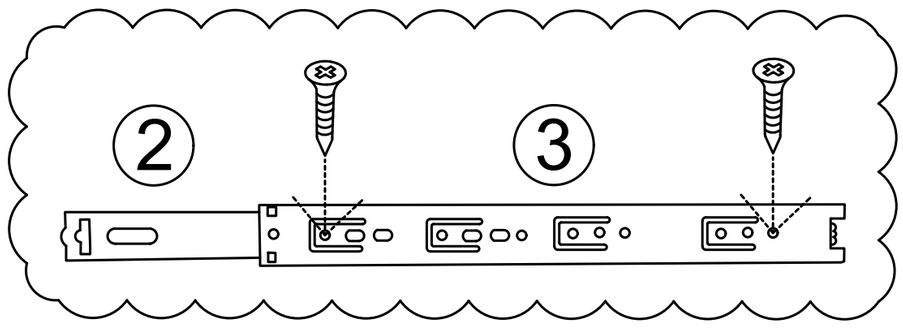

D

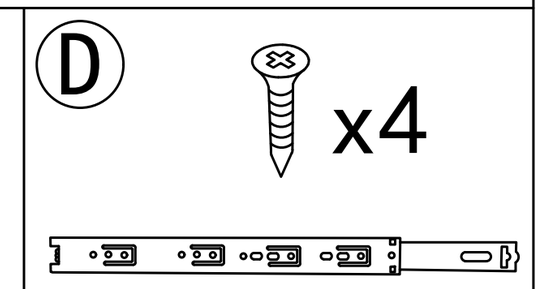

x4

x2

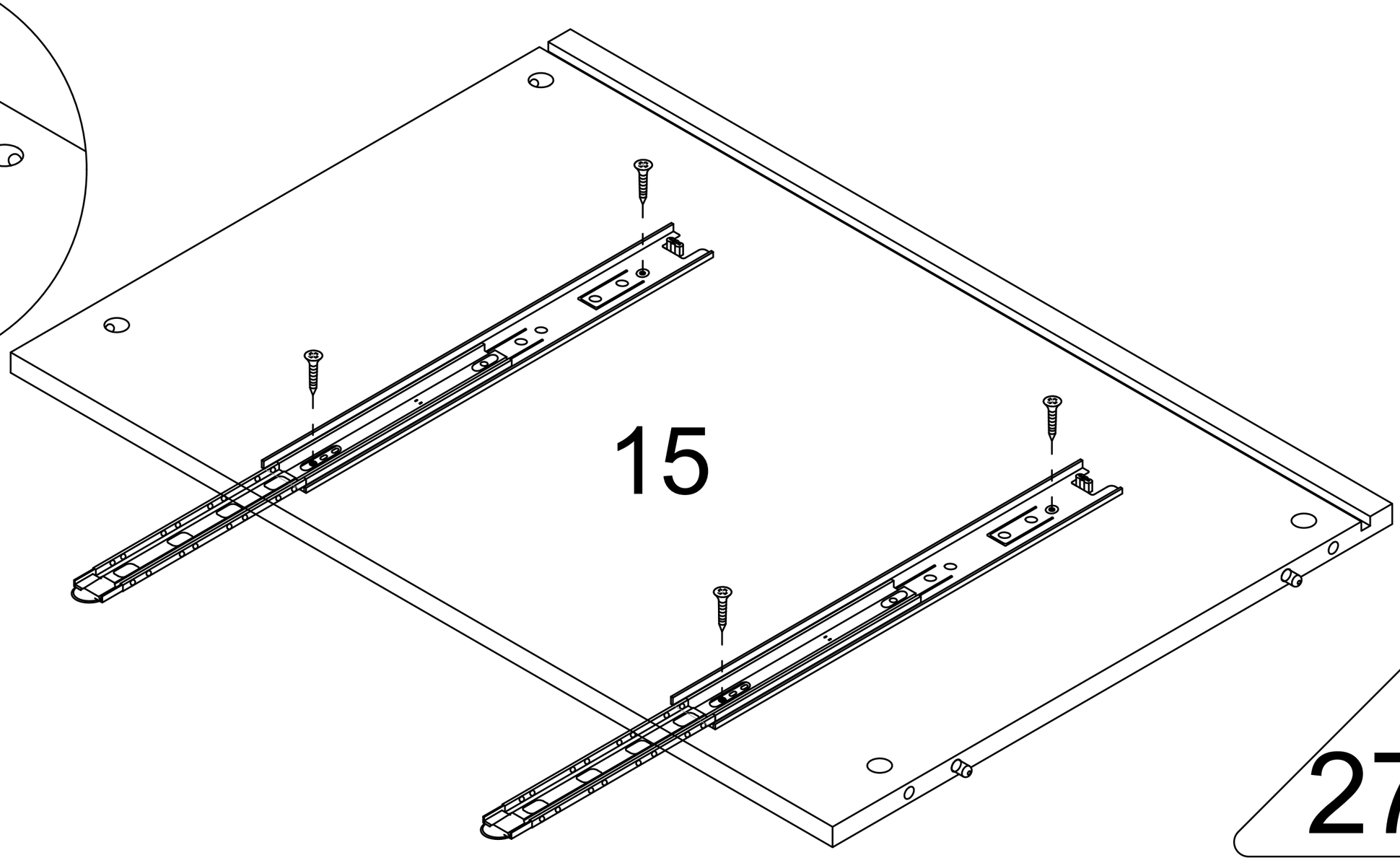

Step 36

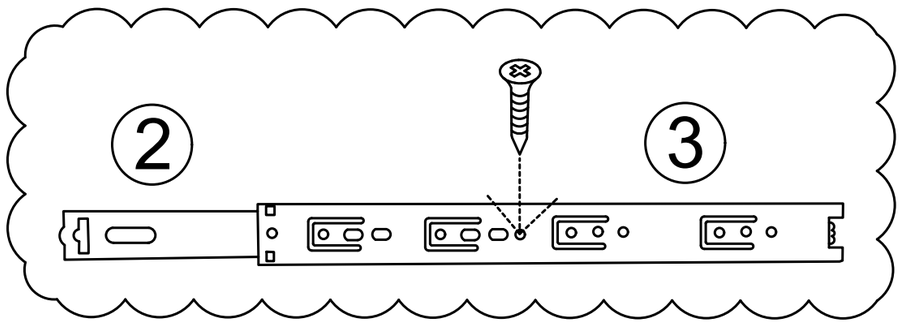

D x2

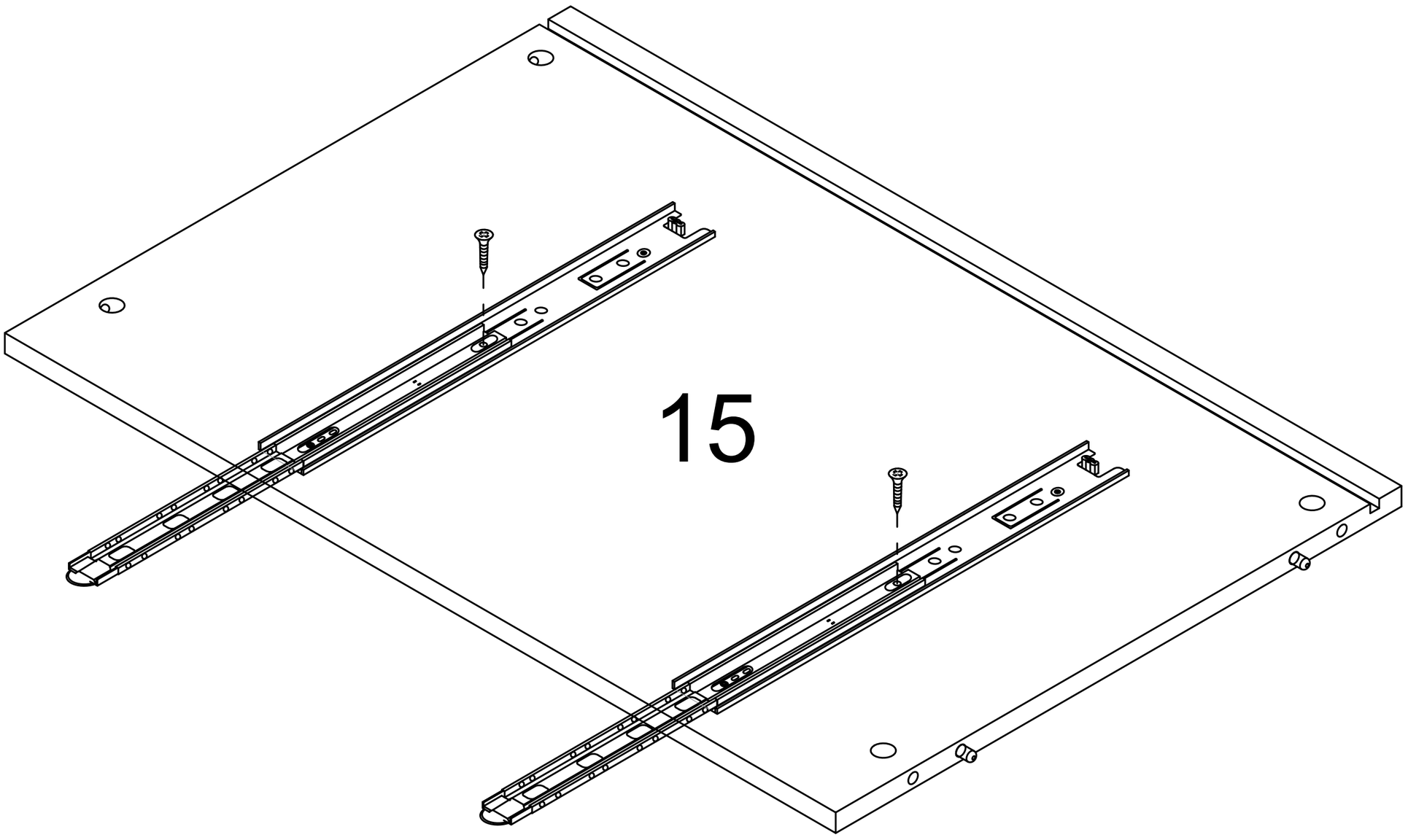

This hole is for strengthening fixed hole customers can choose to install according to their needs.

Step 37

B x2

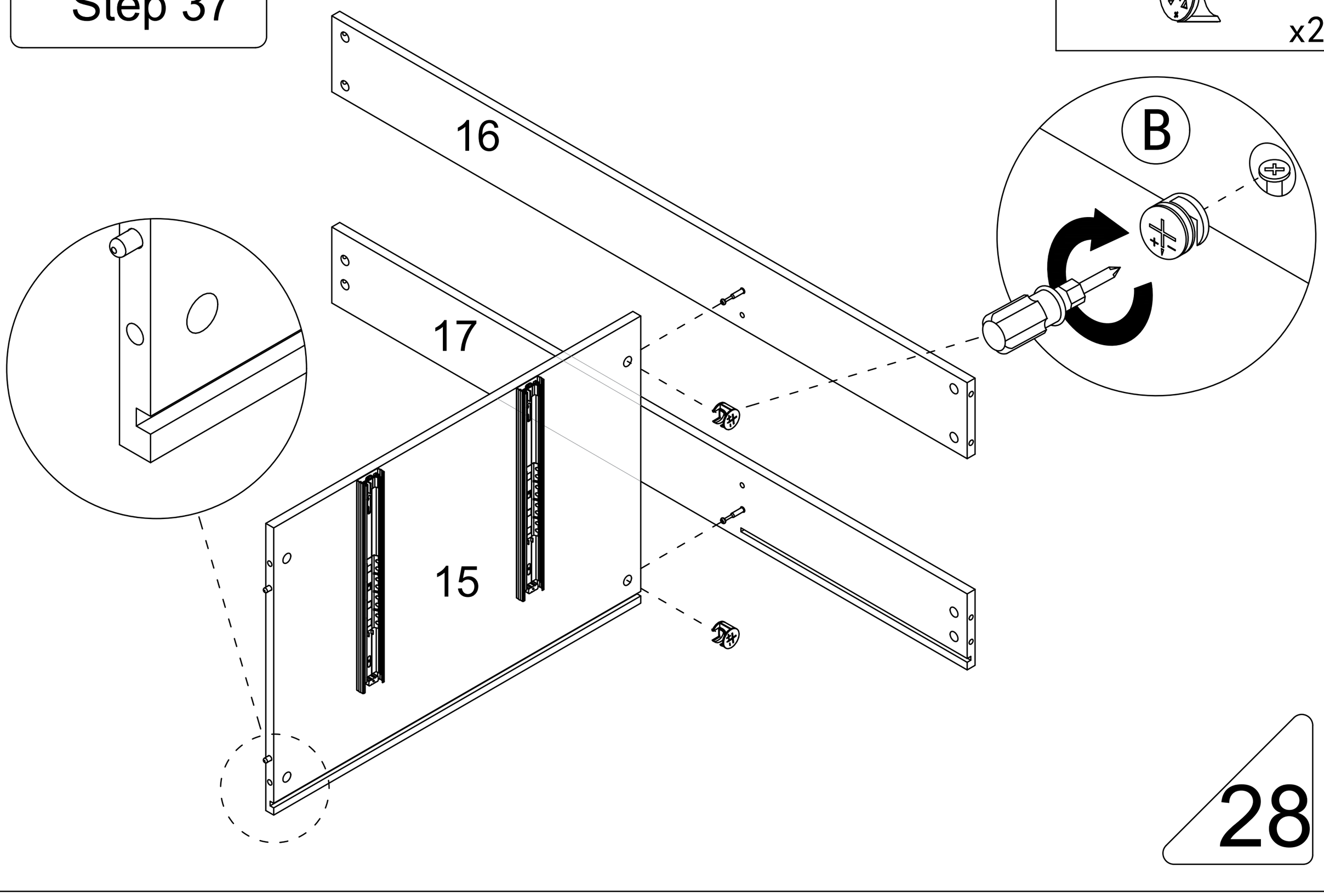

Step 38

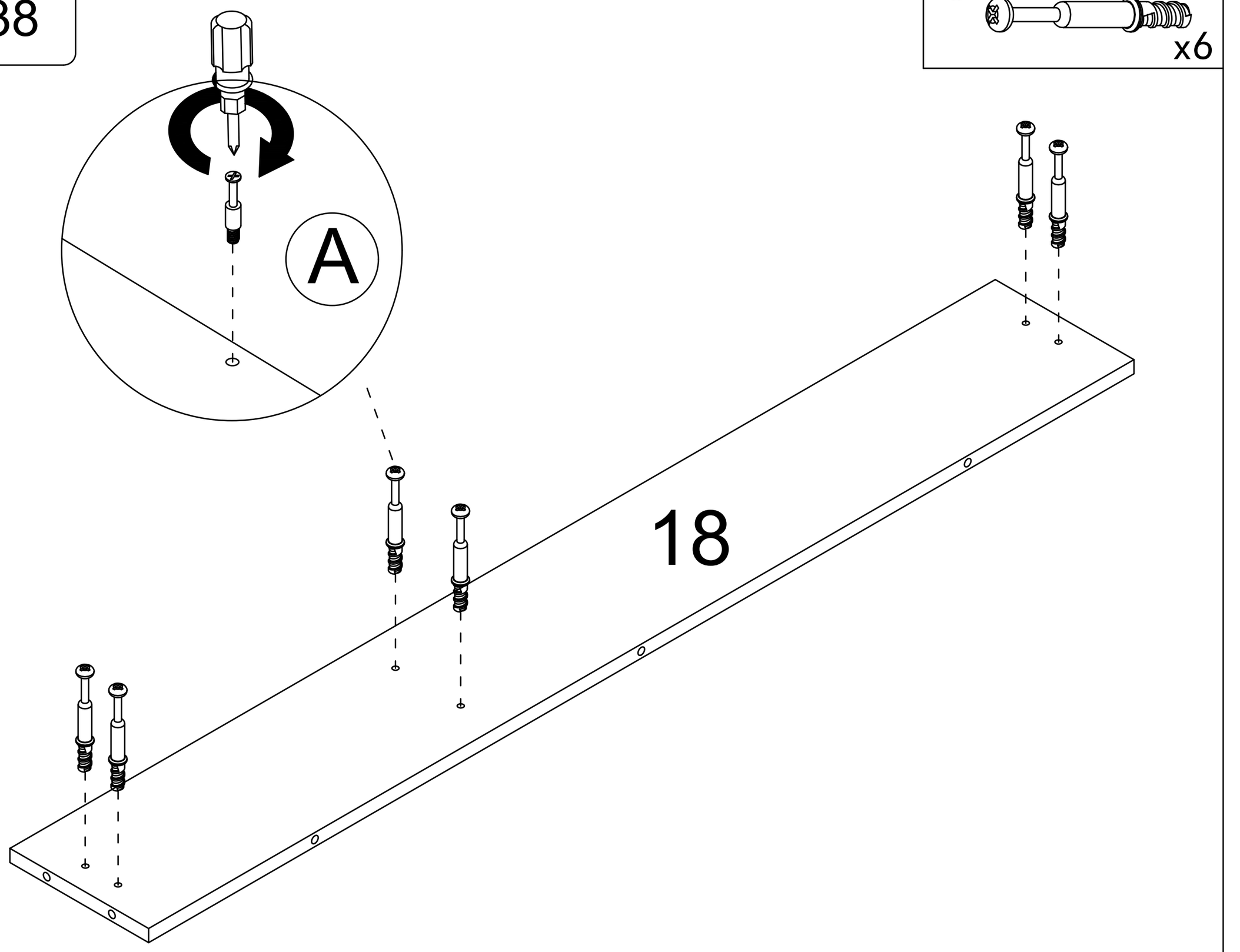

Step 39

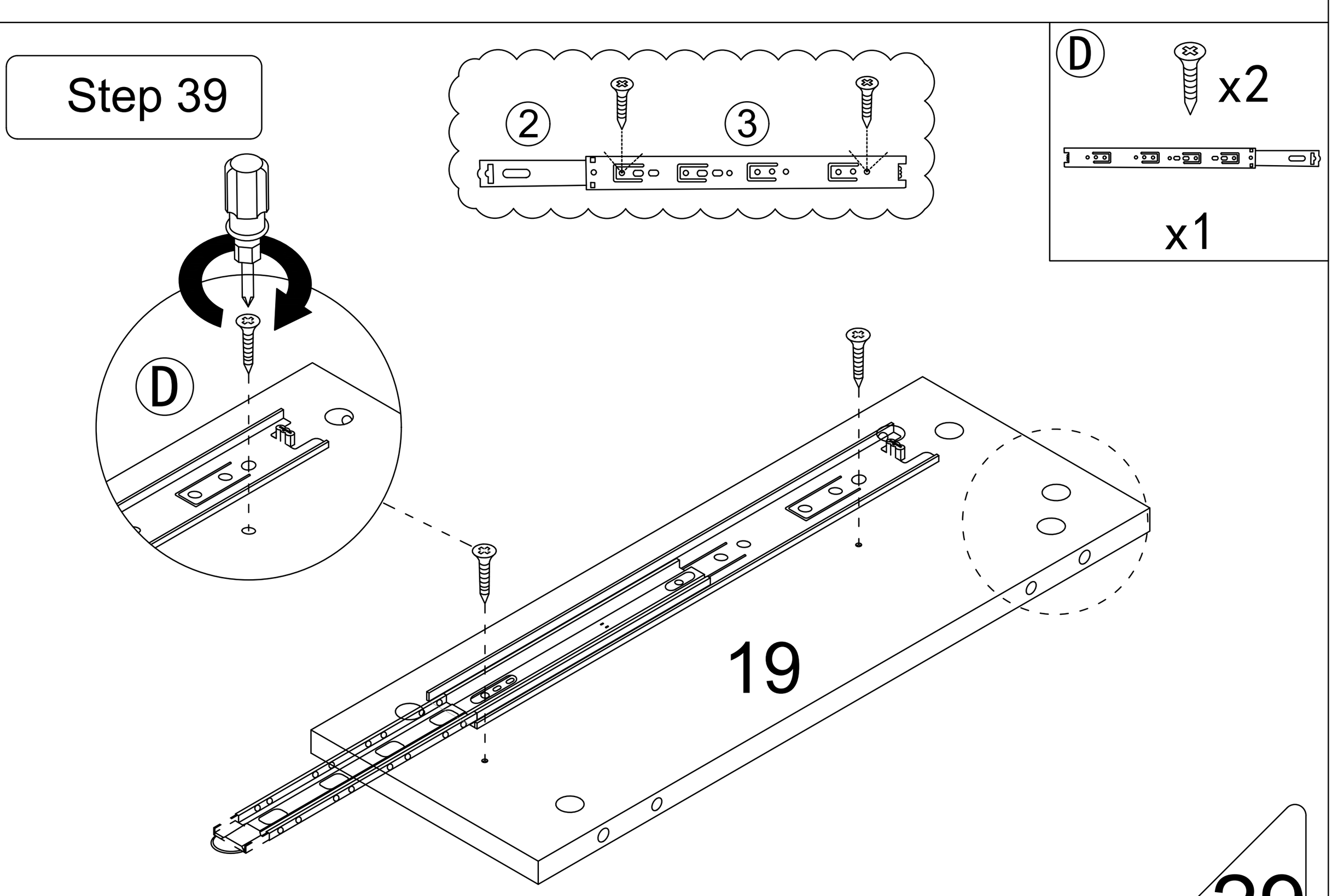

On the right side of the No. 19 plate, pay attention to the direction when installing

Step 40

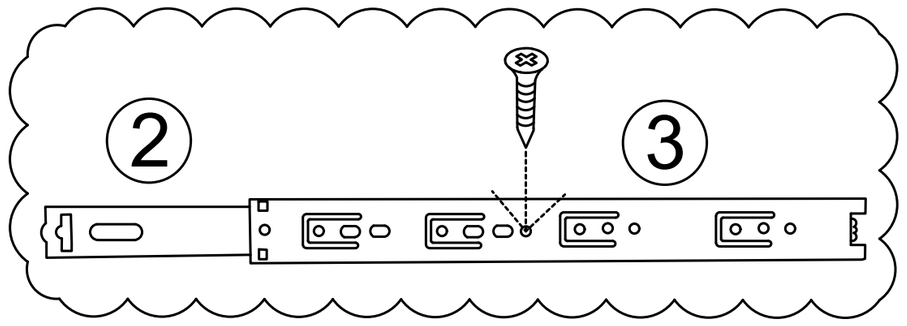

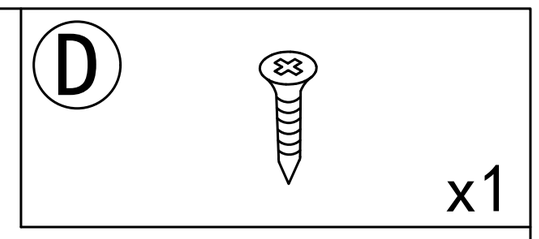

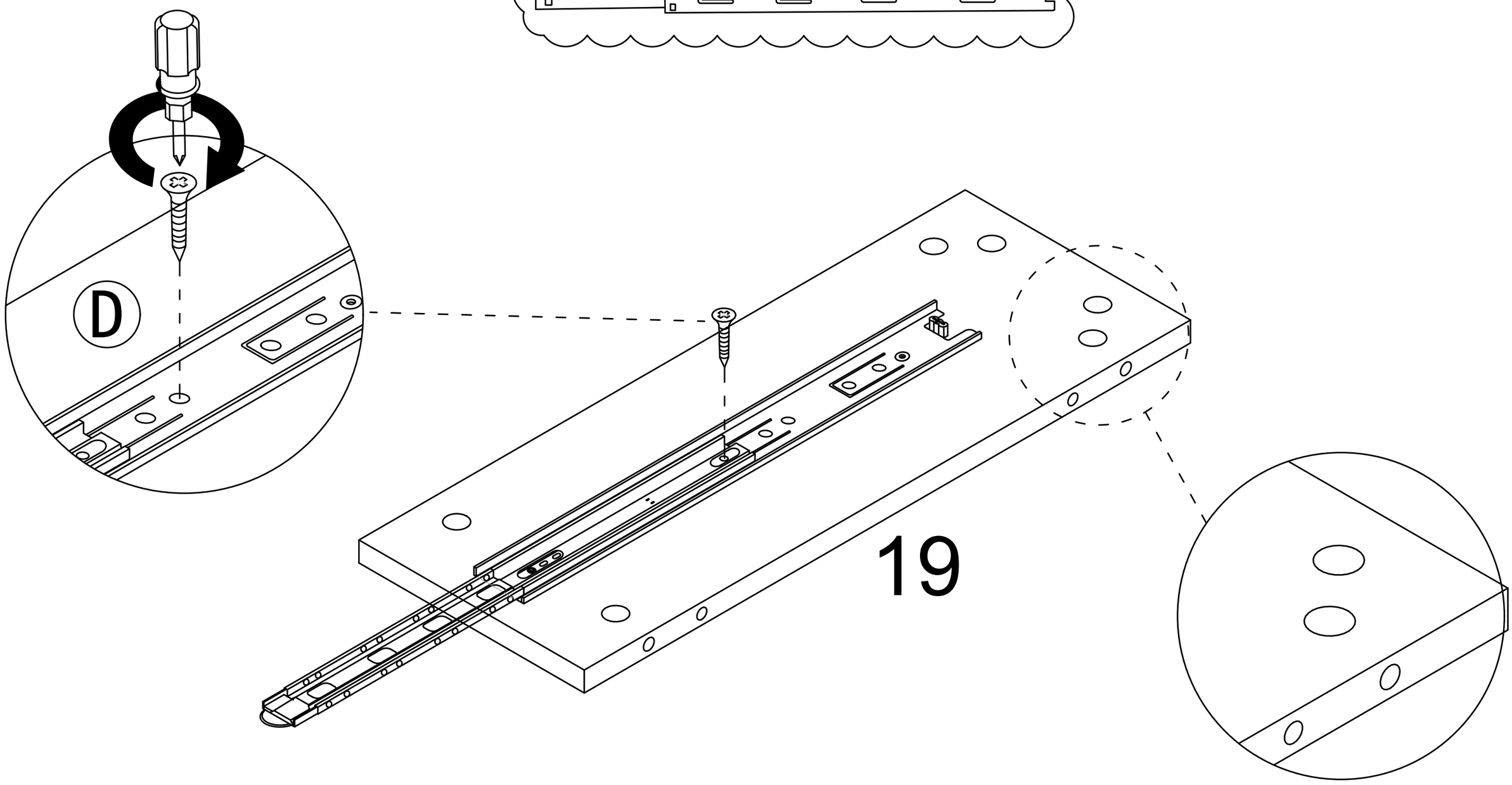

On the right side of the No. 19 plate, pay attention to the direction when installing

Step 41

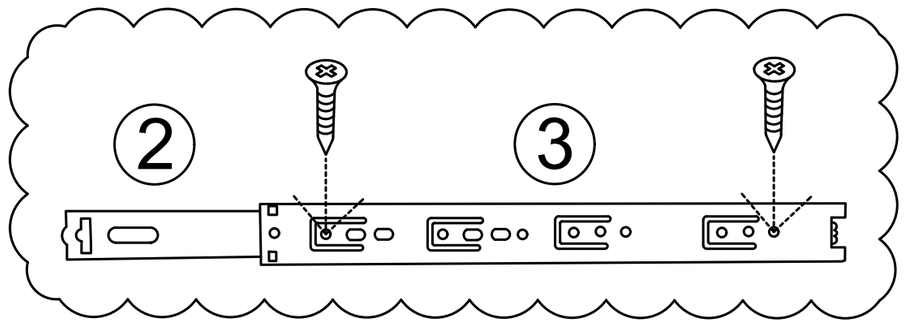

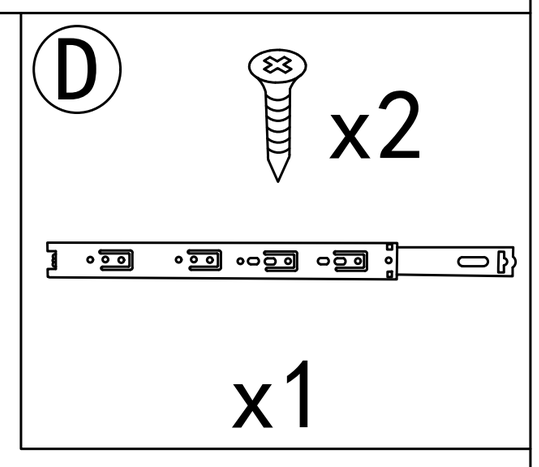

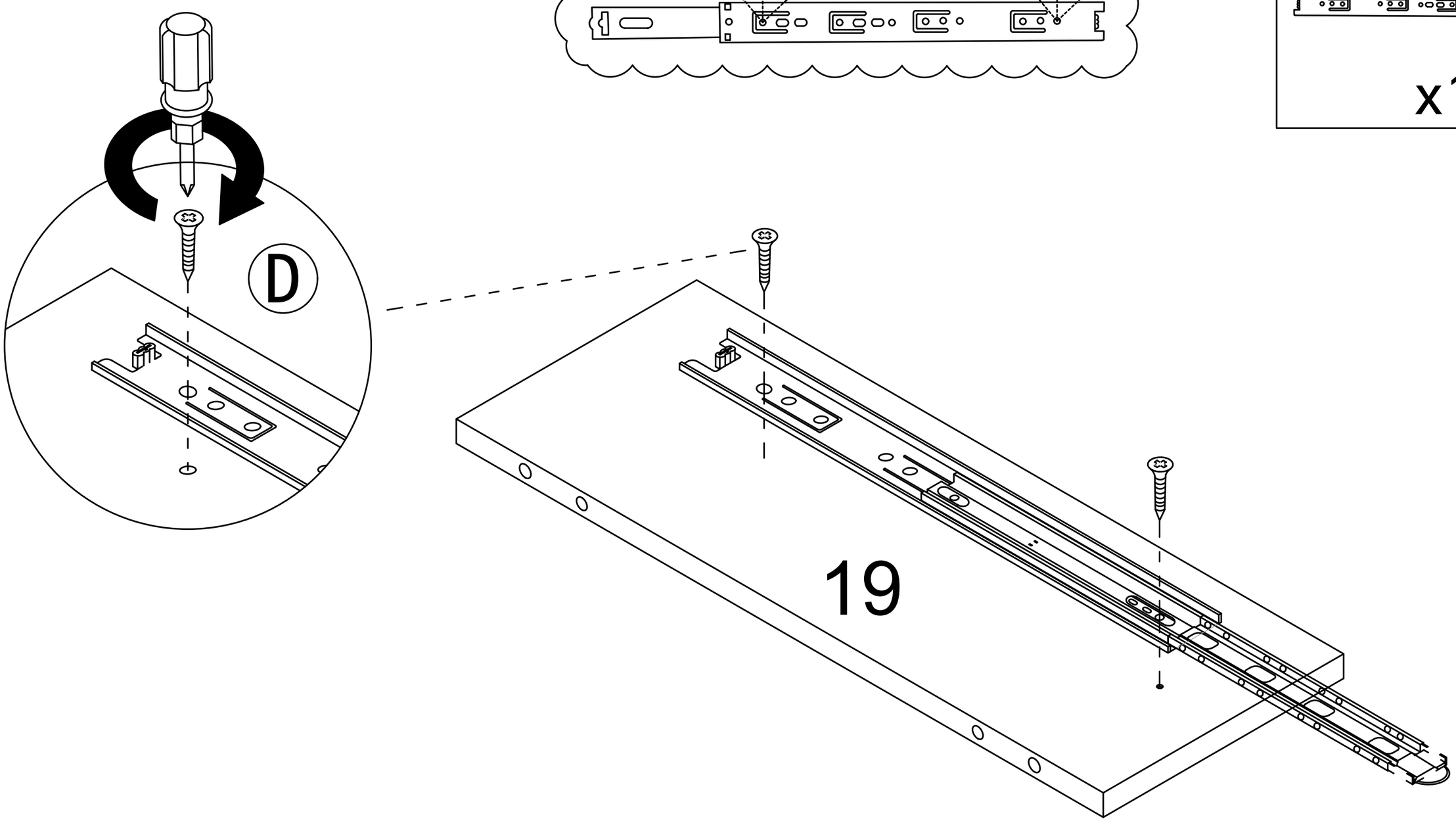

On the left side of the No. 19 plate, pay attention to the direction when installing

Step 42

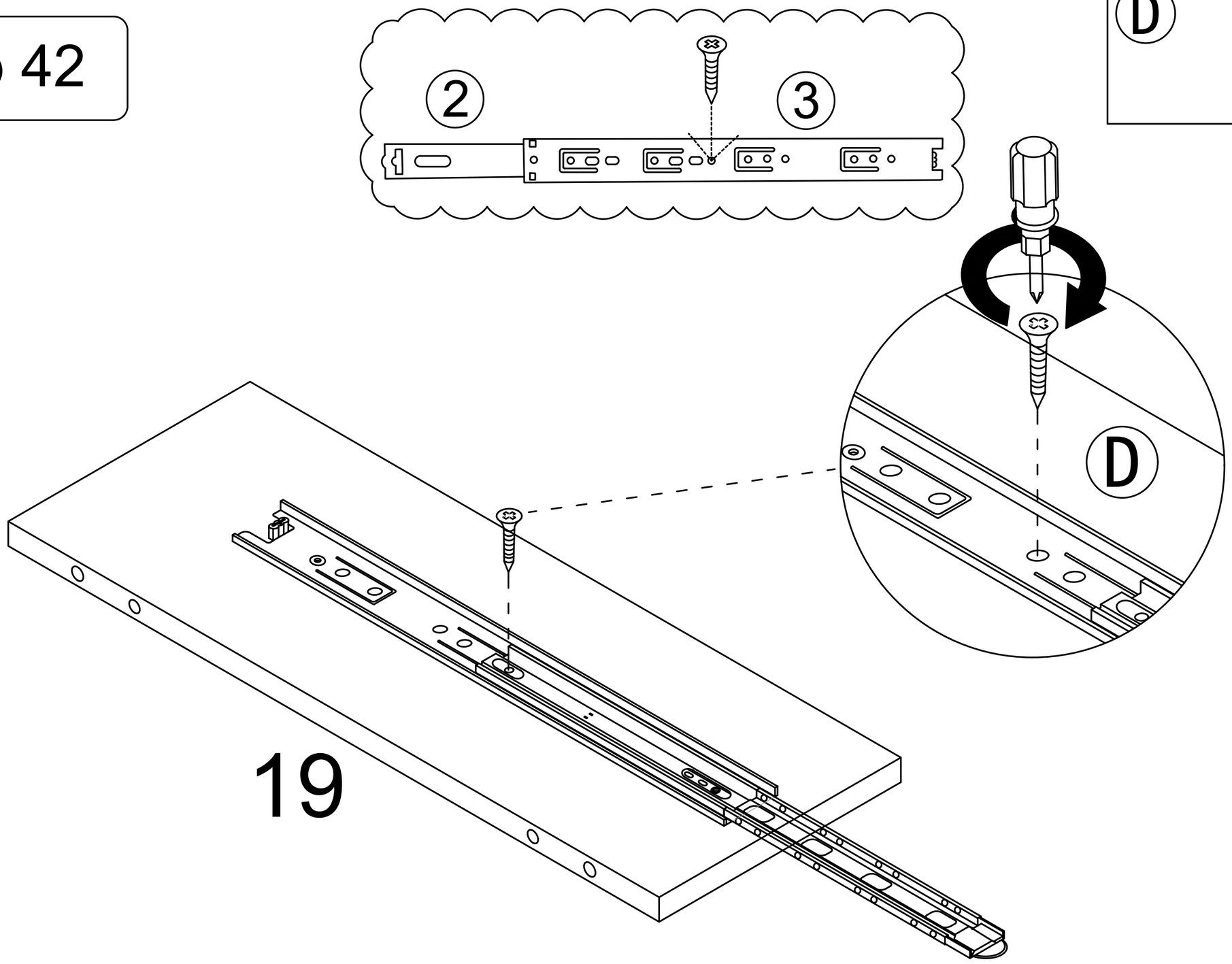

On the left side of the No. 19 plate, pay attention to the direction when installing

Step 43

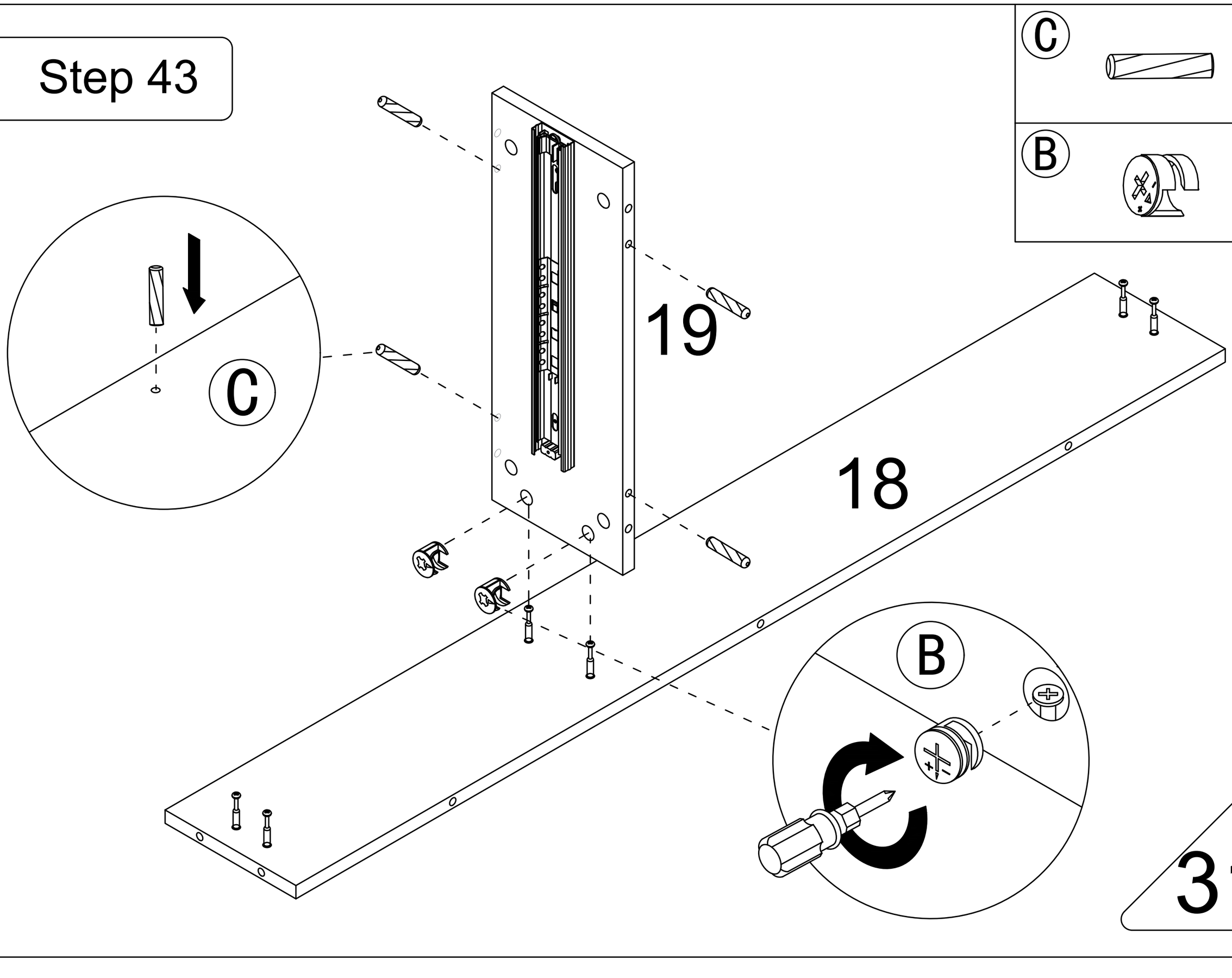

Step 44

A x5

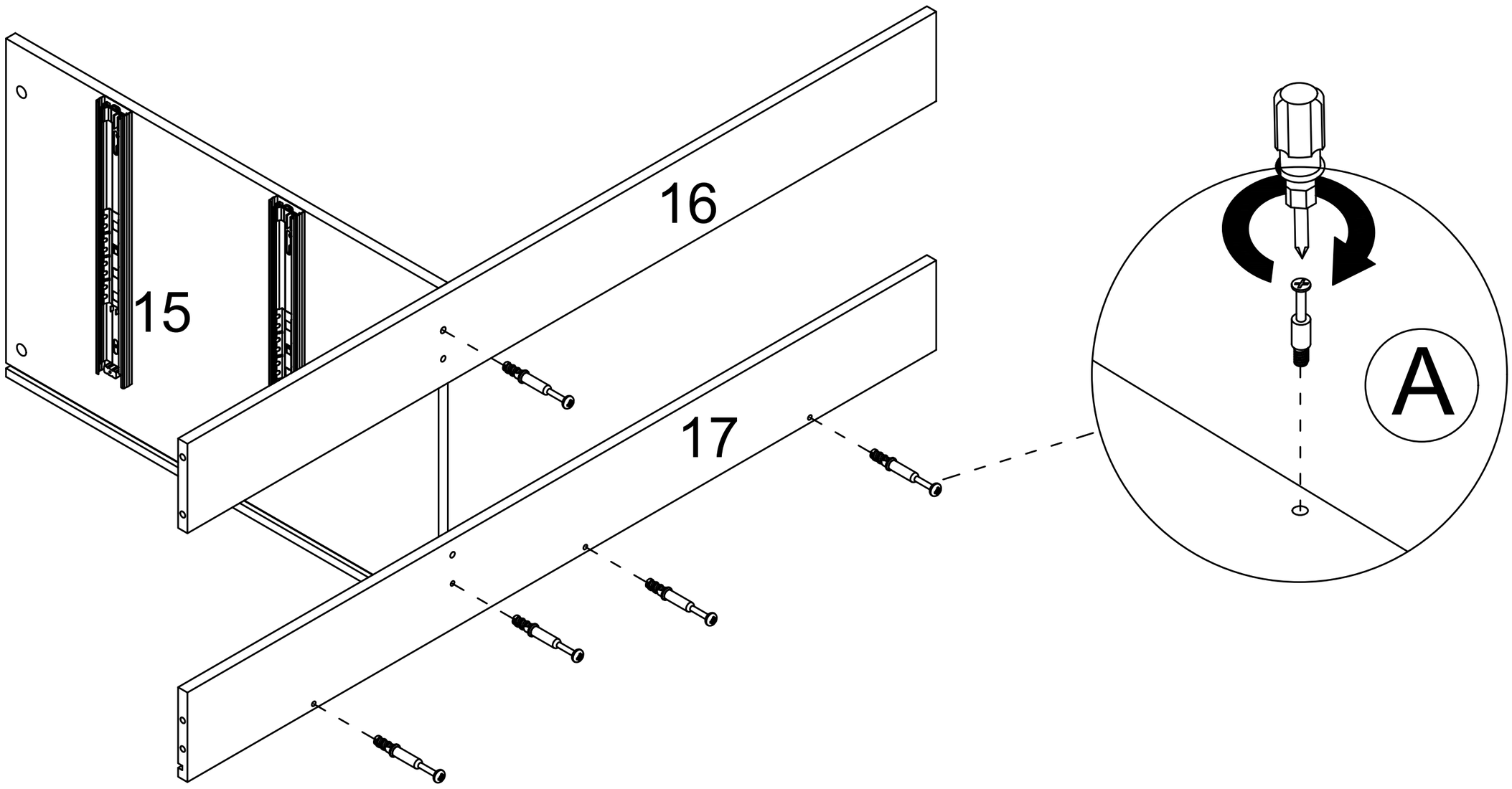

Step 45

B x2

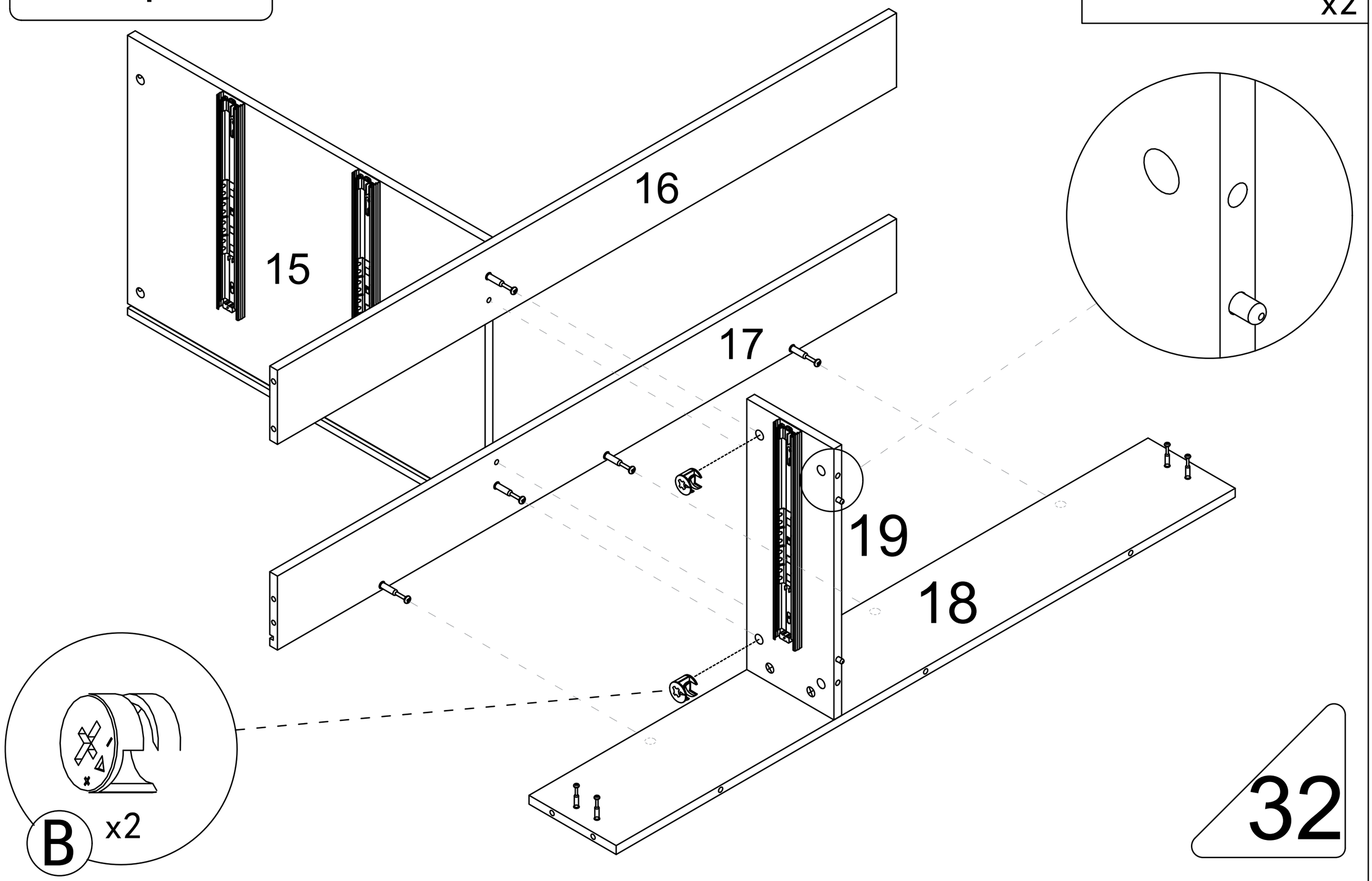

Step 46

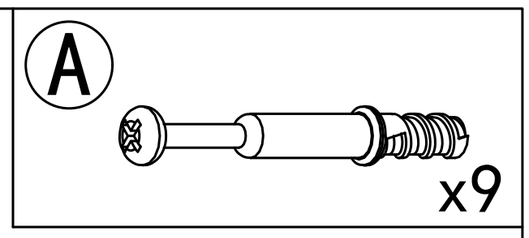

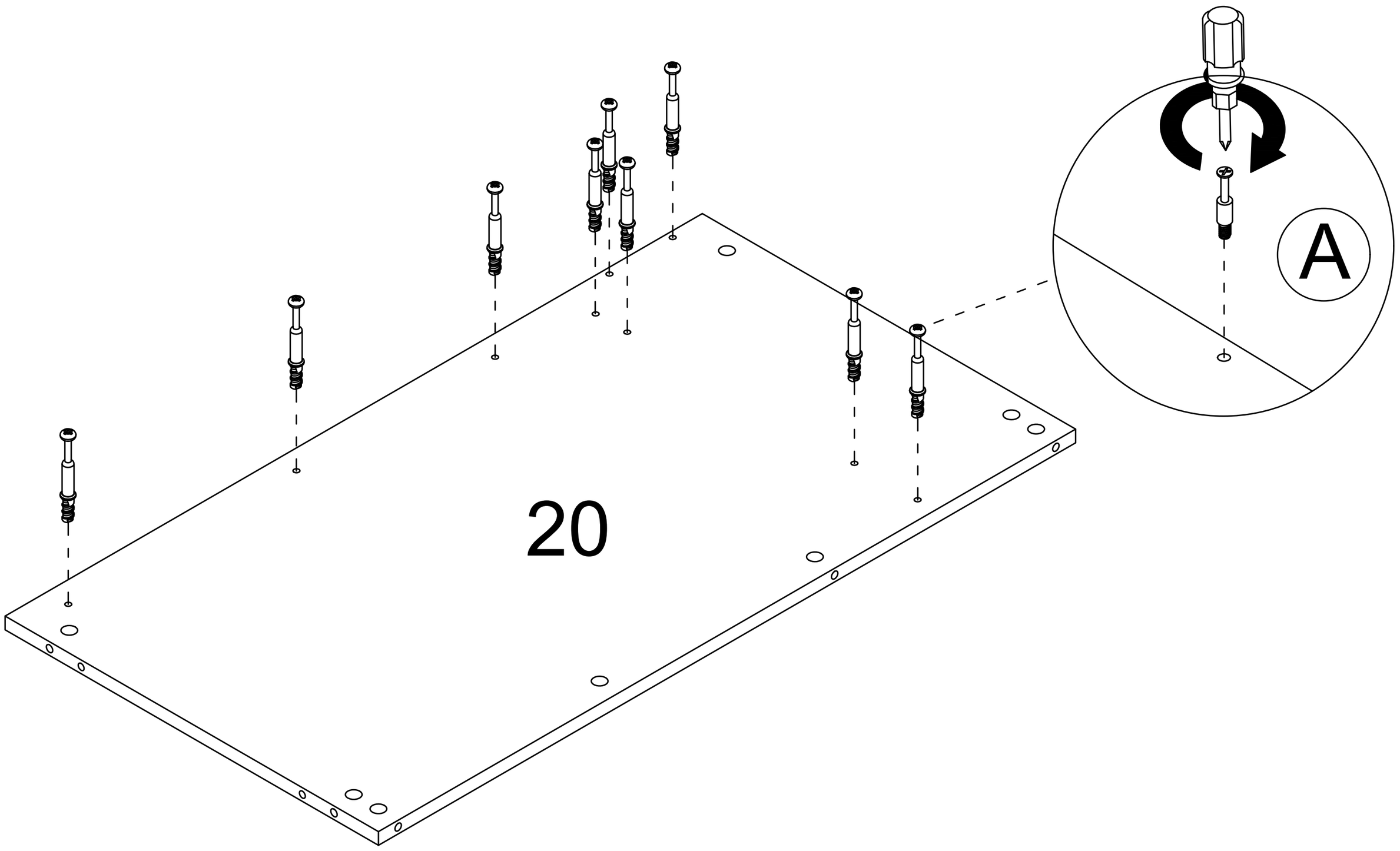

Step 47

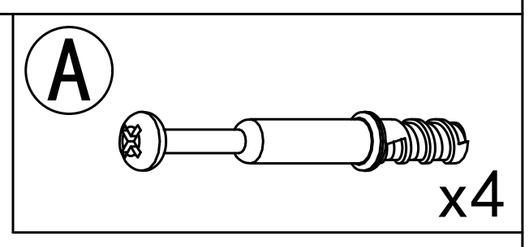

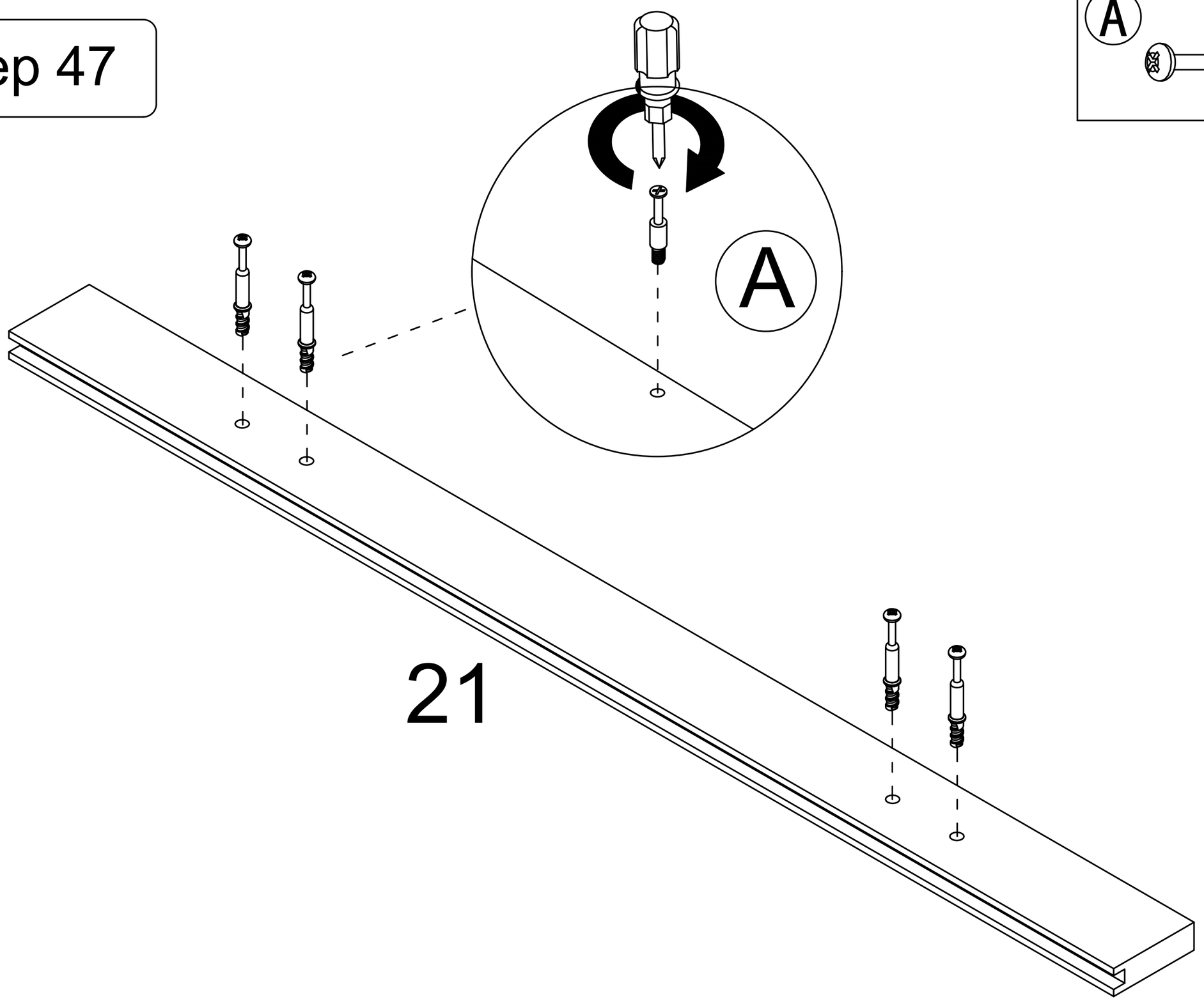

Step 48

B x3

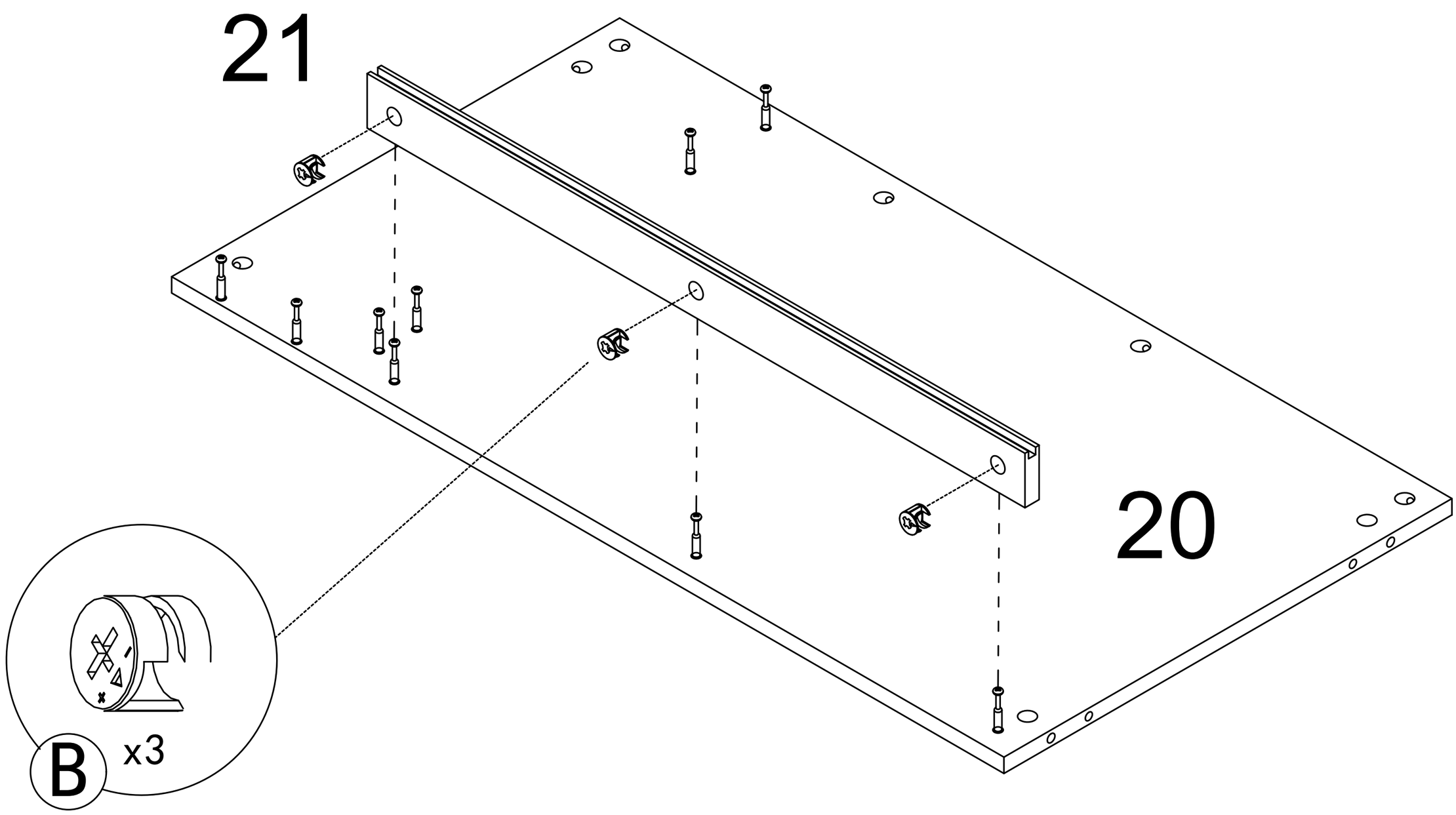

Step 49

B x4

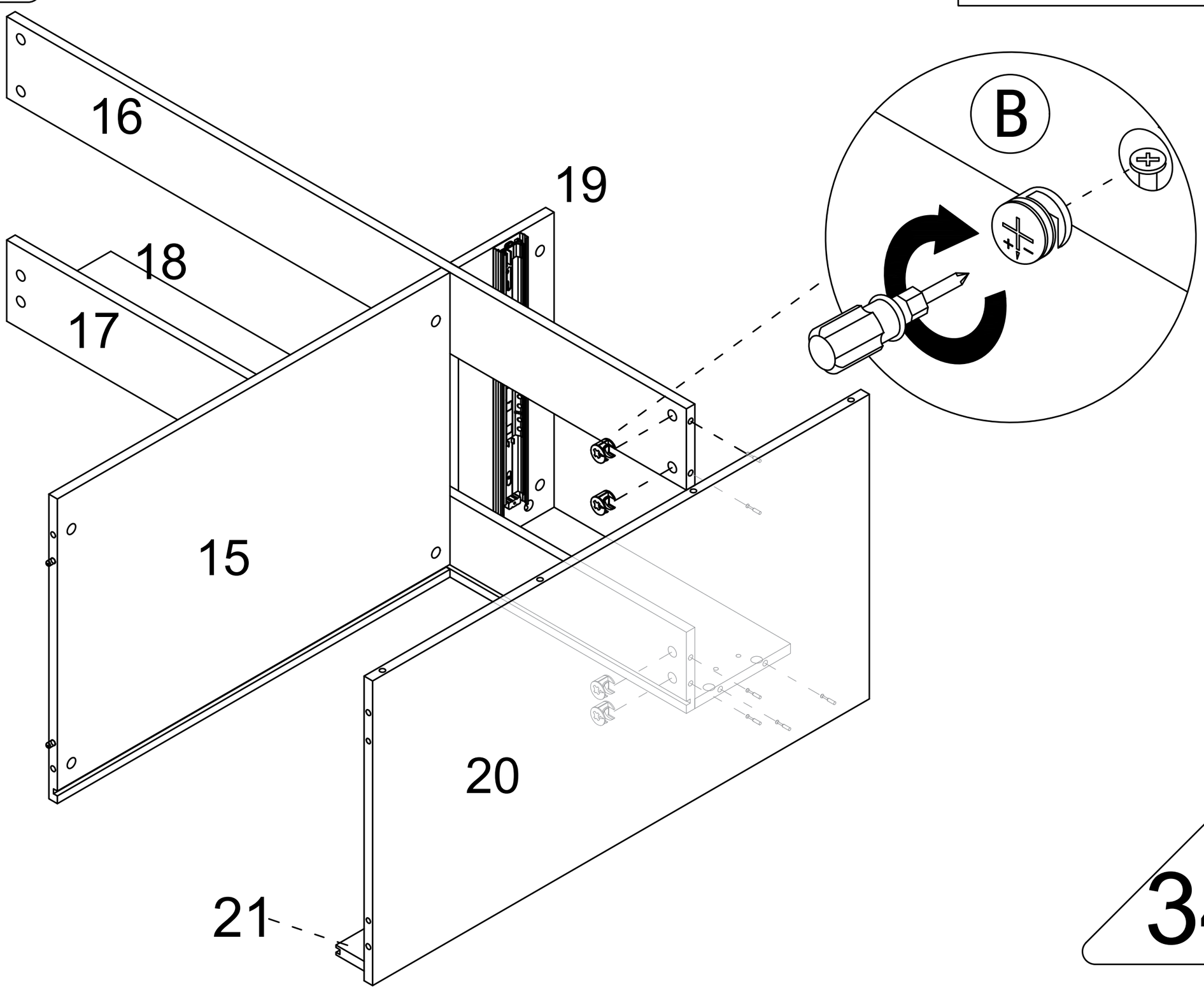

Step 50

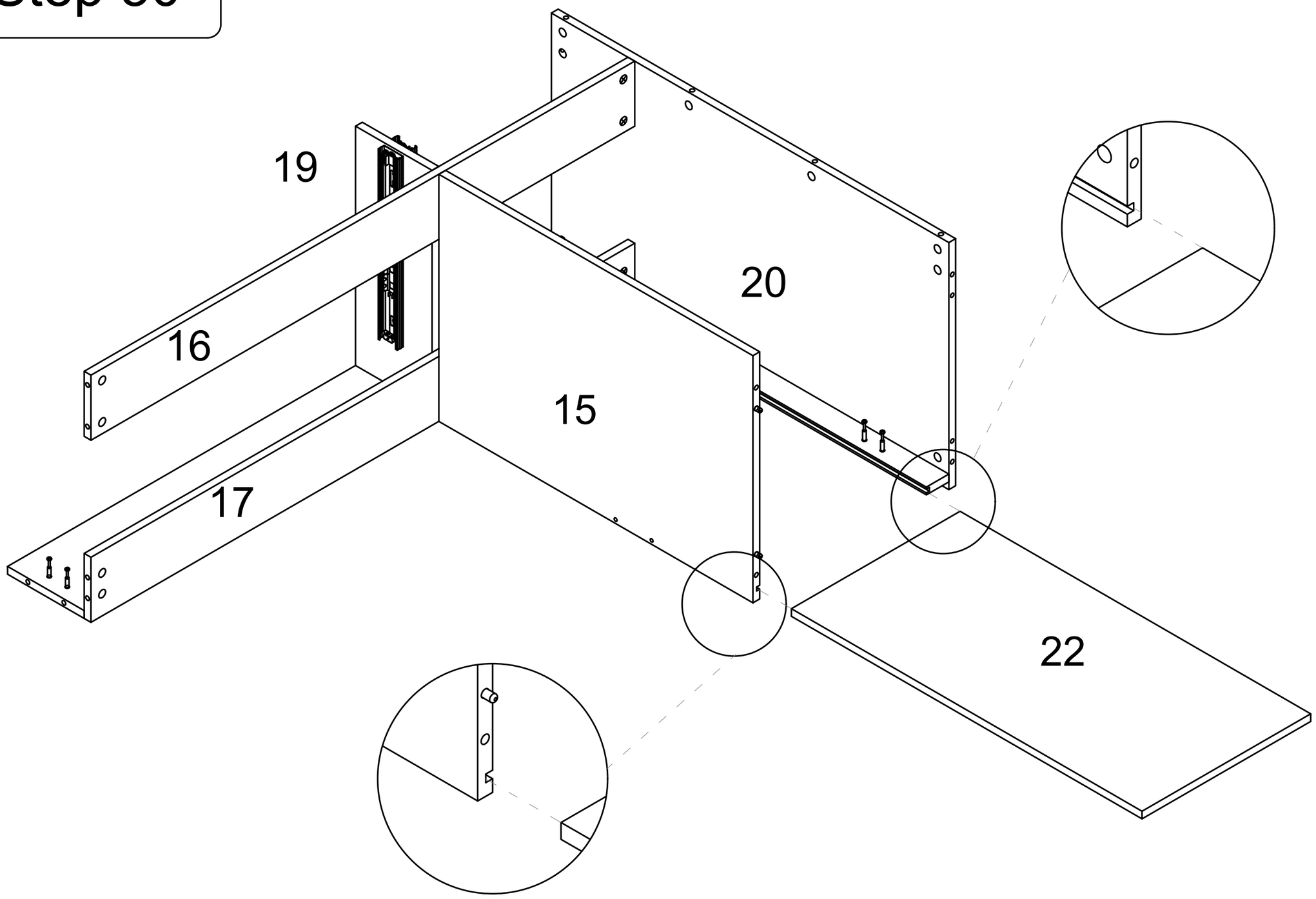

Step 51

C

x2

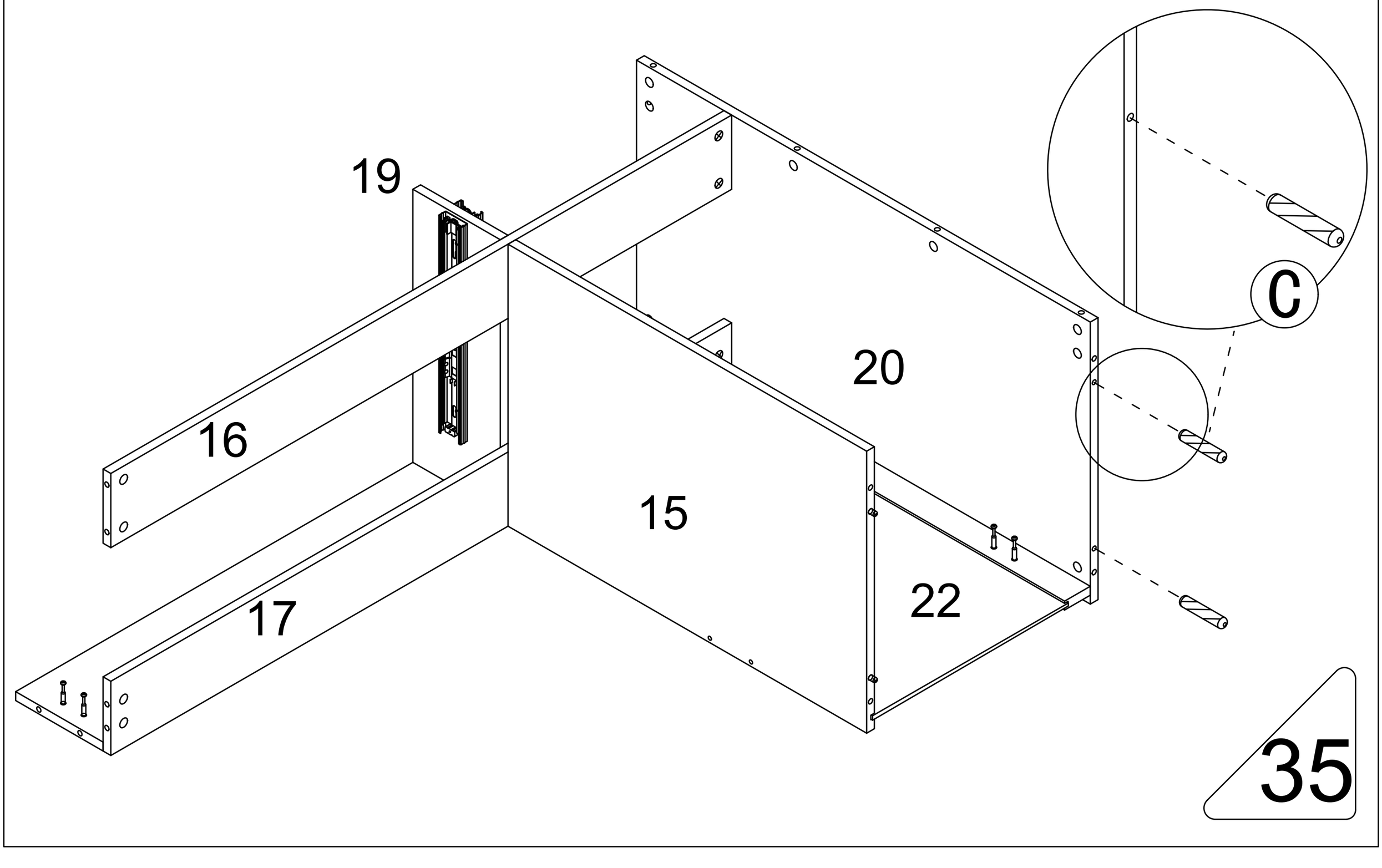

Step 52

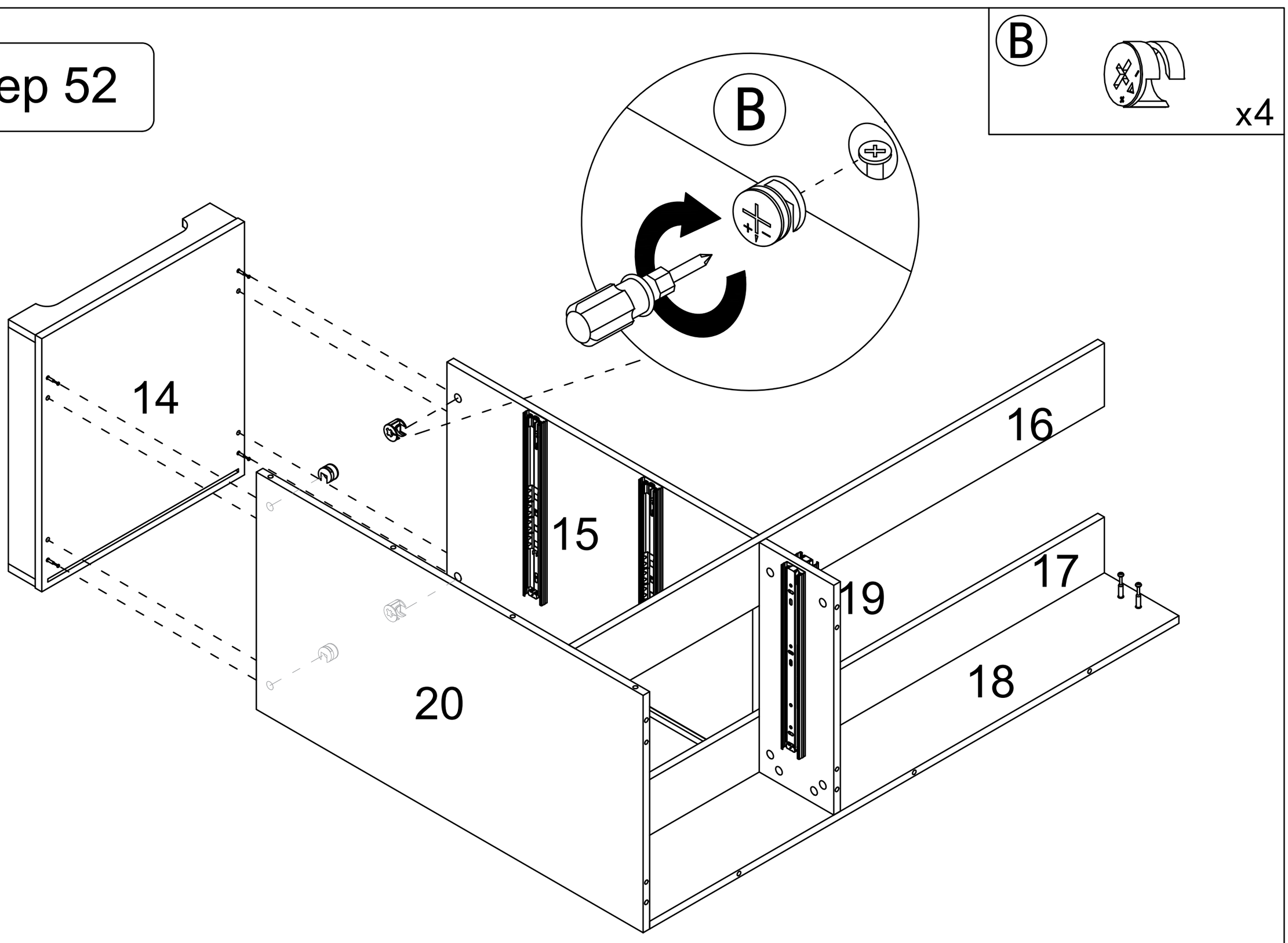

Step 53

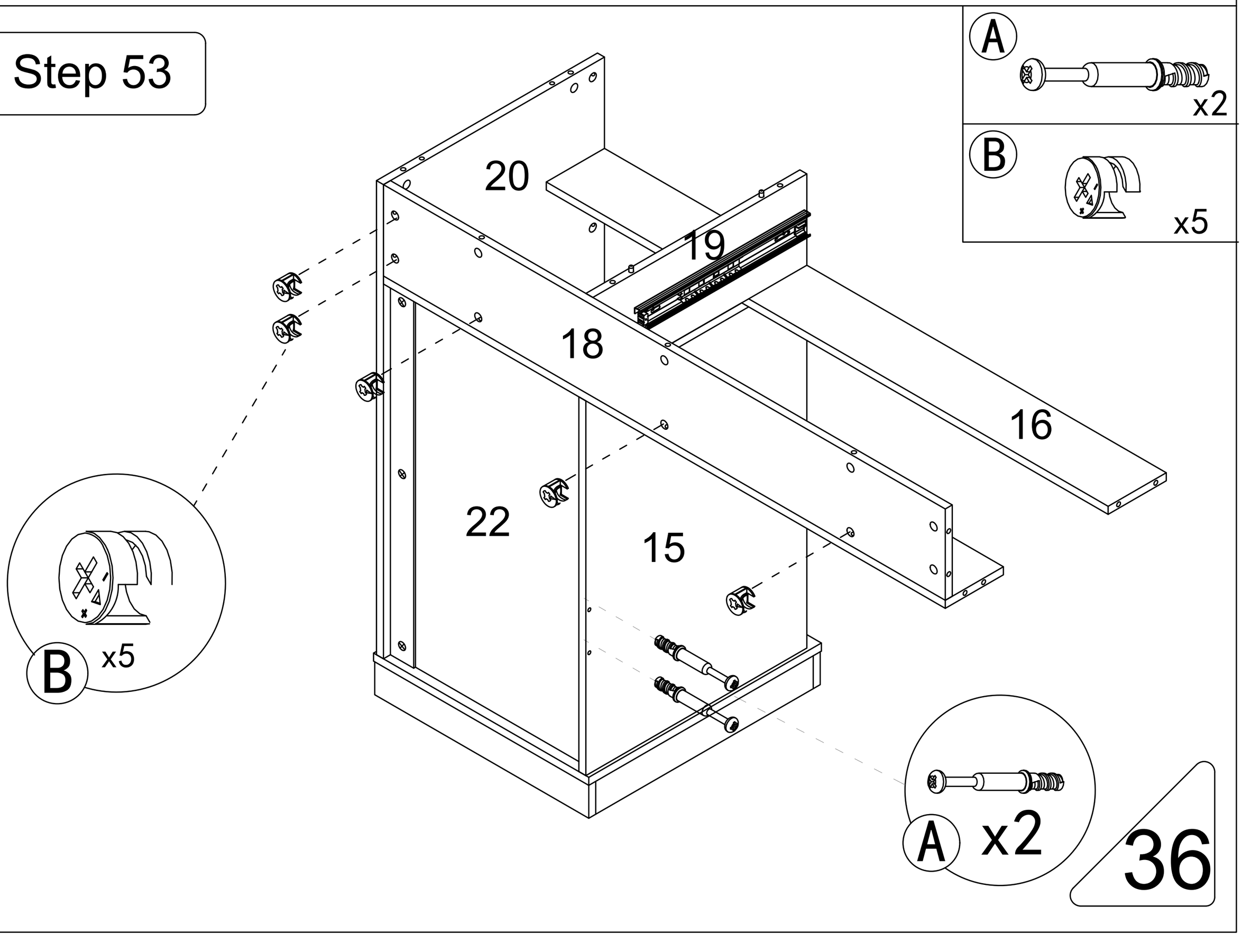

Step 54

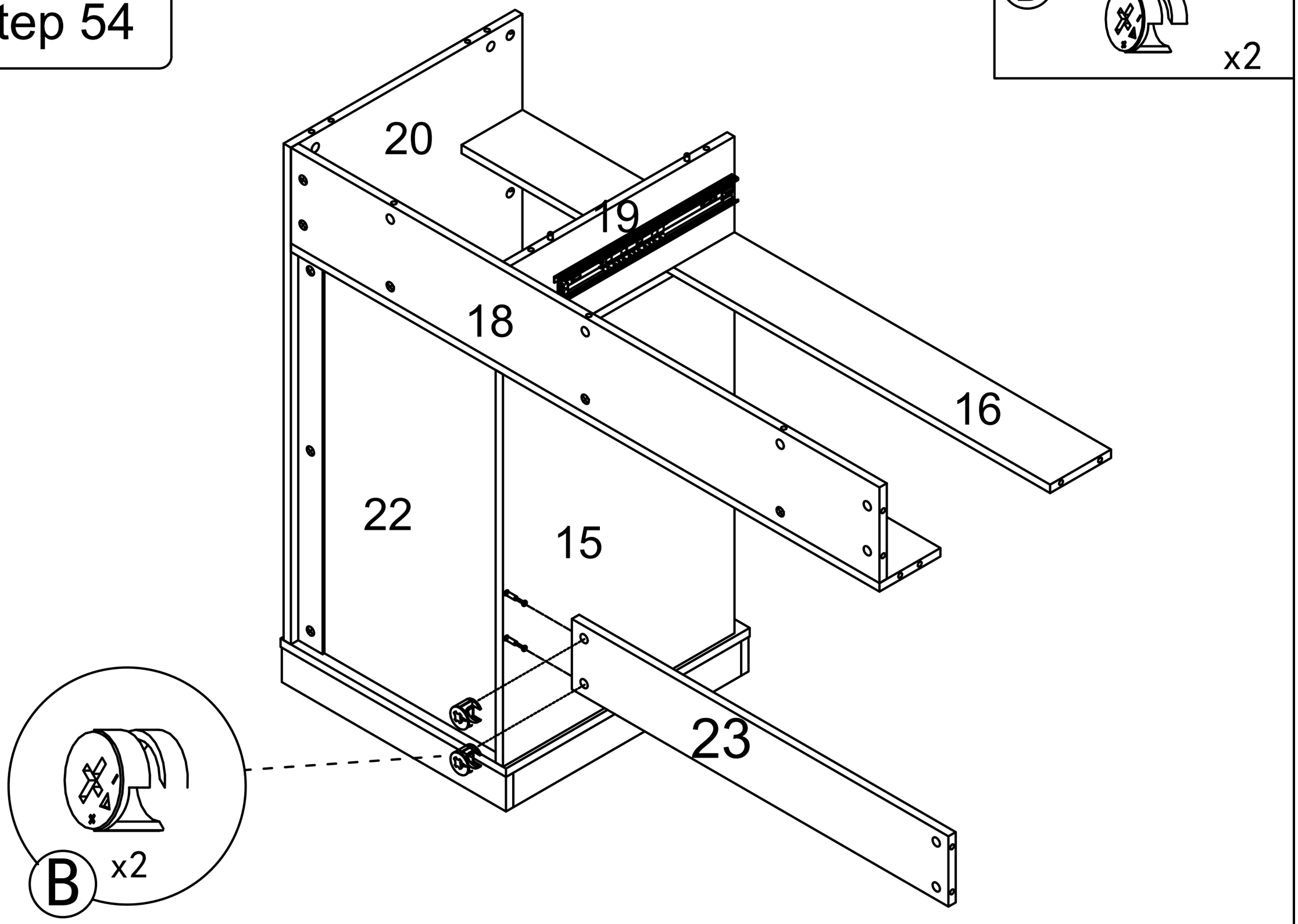

Step 55

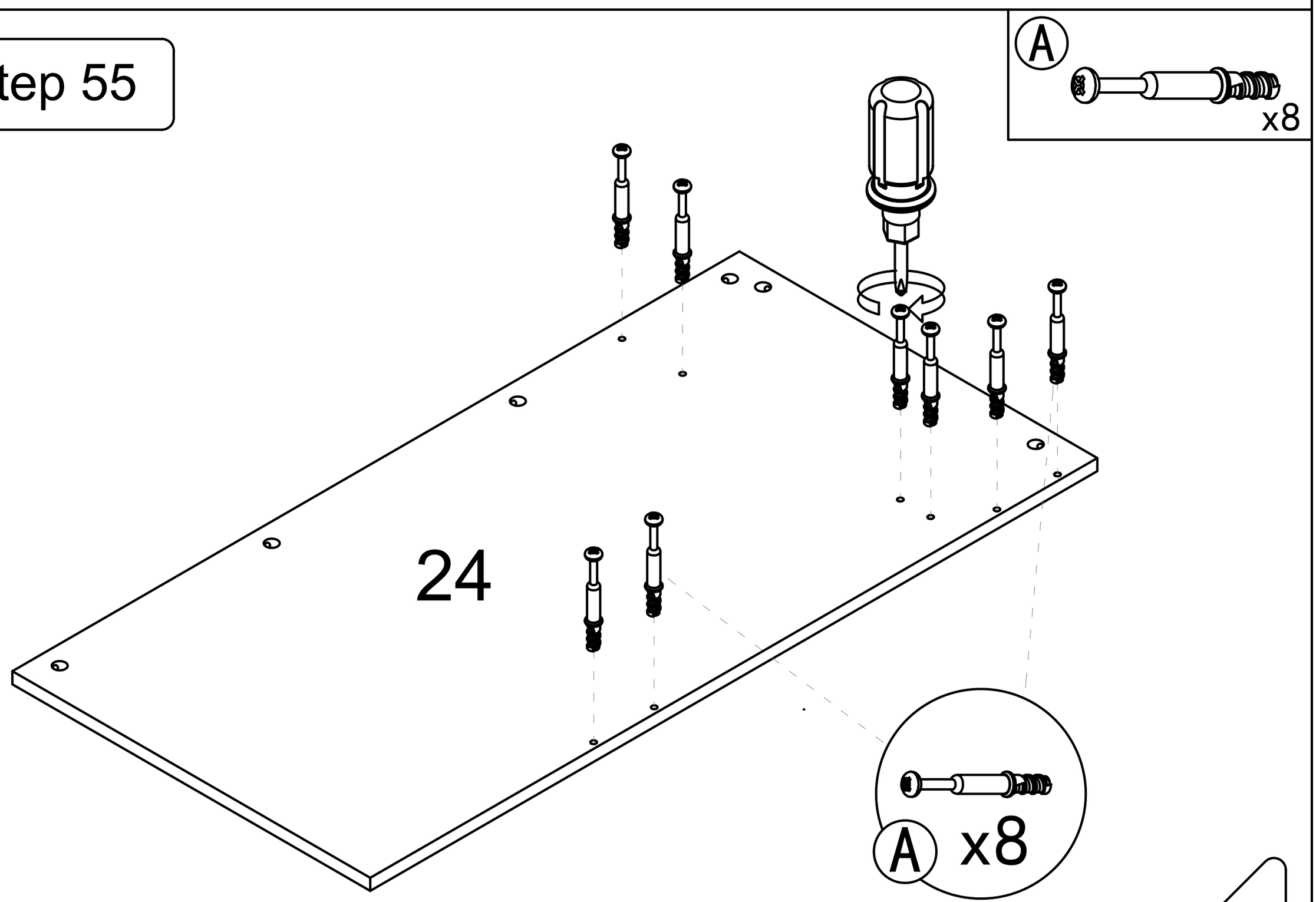

Step 56

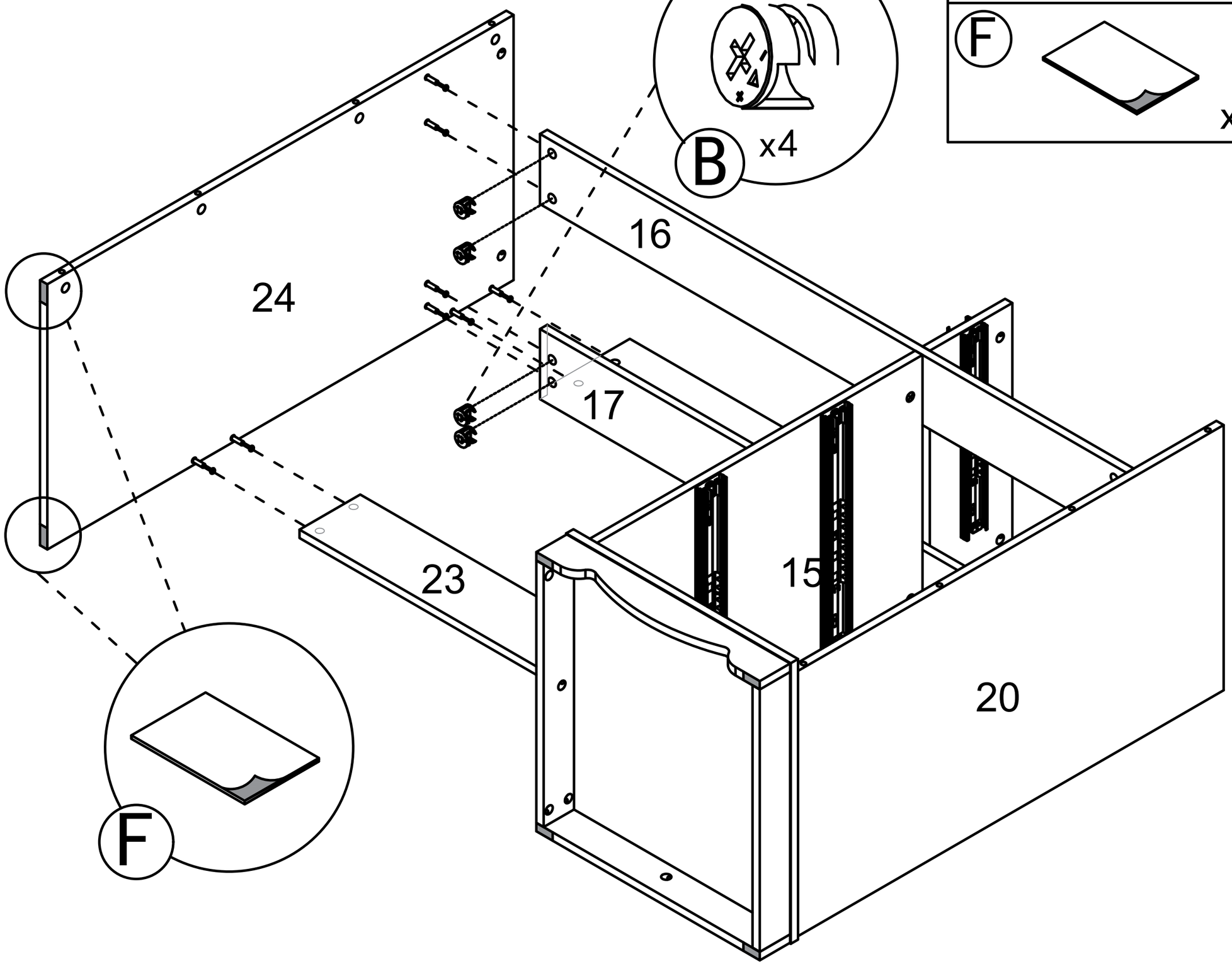

Step 57

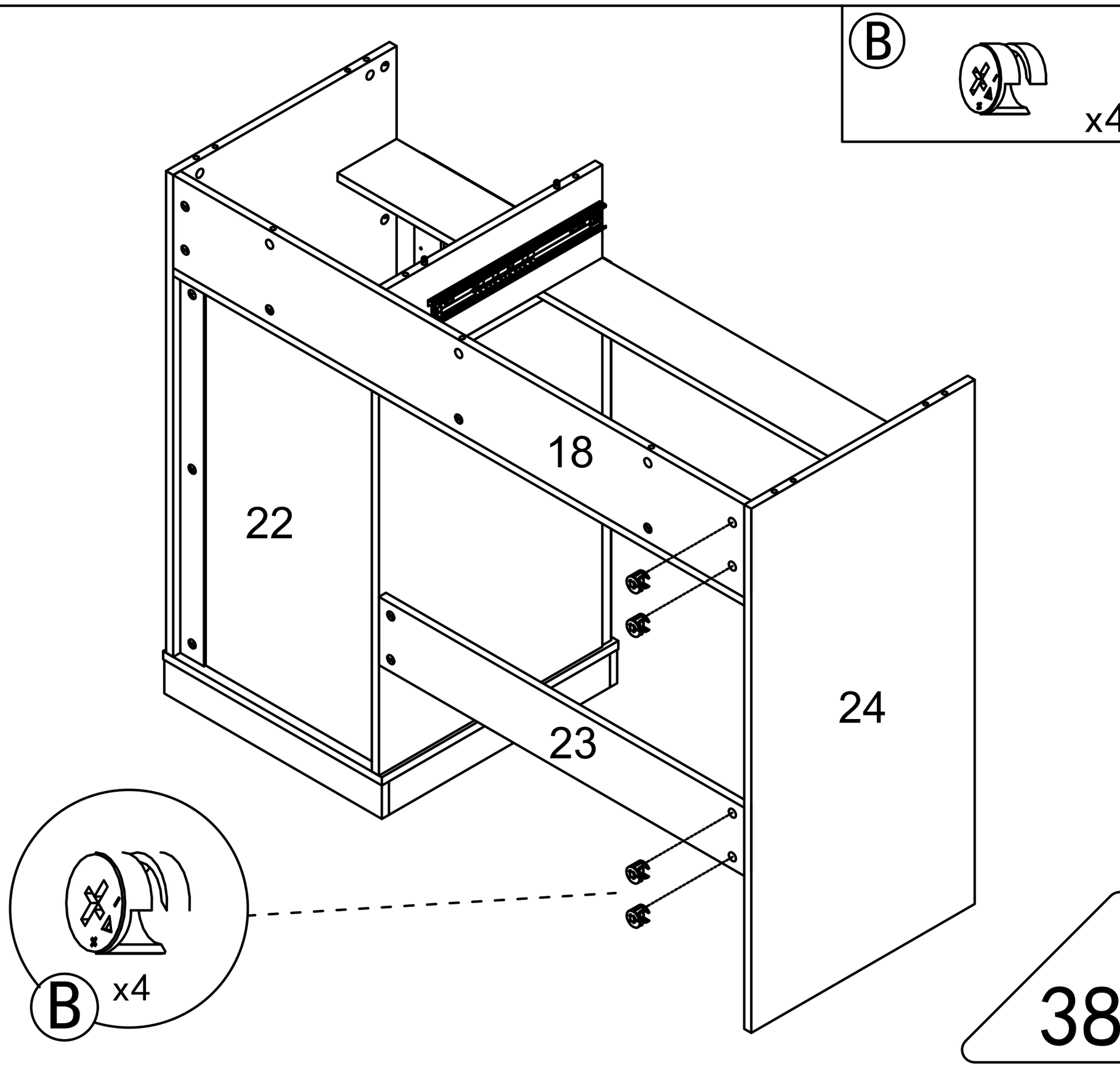

Step 58

B x4

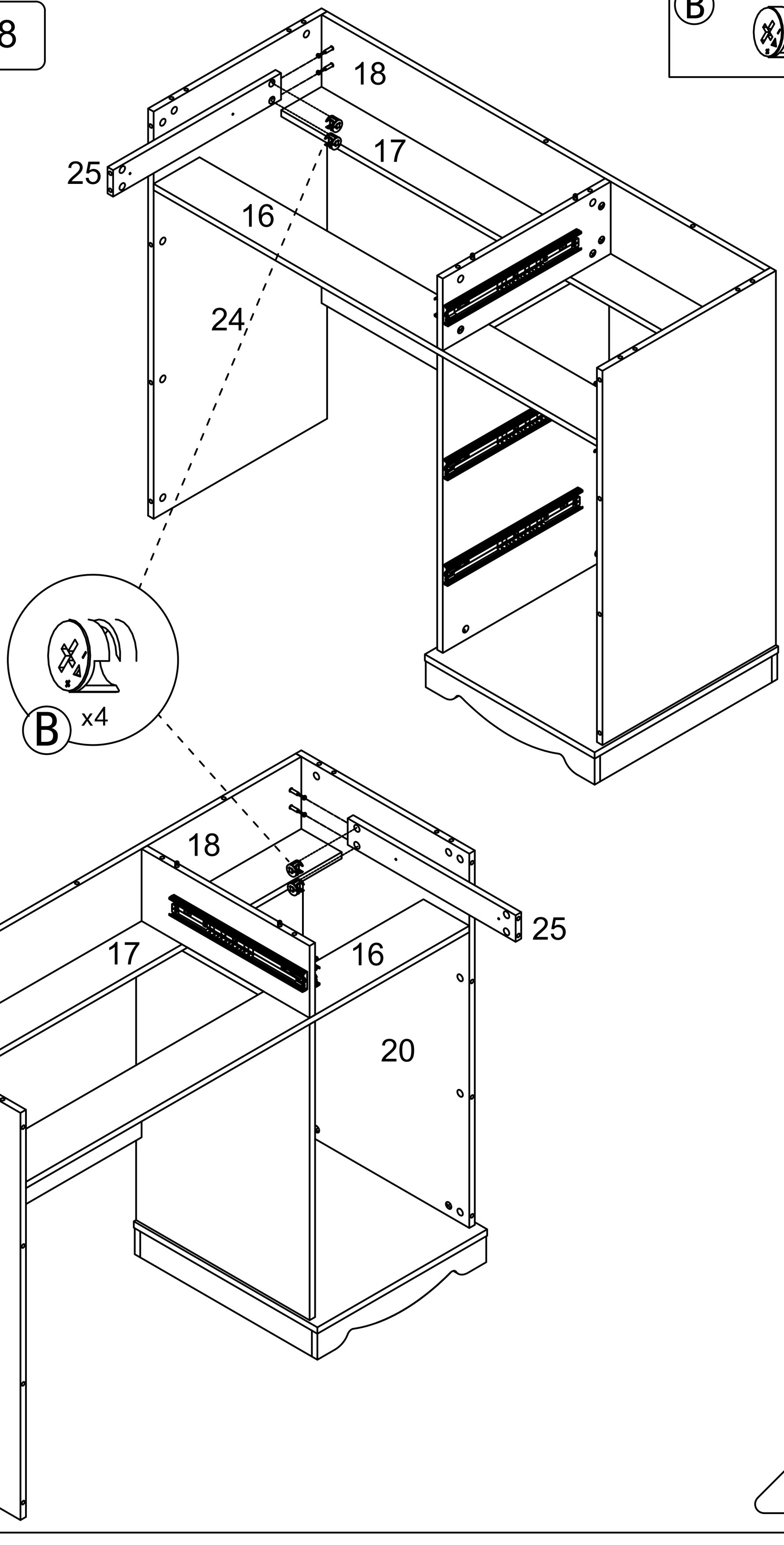

Step 59

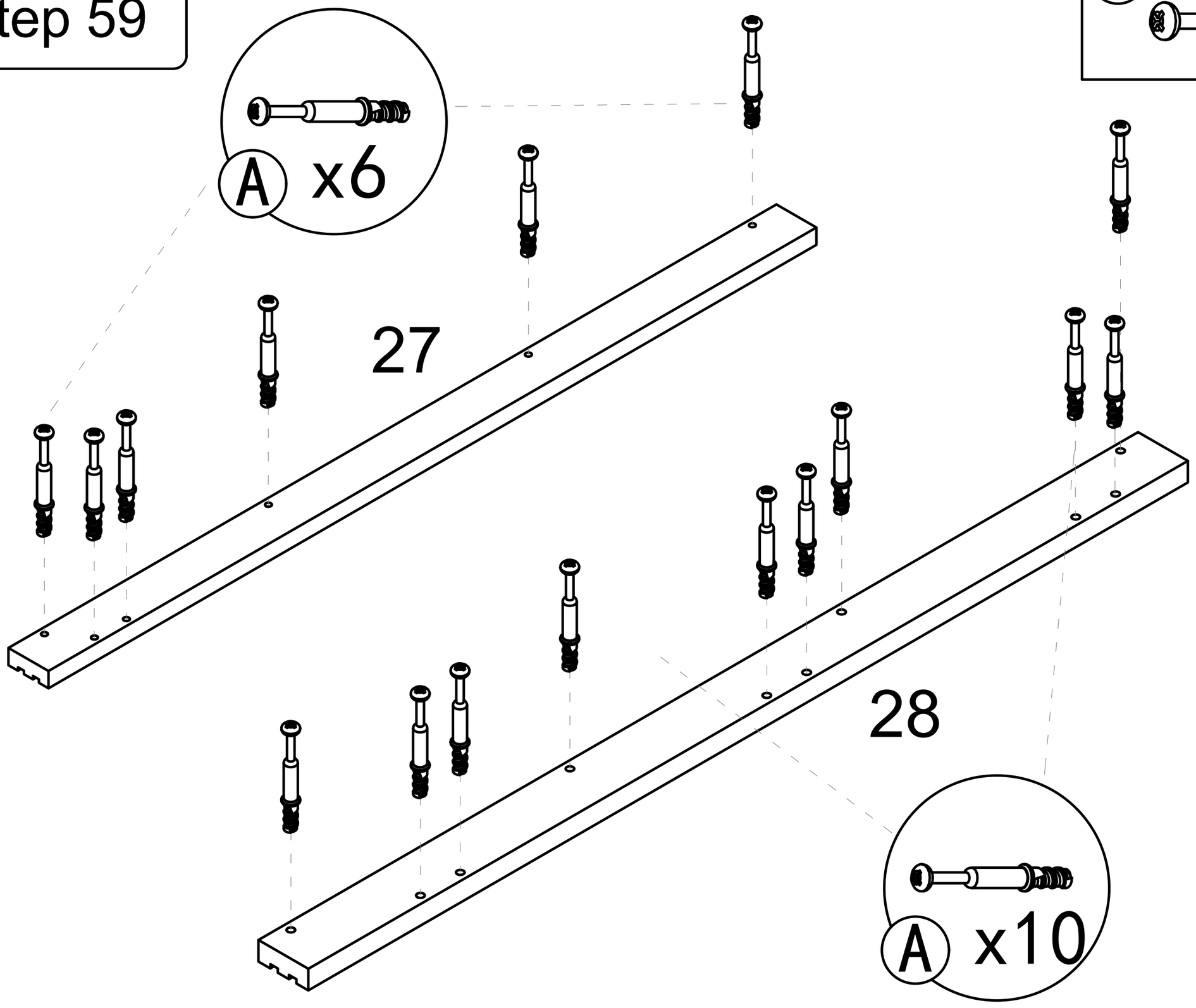

A

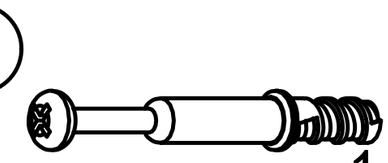

x16

Step 60

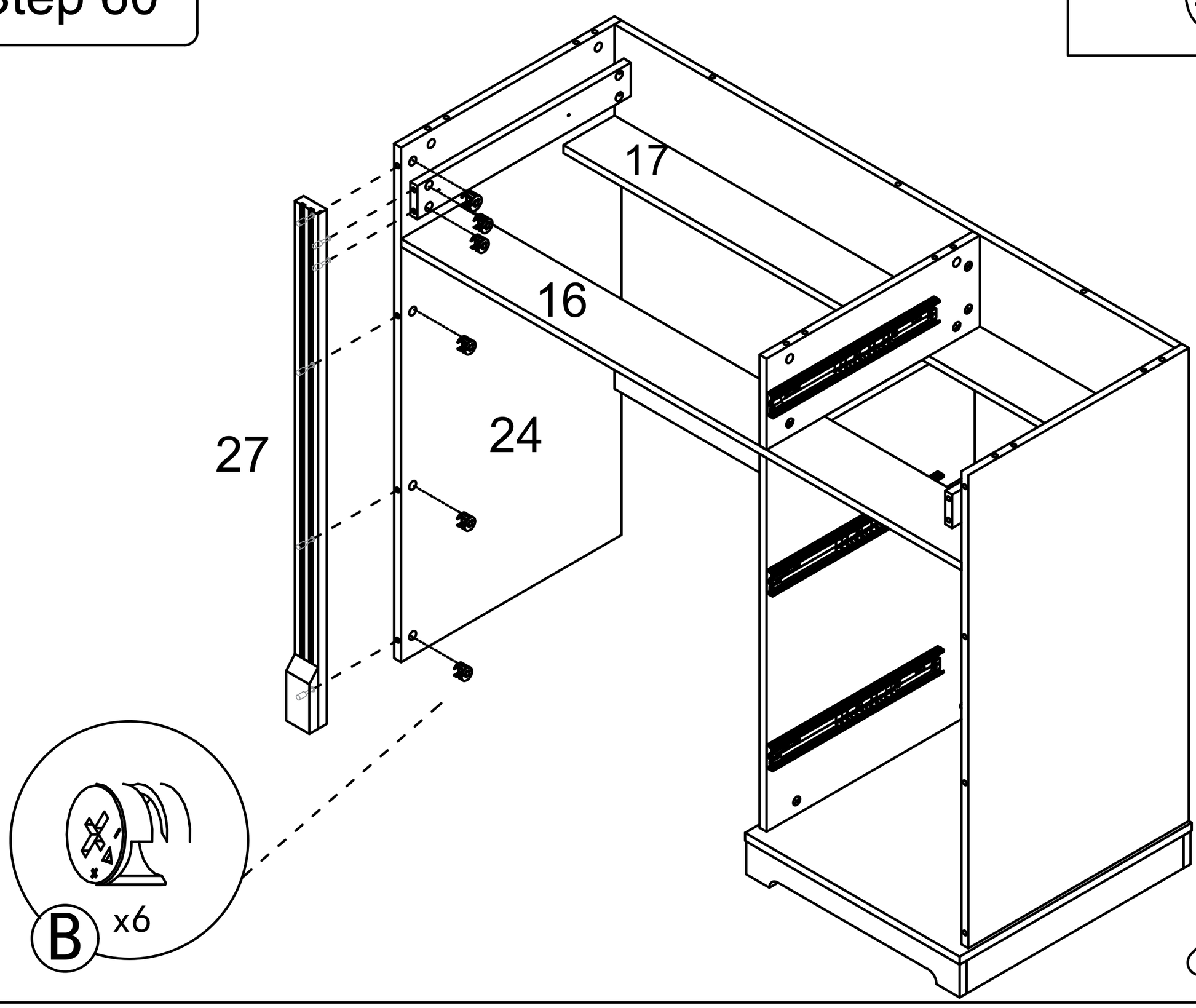

B

x6

Step 61

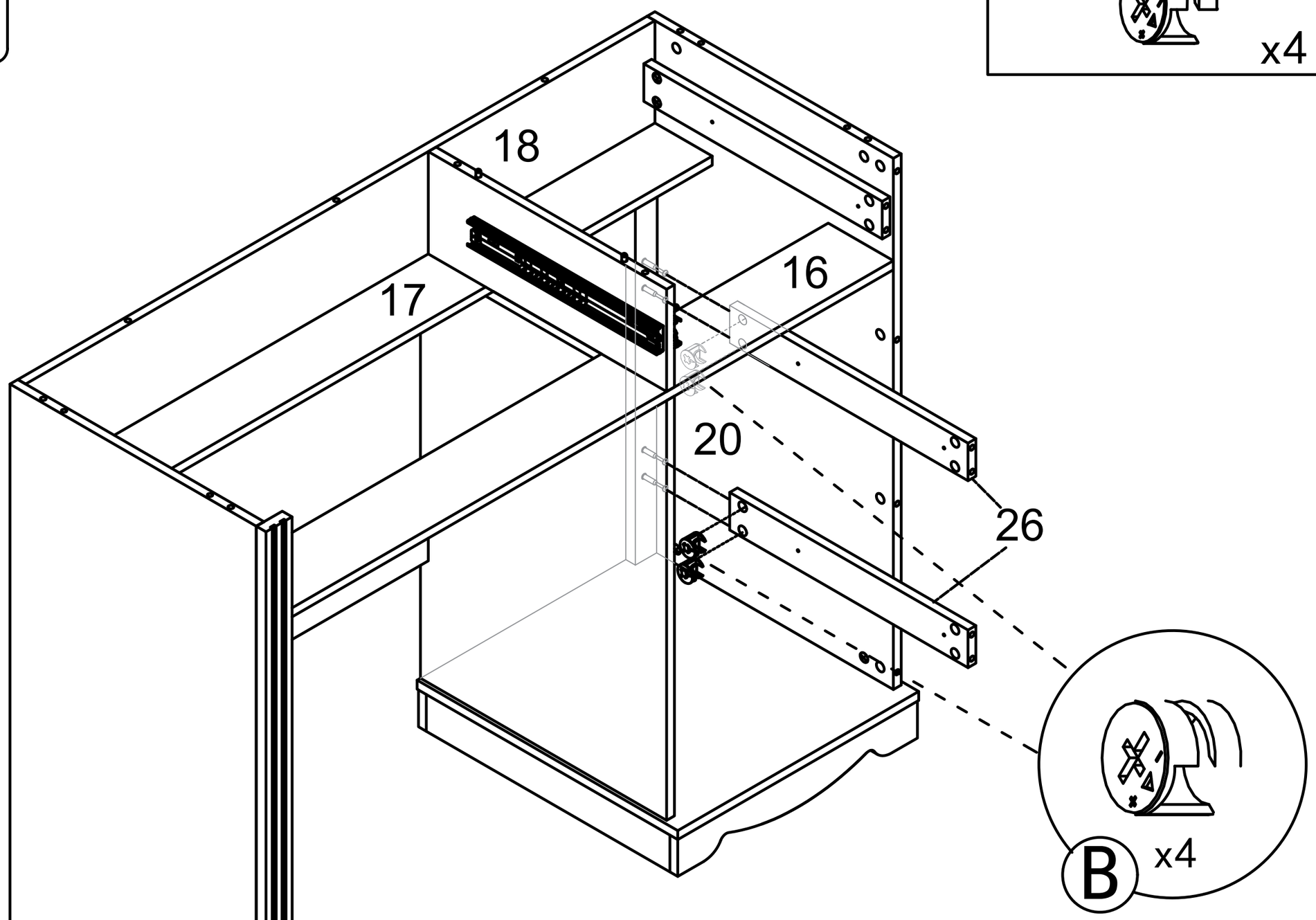

B x4

Step 62

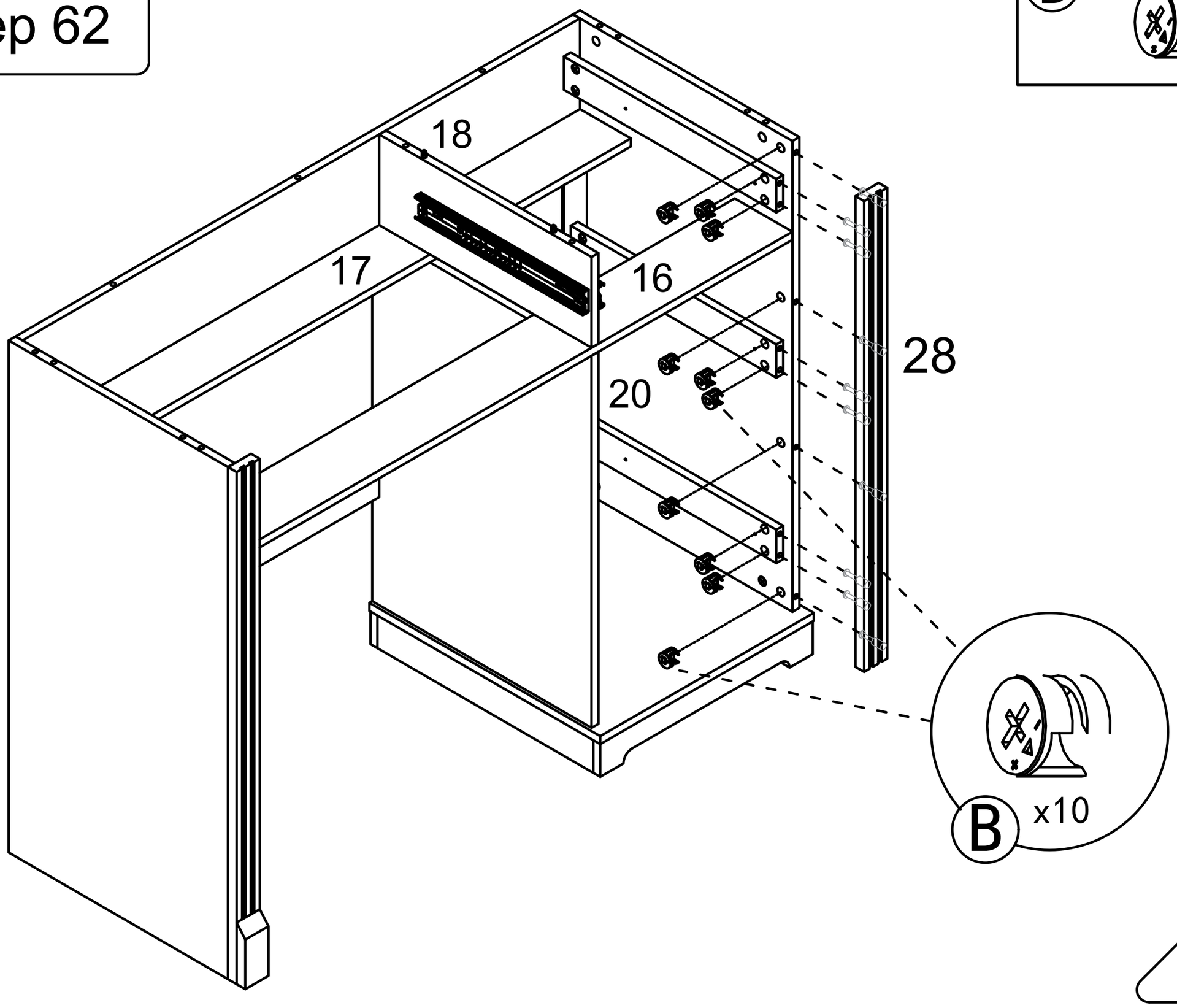

B x10

Step 63

Ⓓ x8

x4

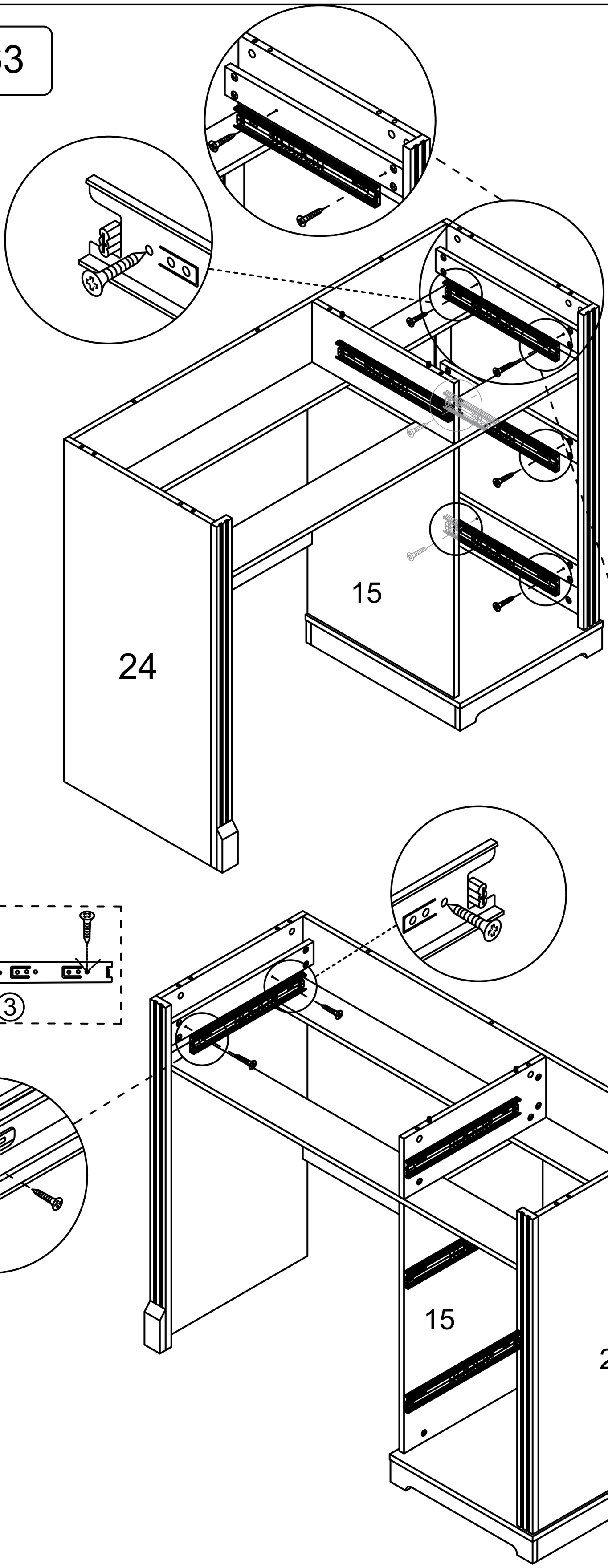

Step 64

Ⓓ x4

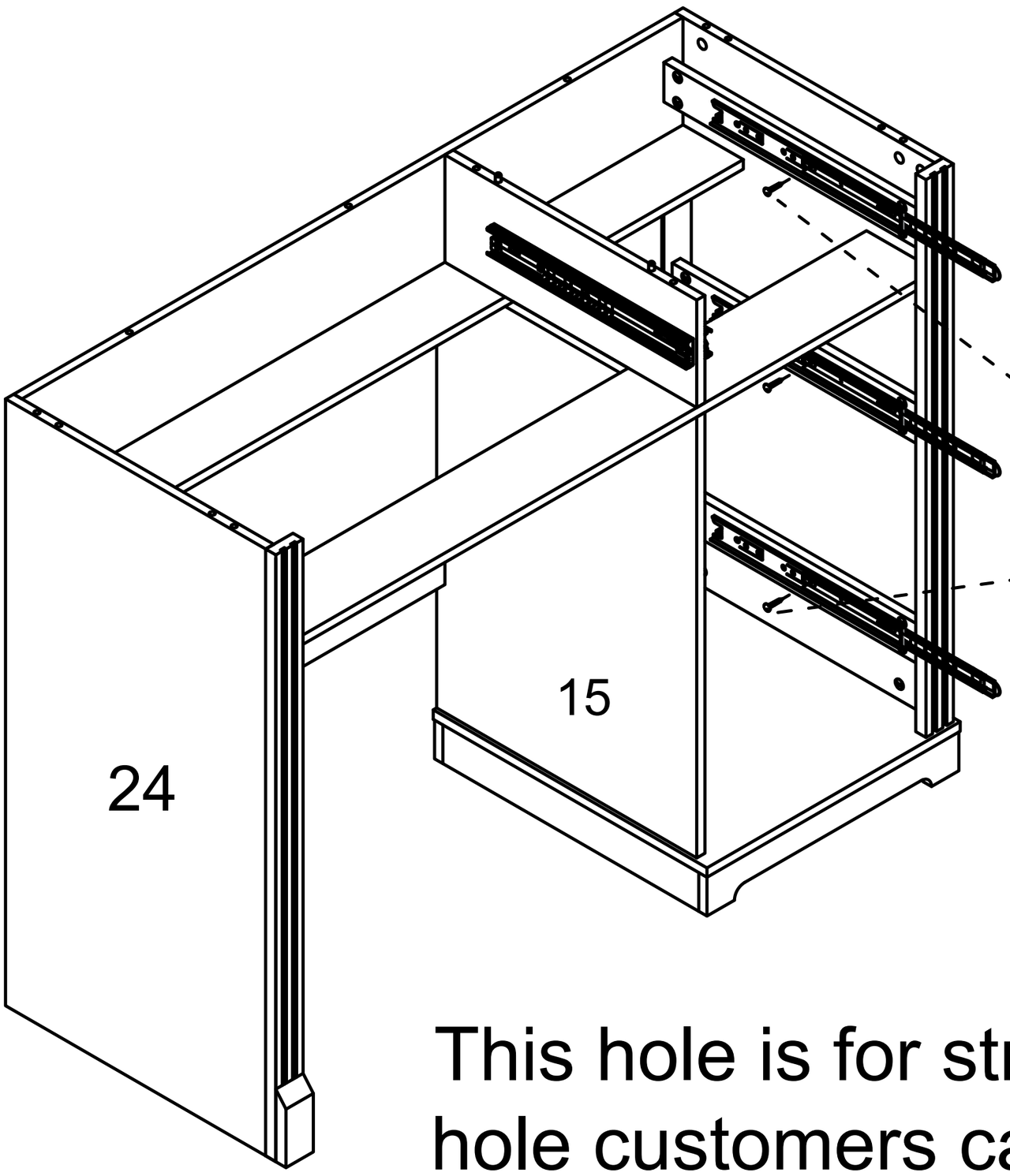

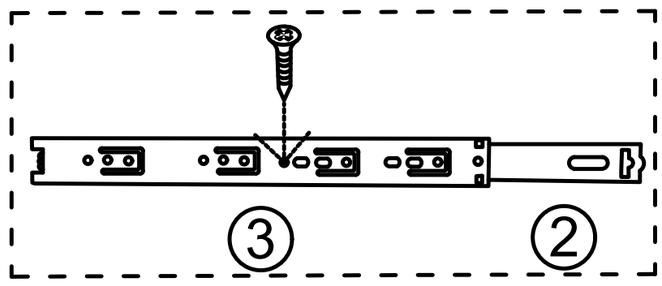

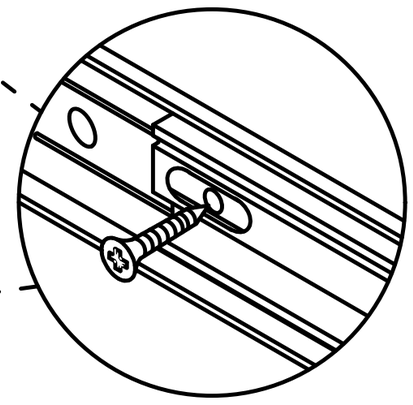

This hole is for strengthening fixed hole customers can choose to install according to their needs.

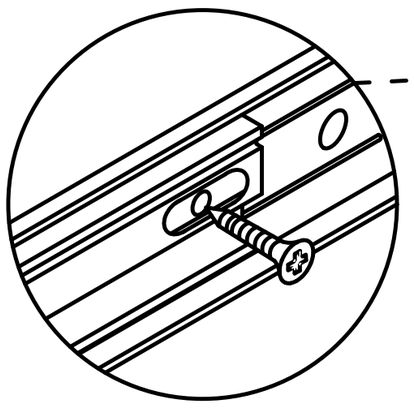

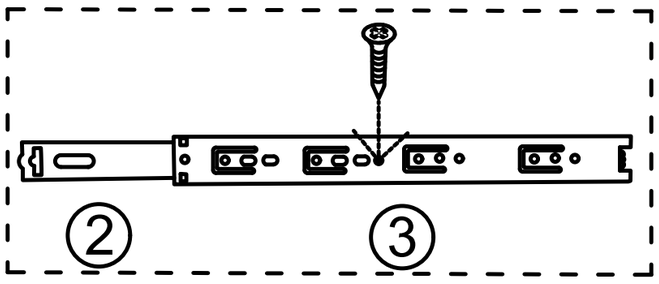

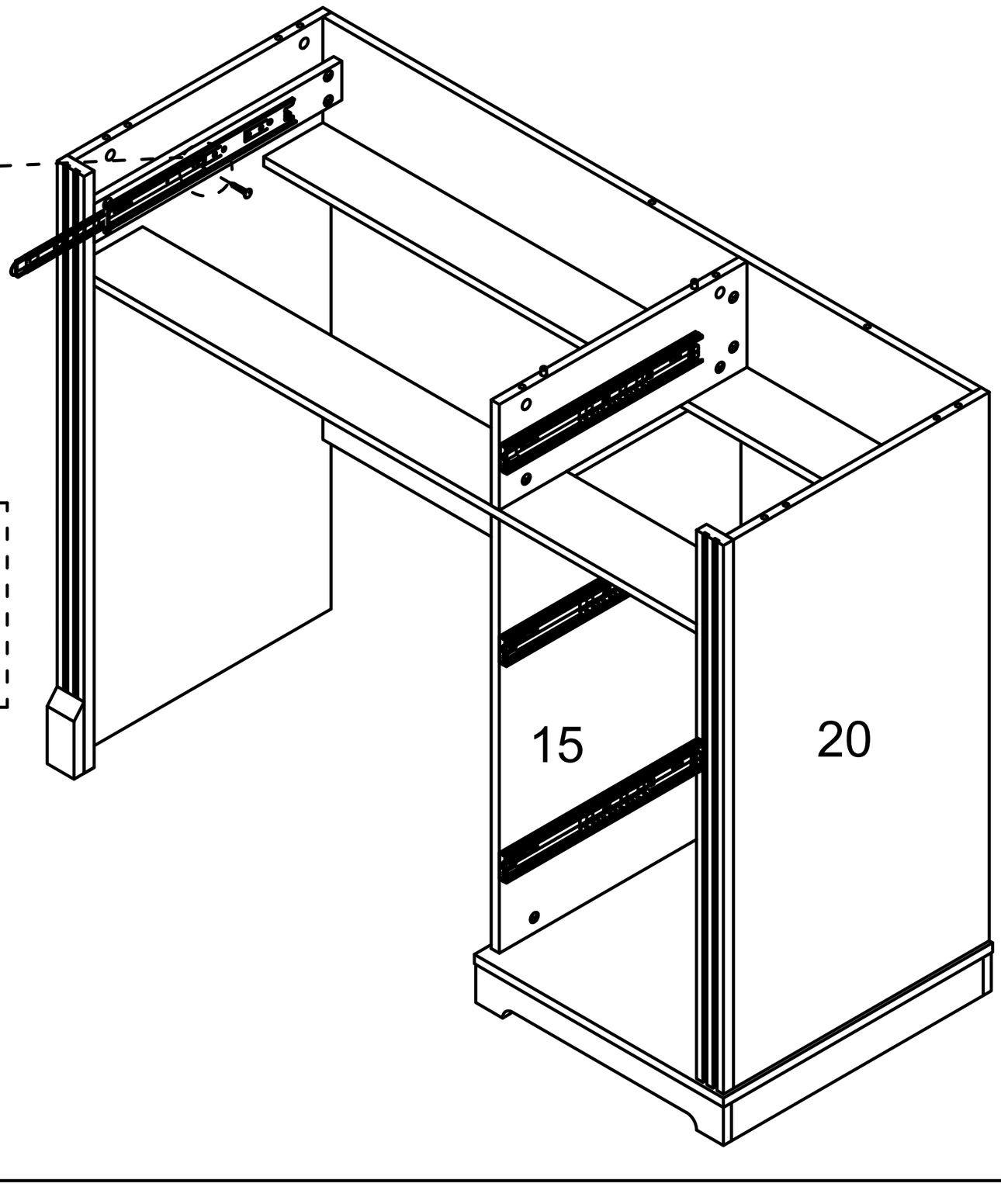

Step 65

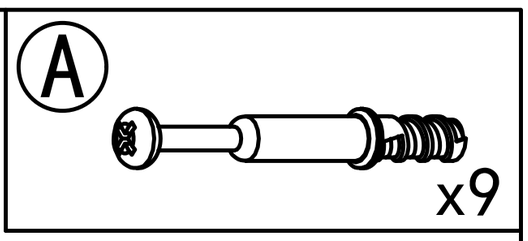

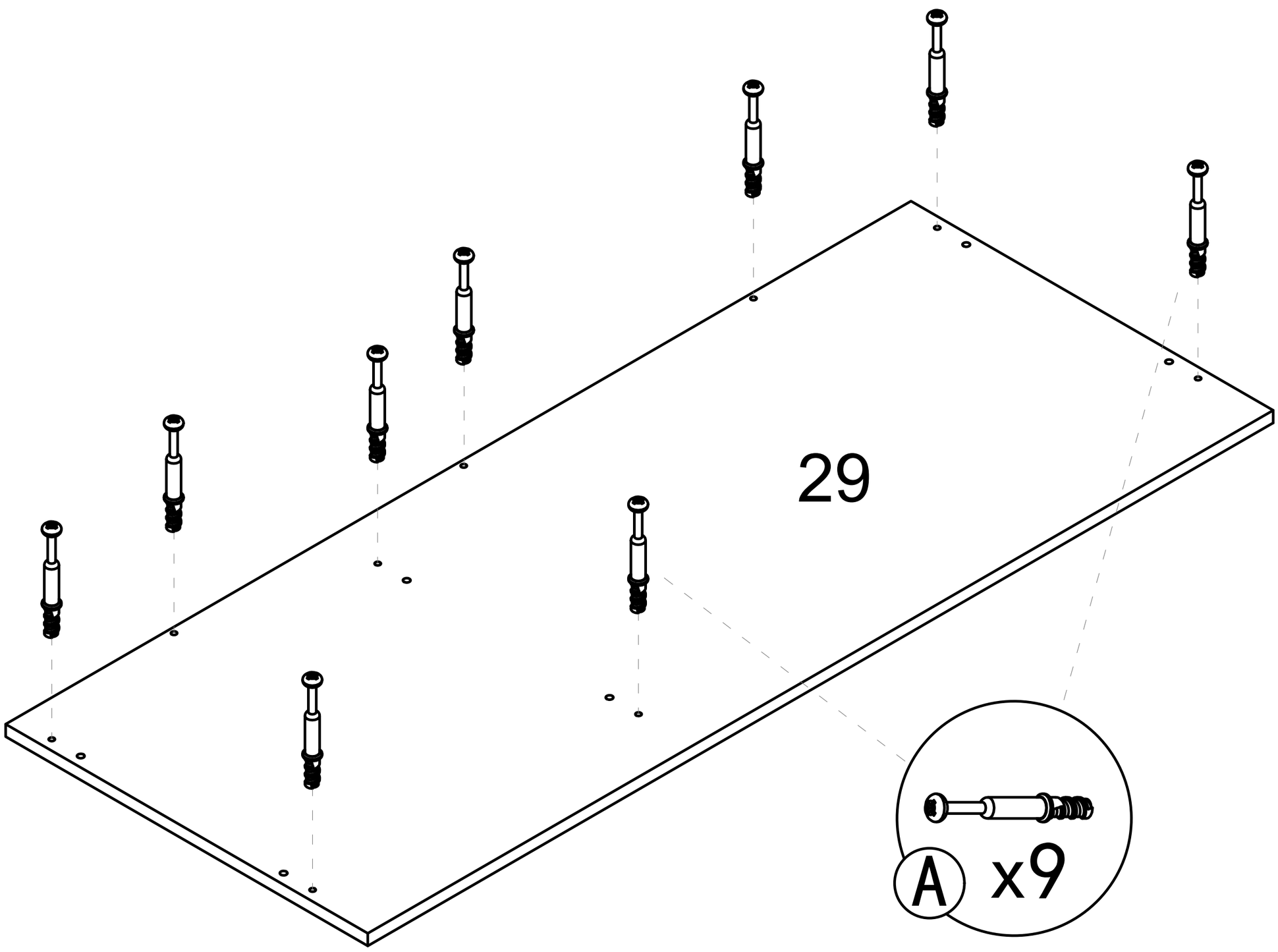

Step 66

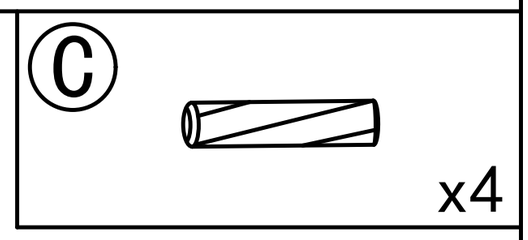

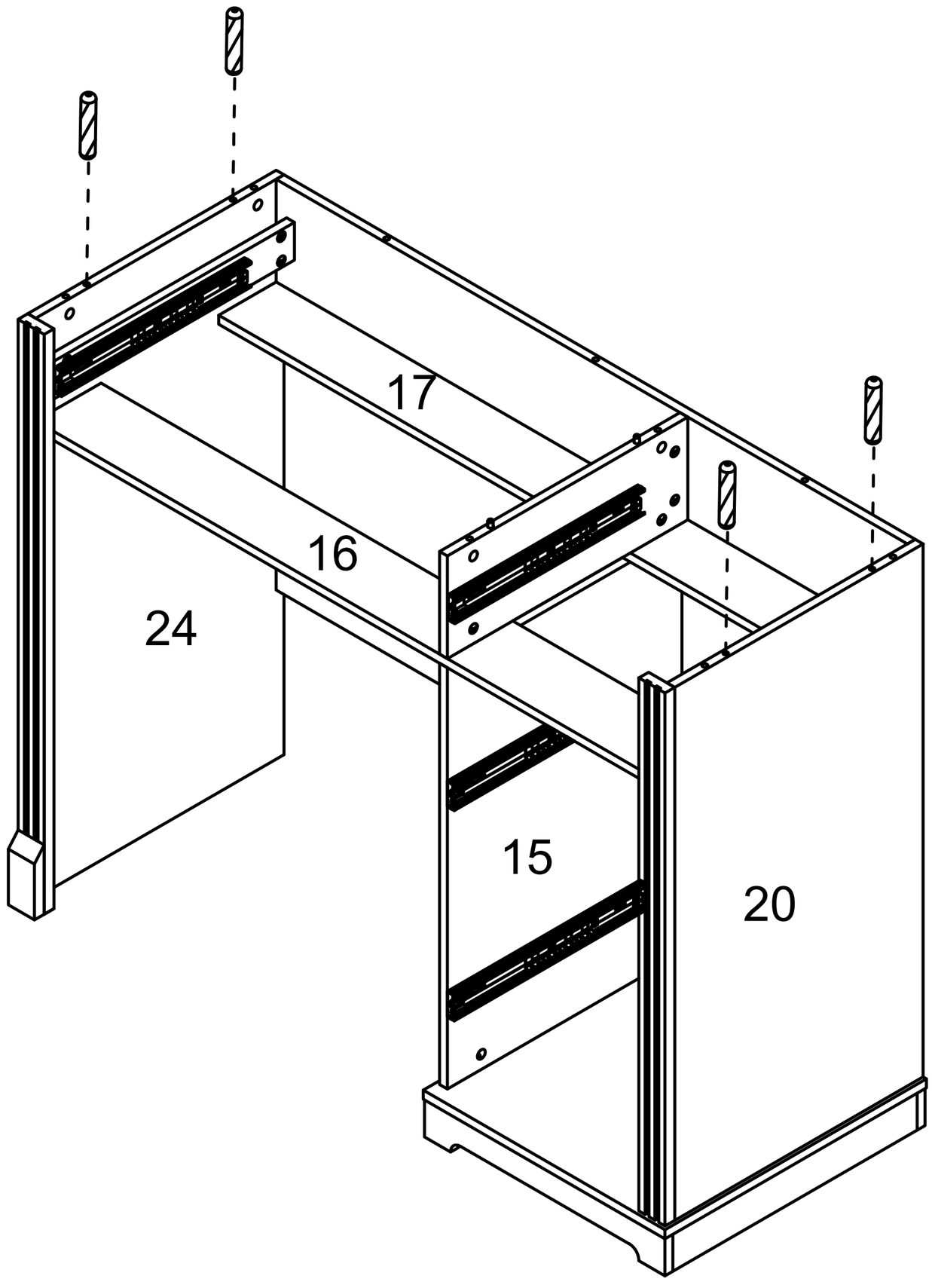

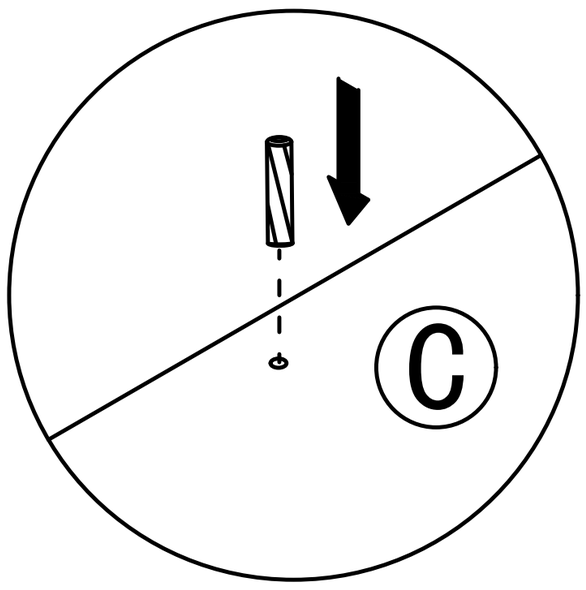

Step 67

B x4

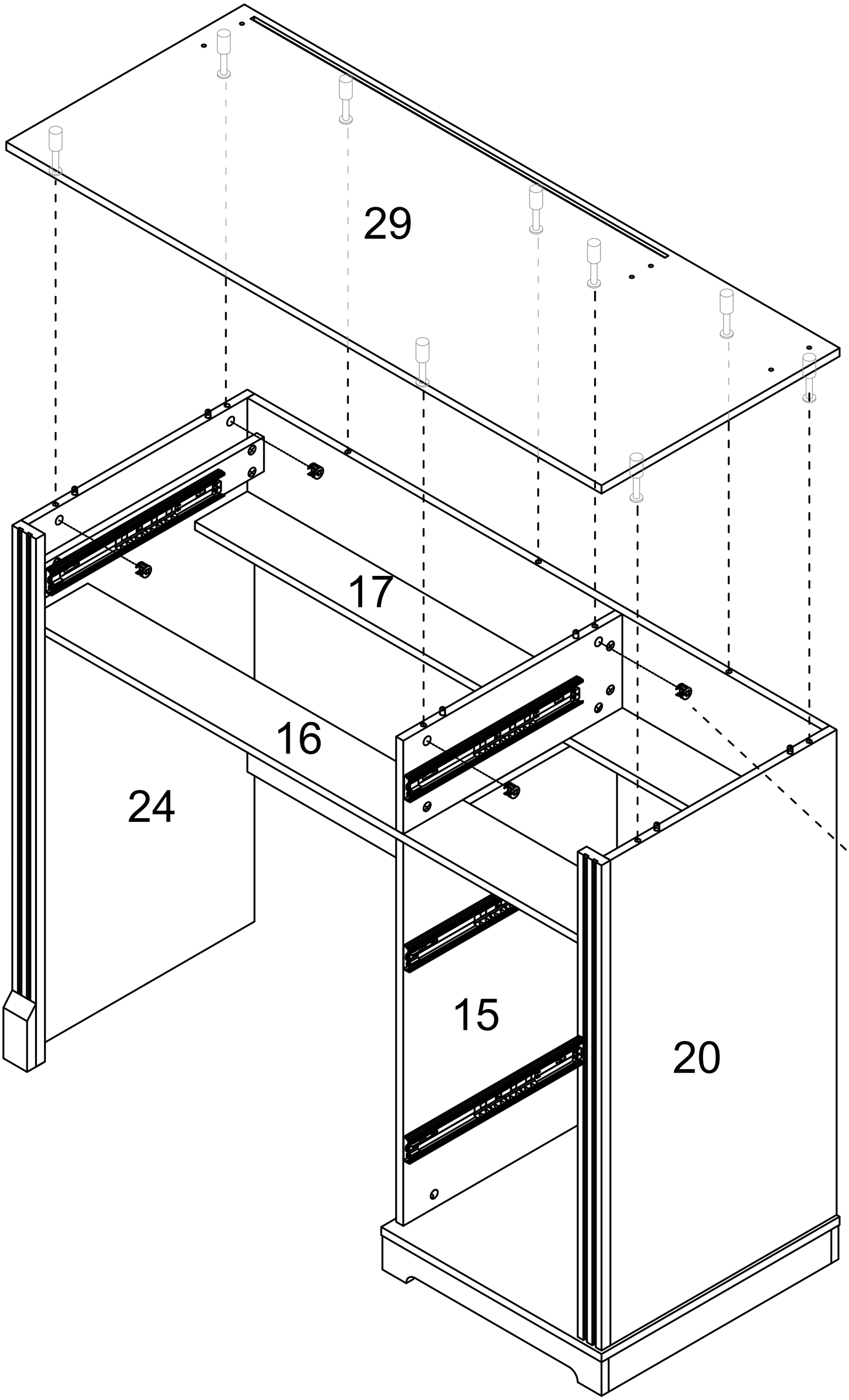

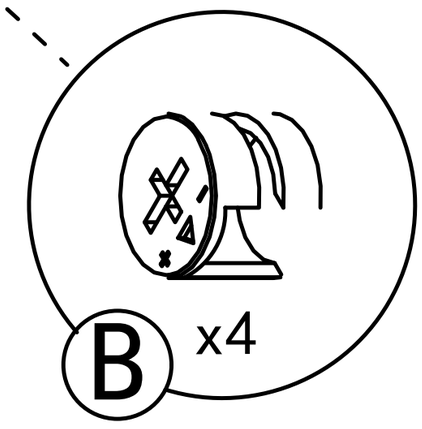

Step 68

B x2

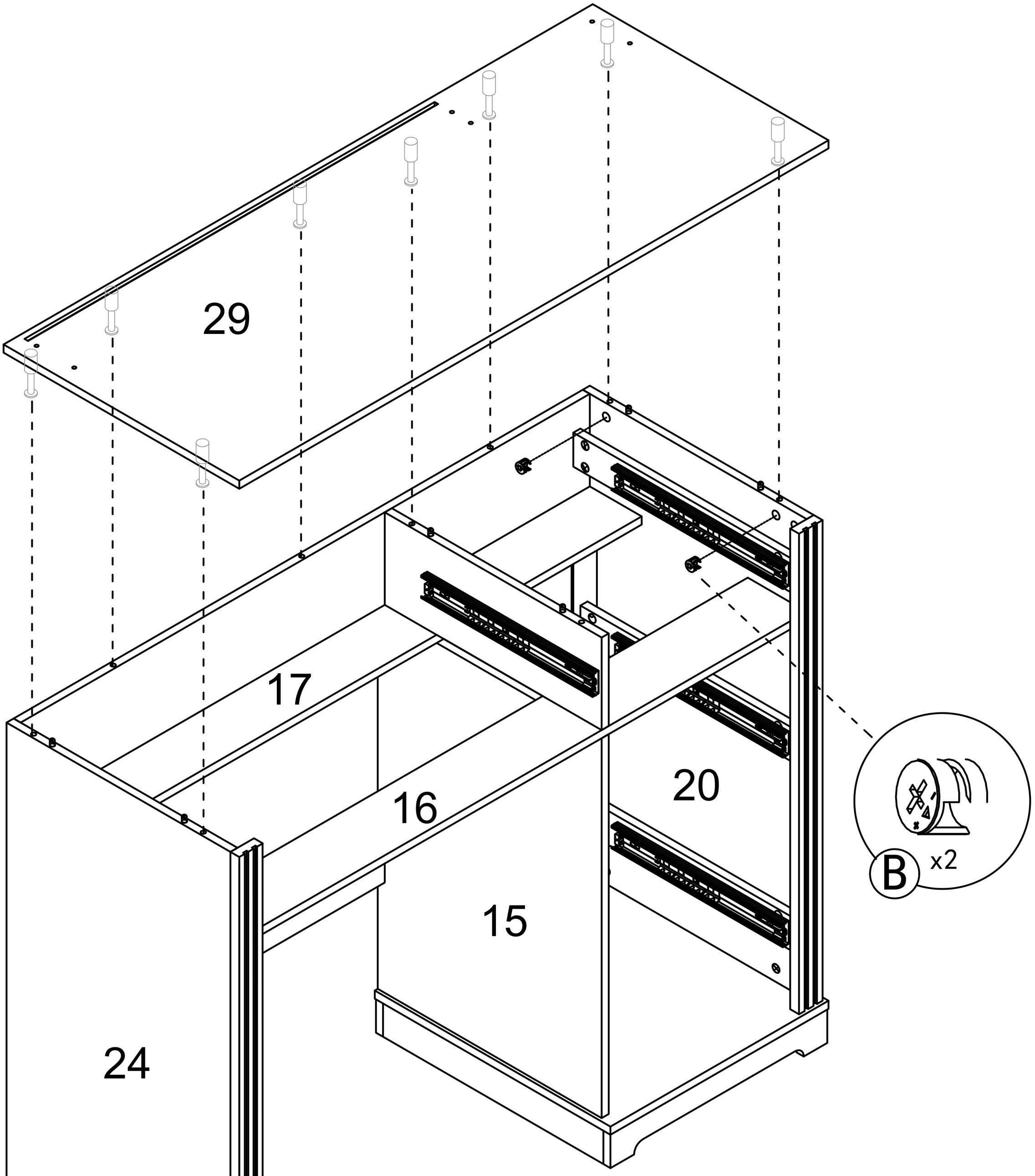

Step 69

A x6

B x3

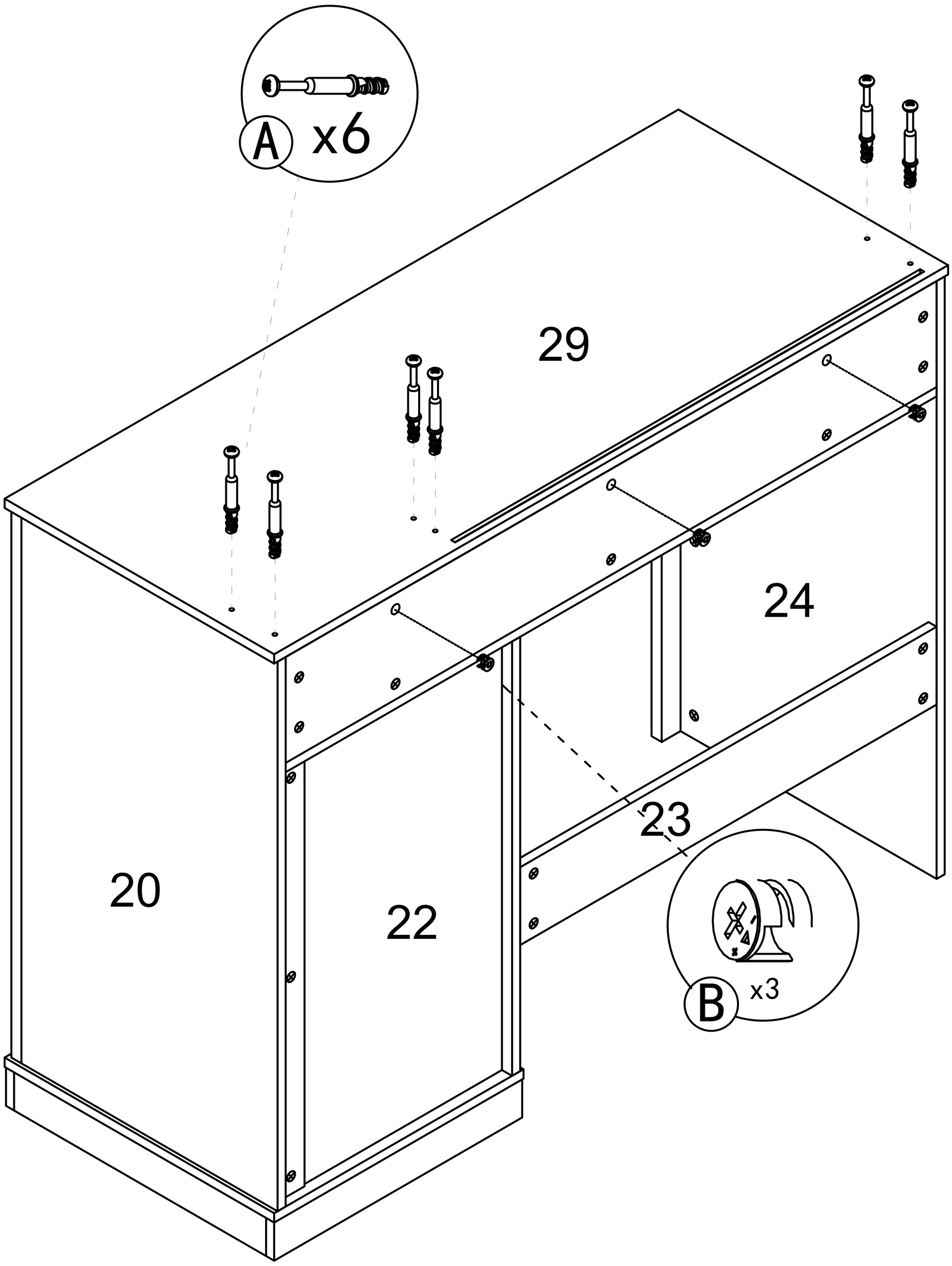

Step 70

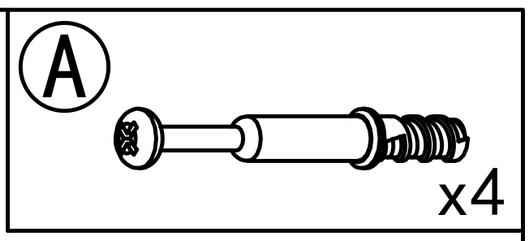

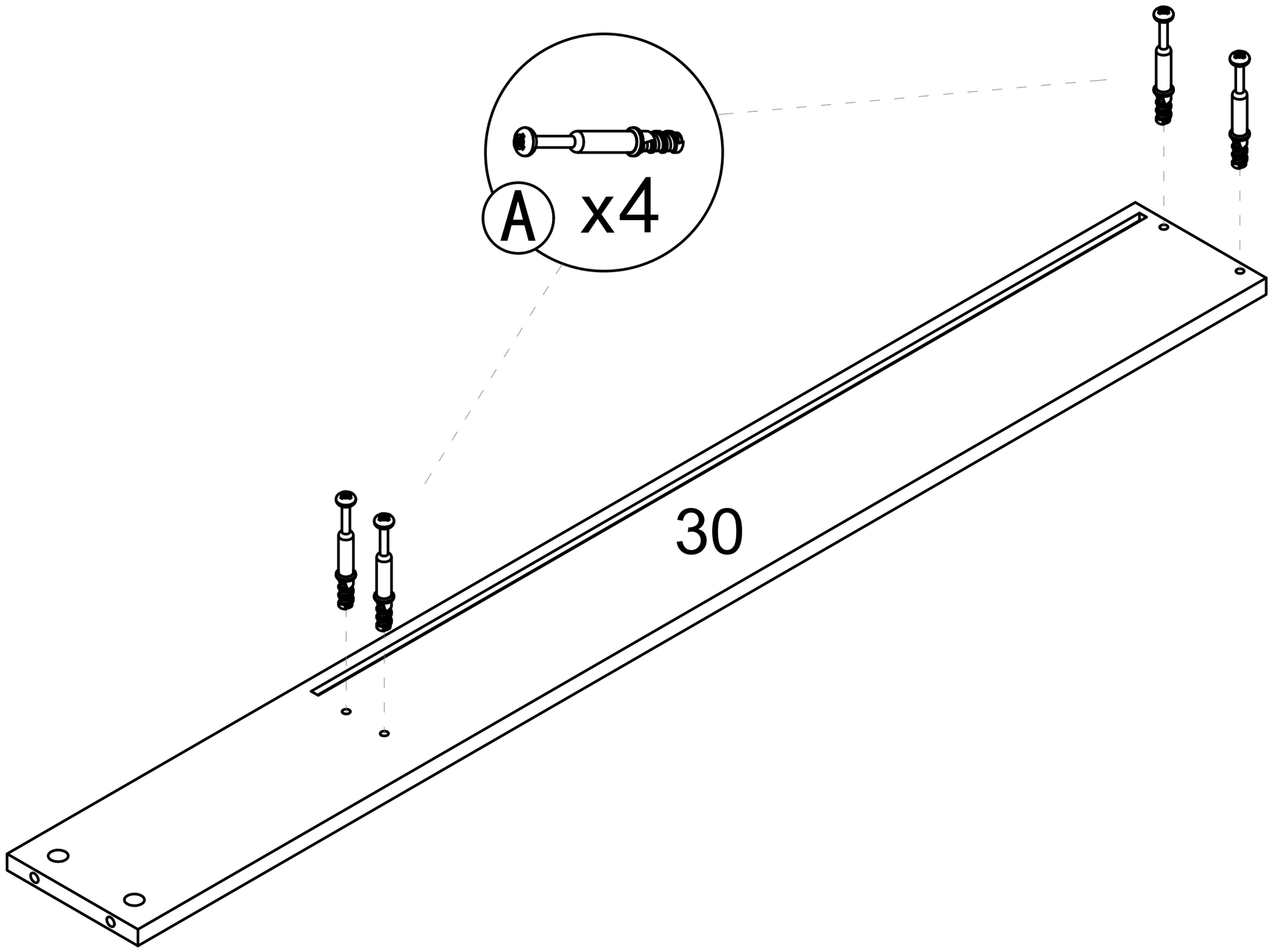

Step 71

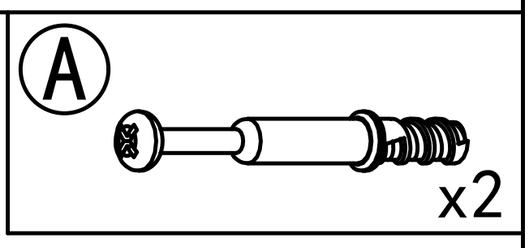

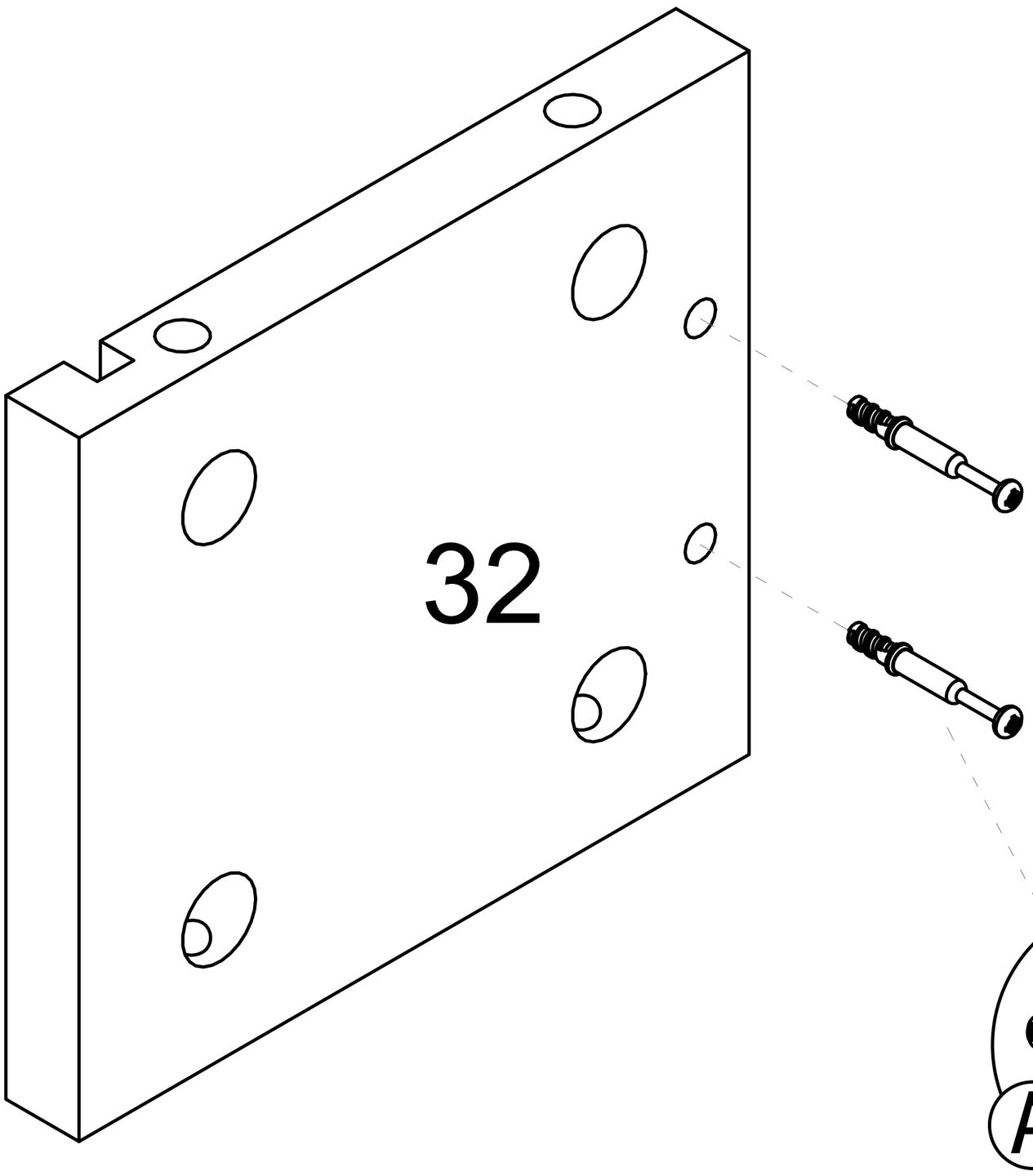

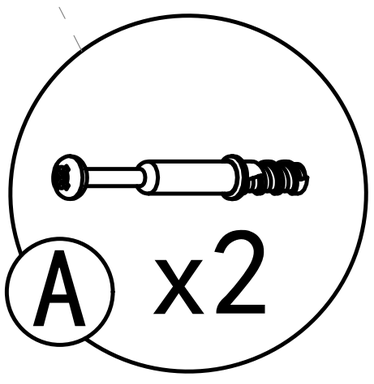

Step 72

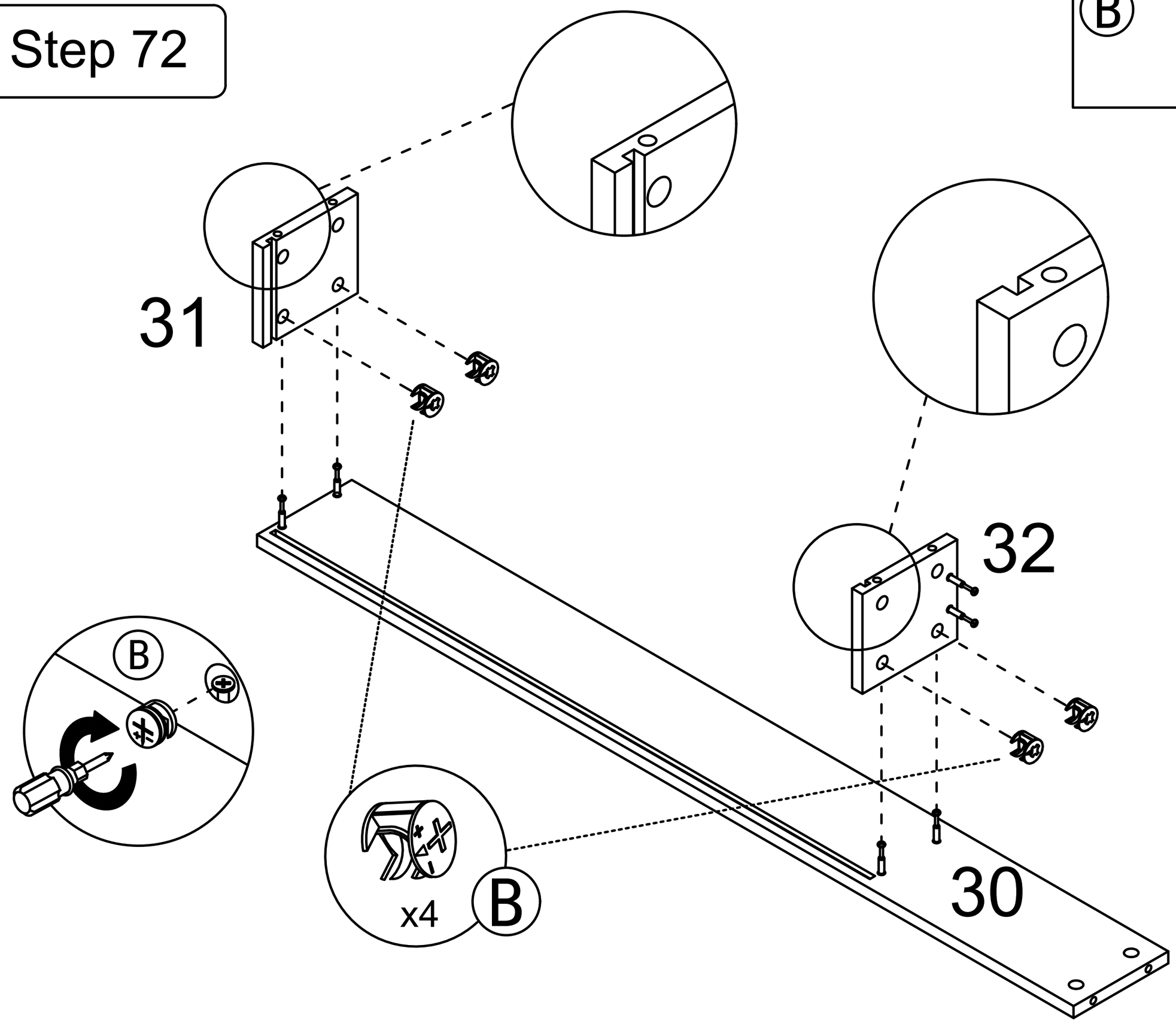

Step 73

Step 74

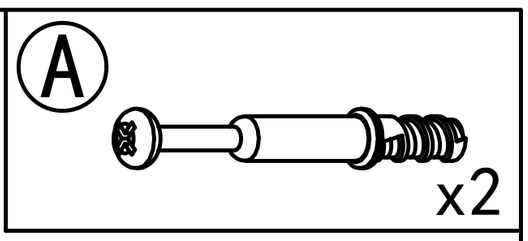

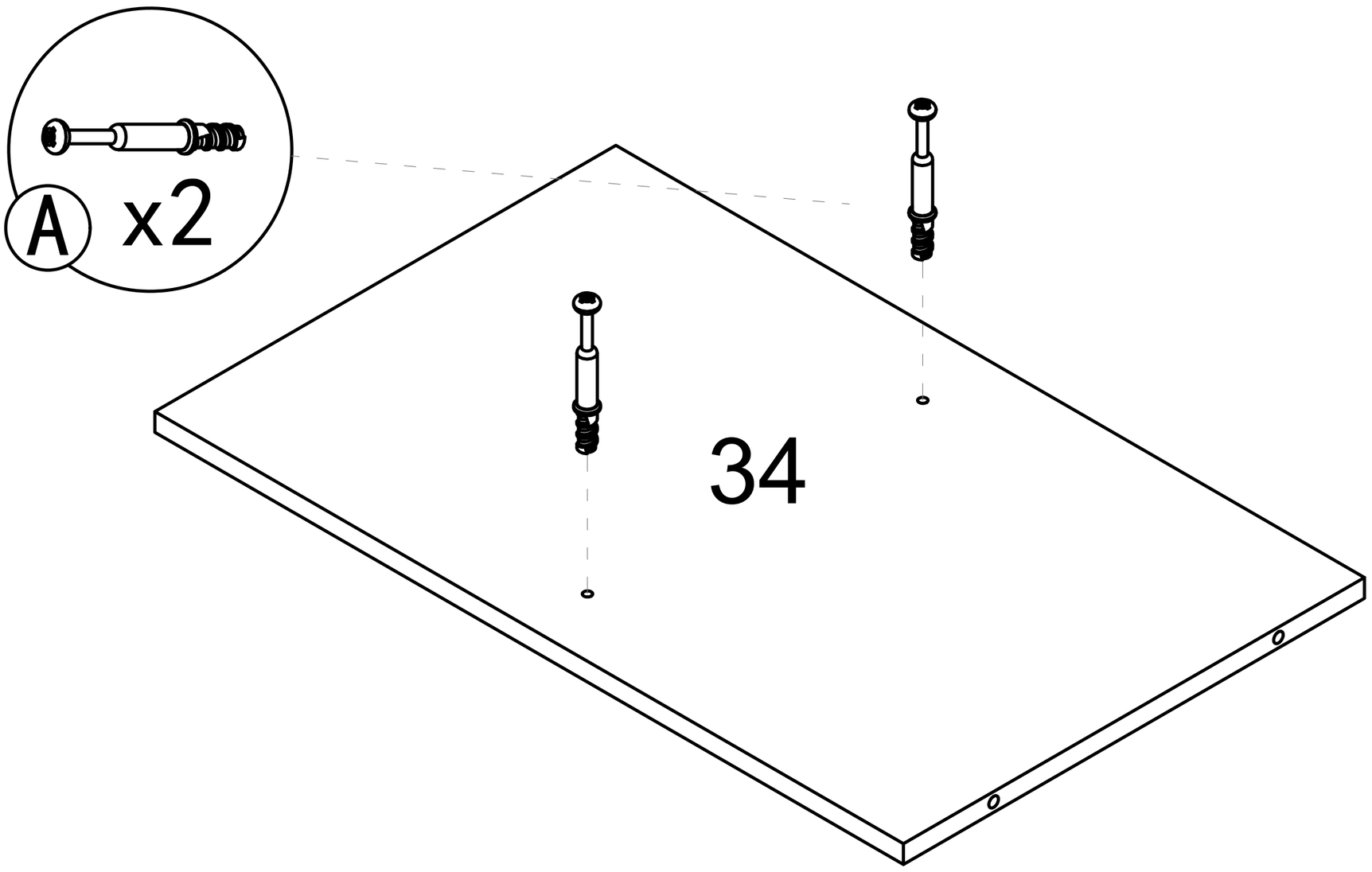

Step 75

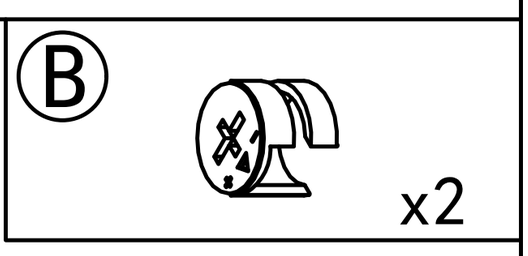

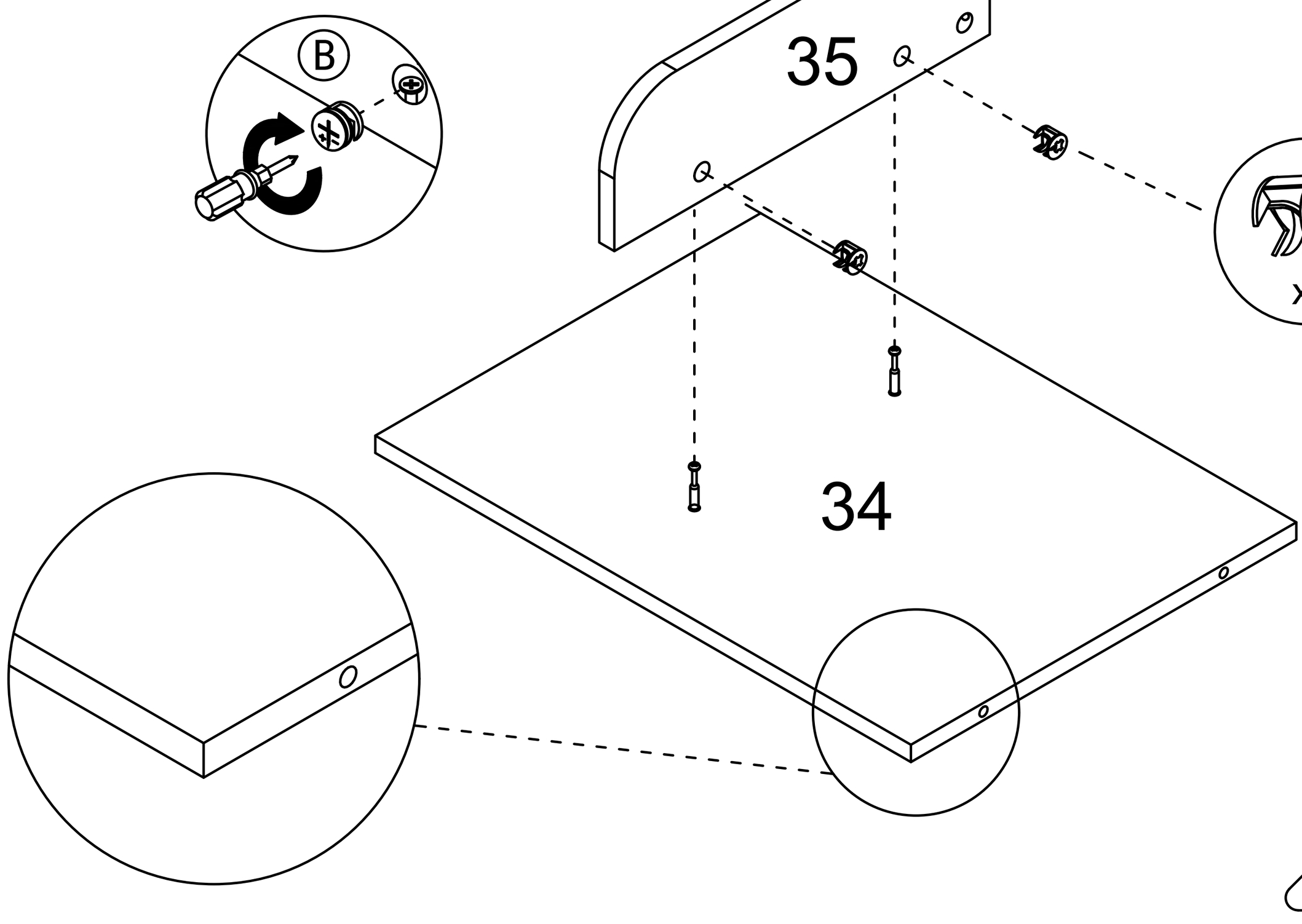

Step 76

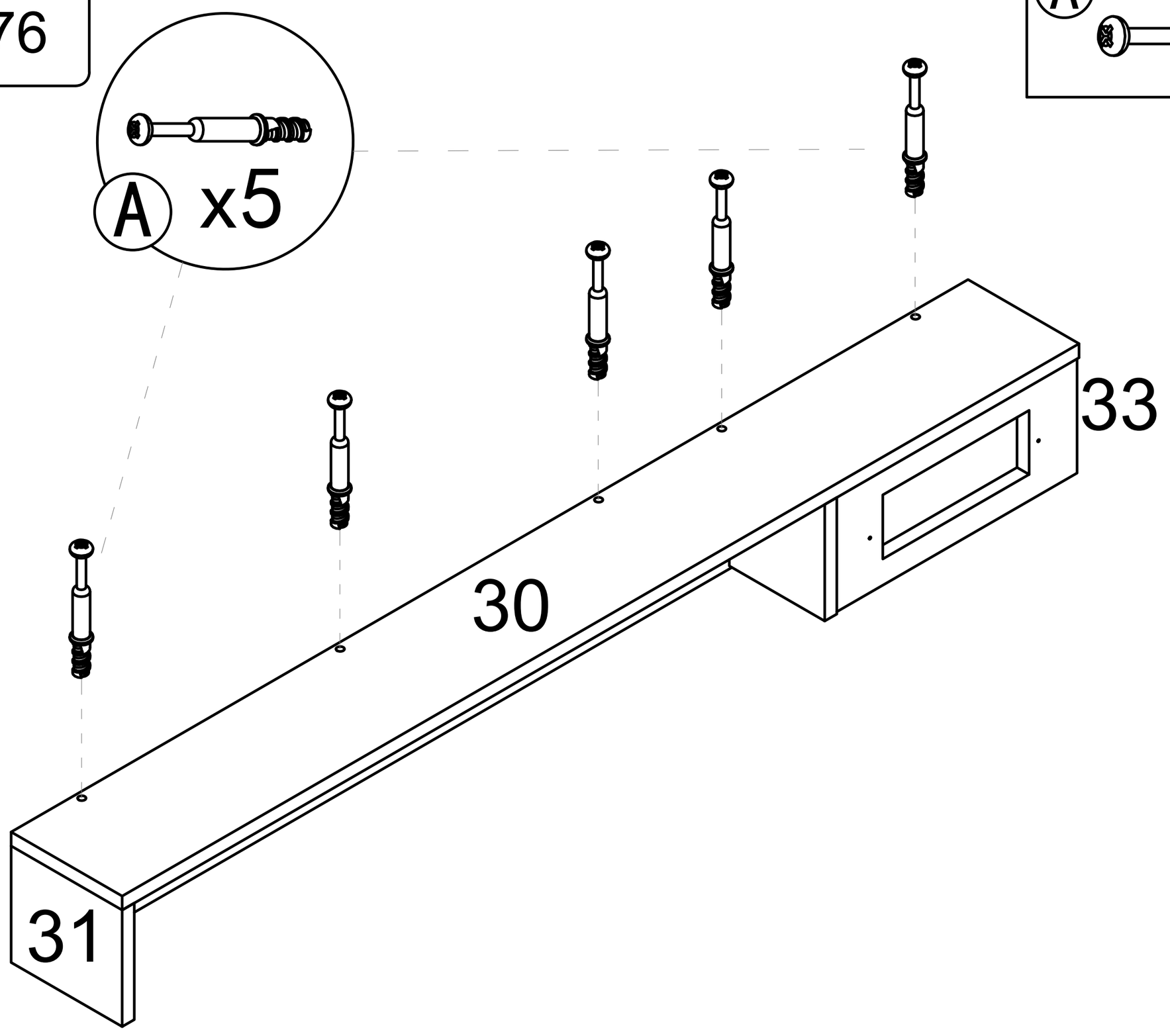

Step 77

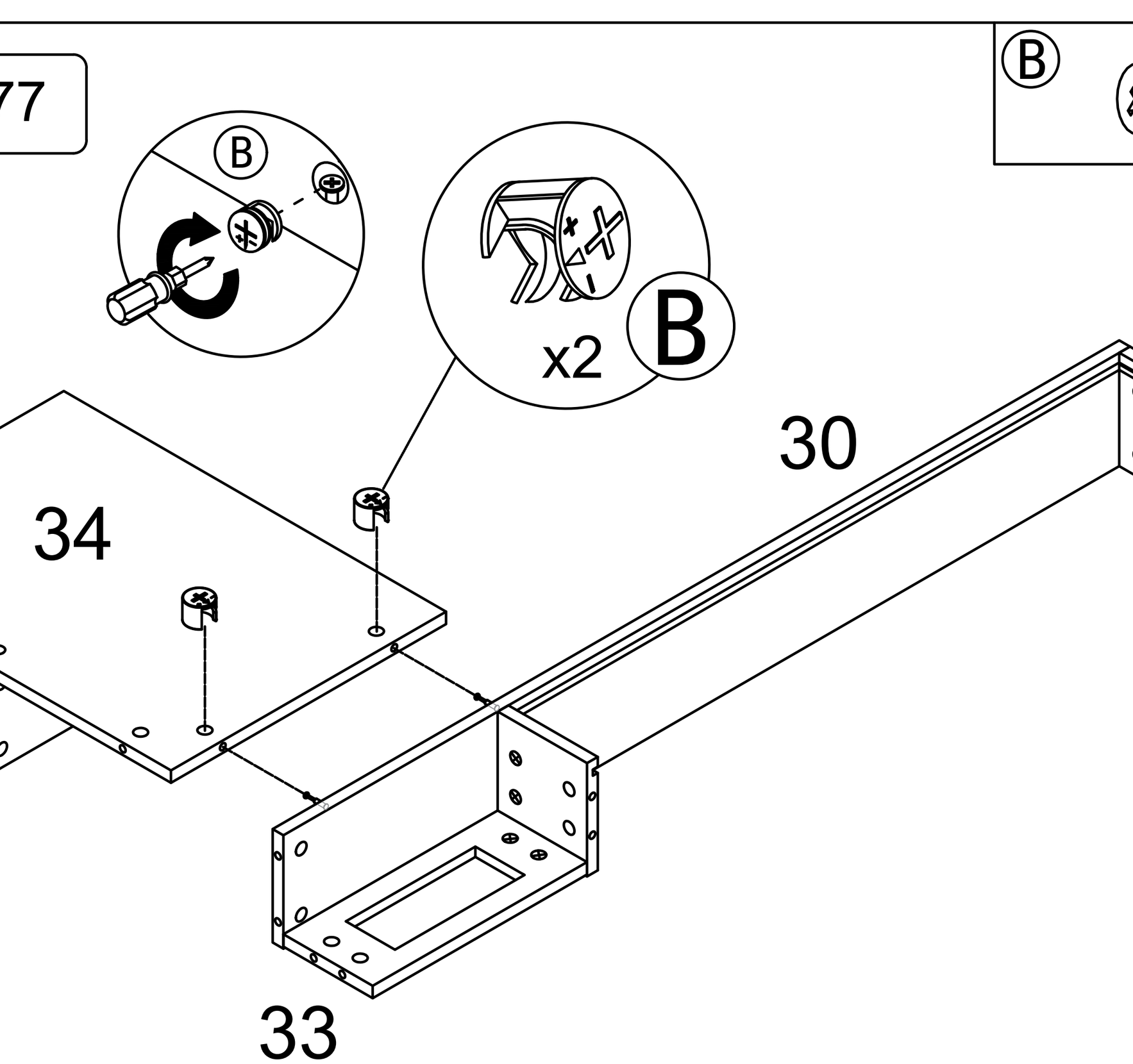

Step 78

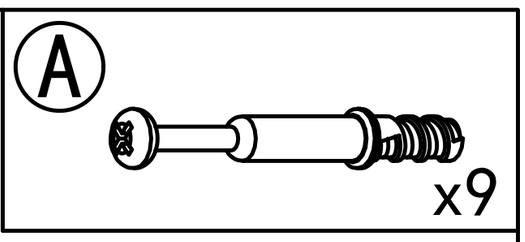

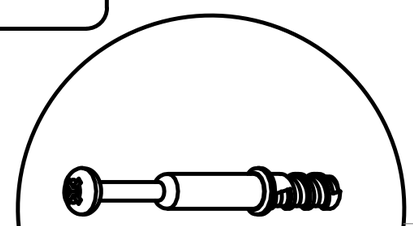

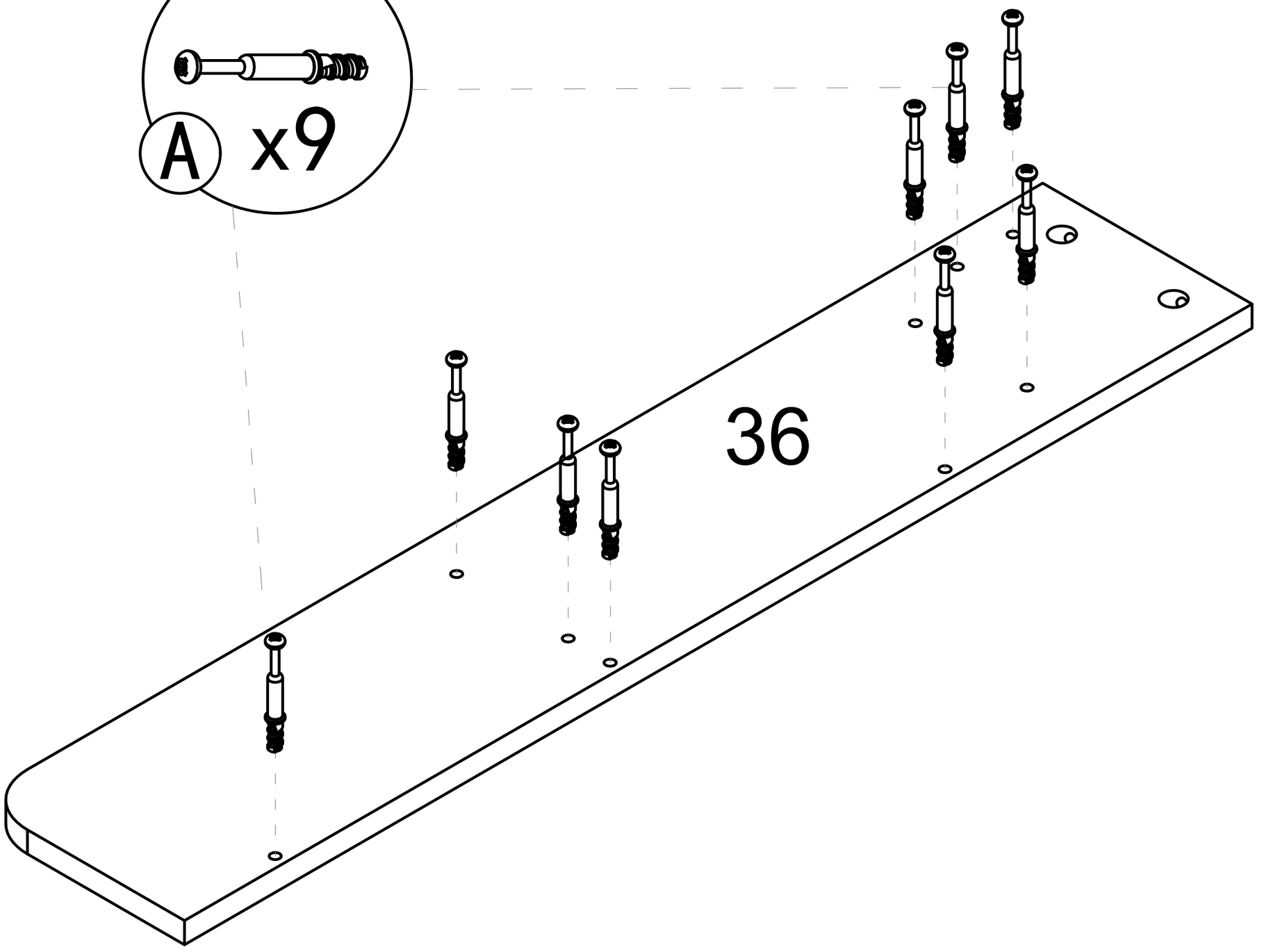

Step 79

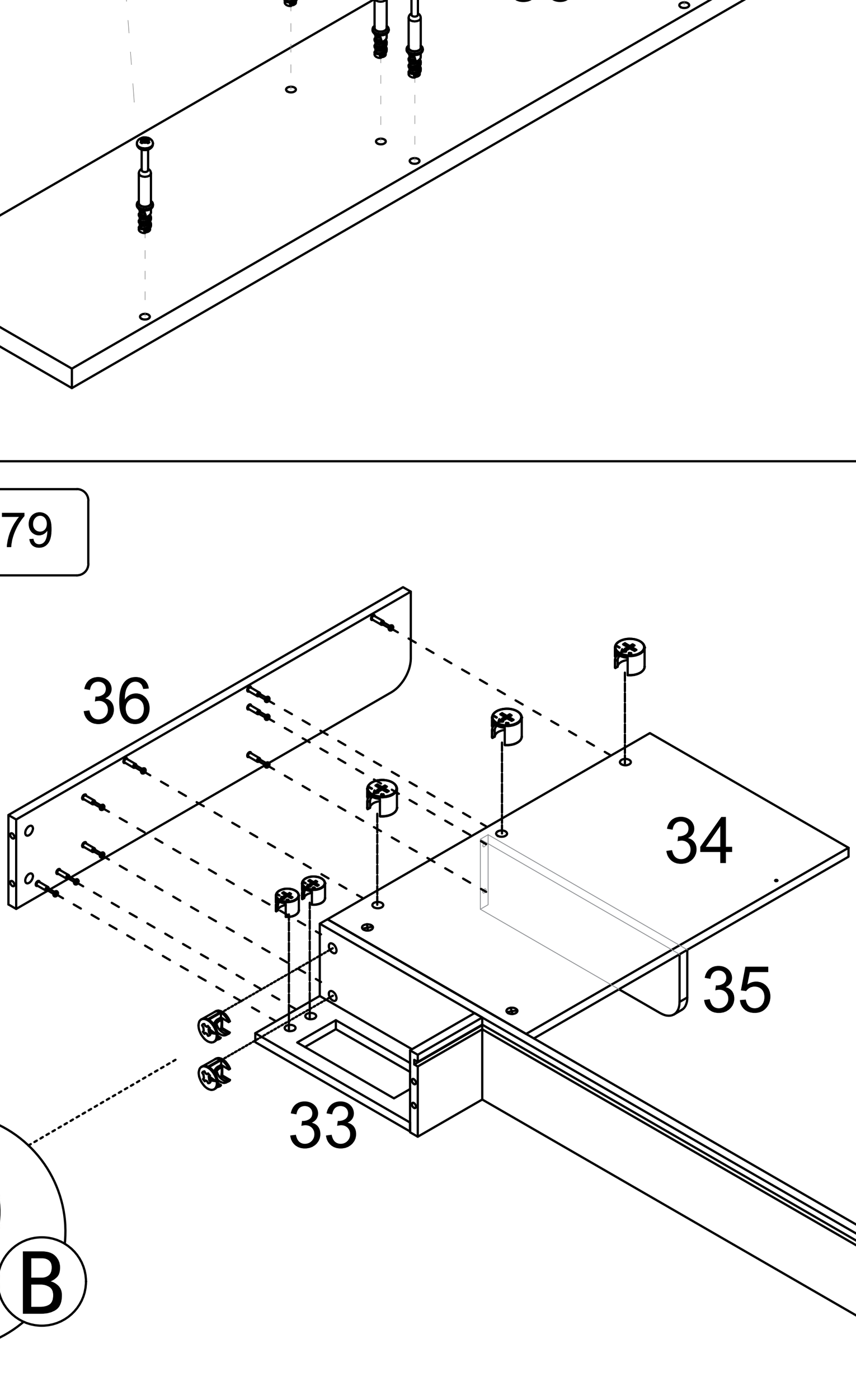

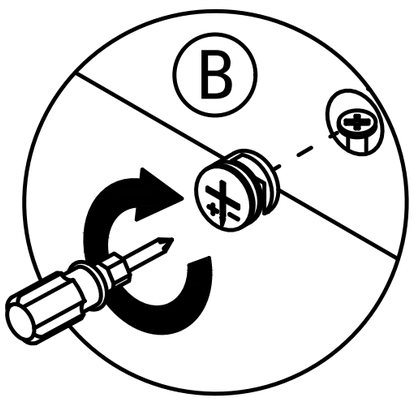

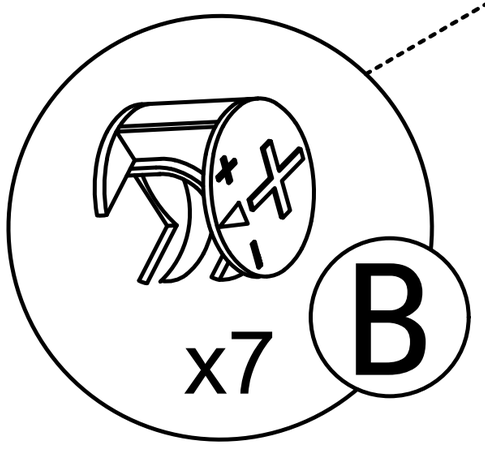

Step 80

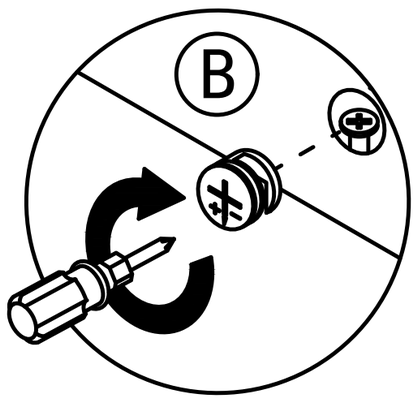

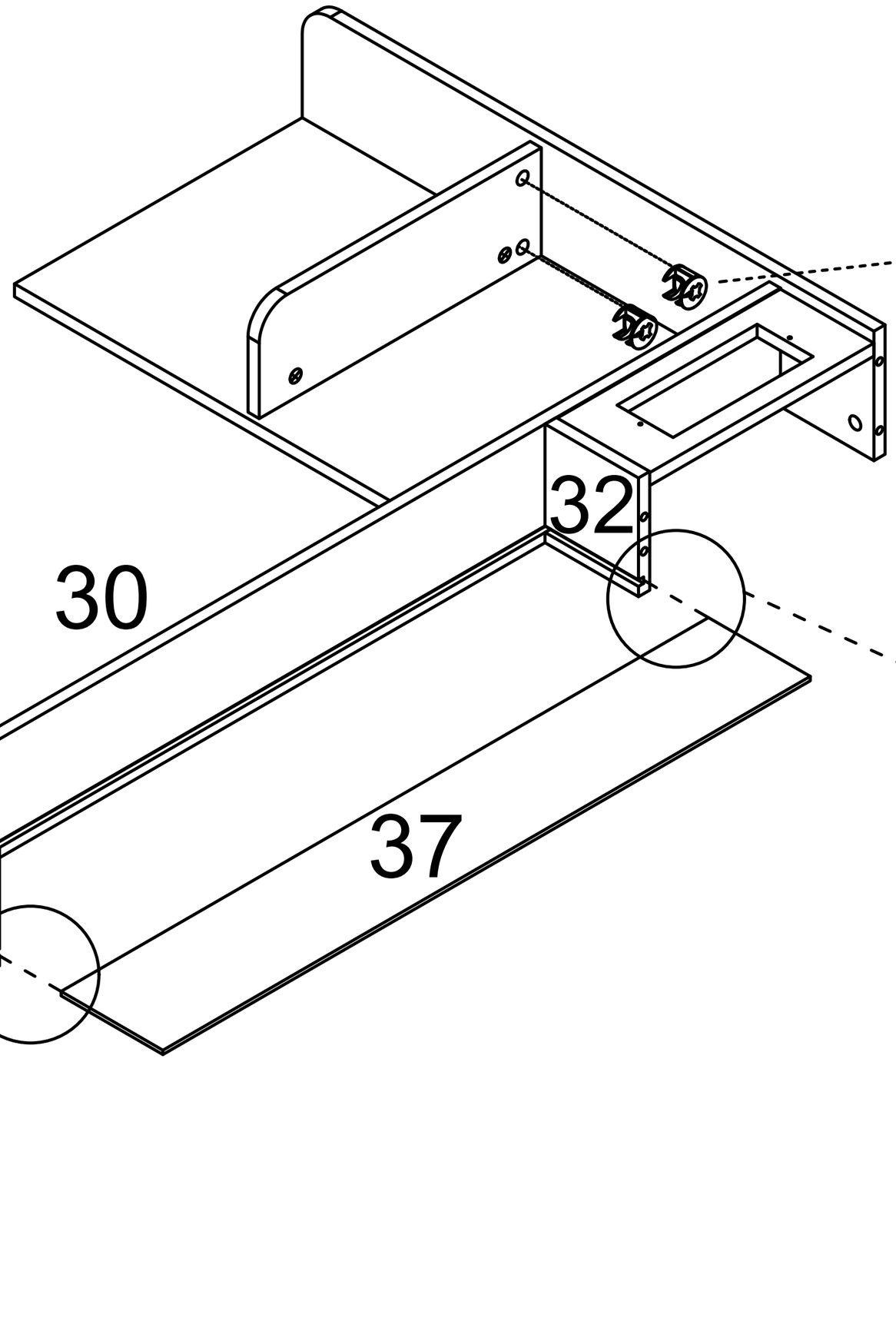

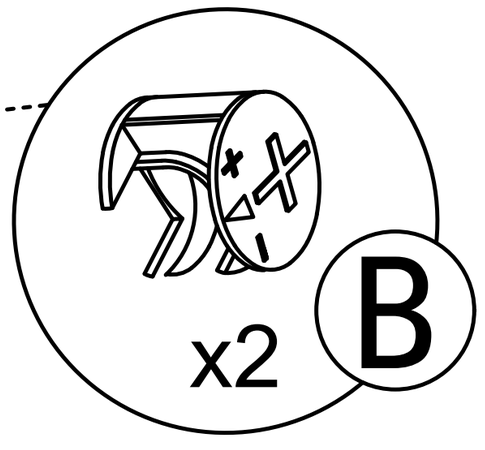

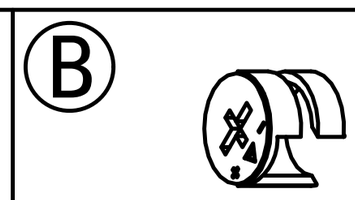

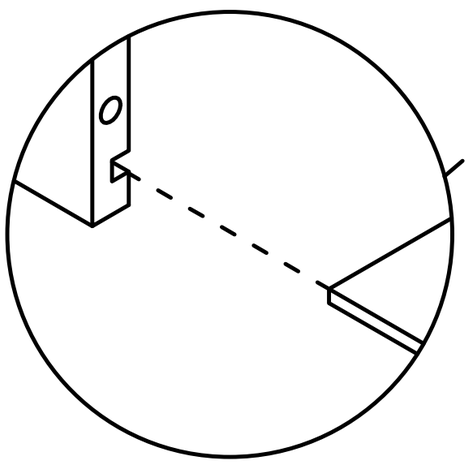

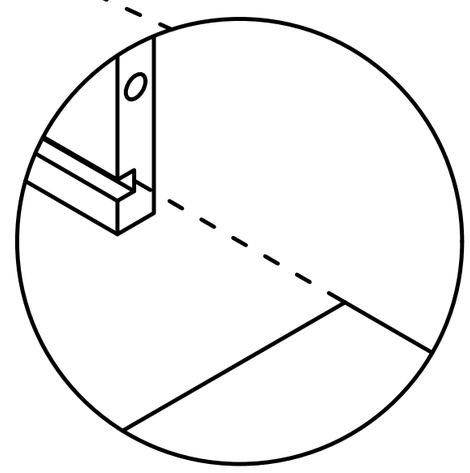

Step 81

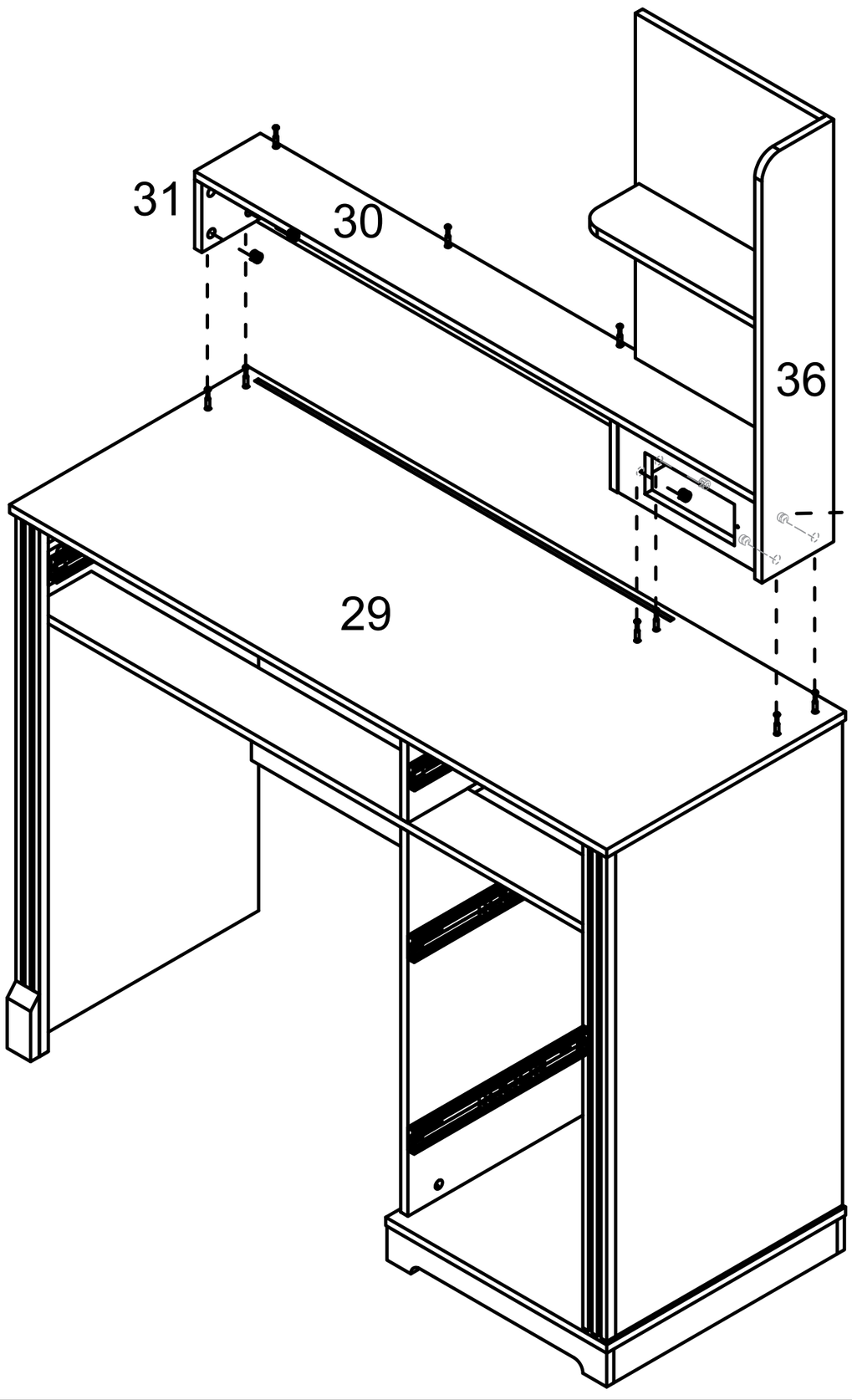

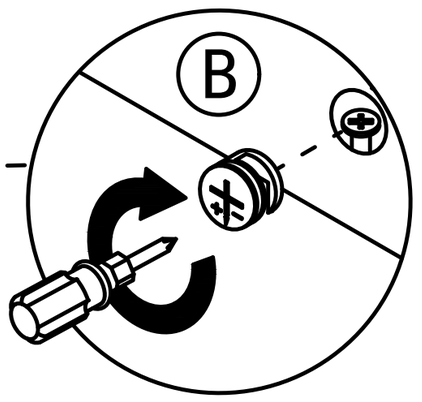

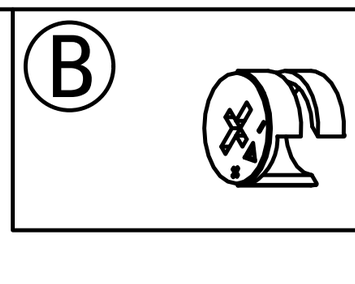

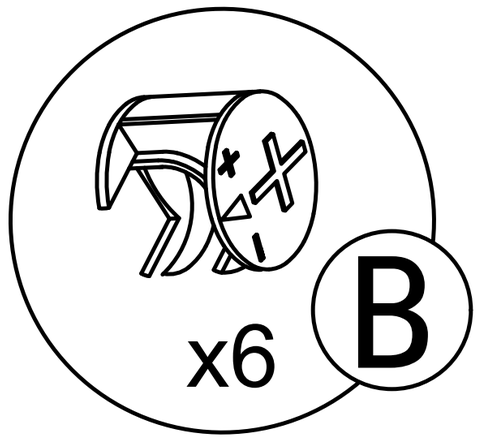

Step 82

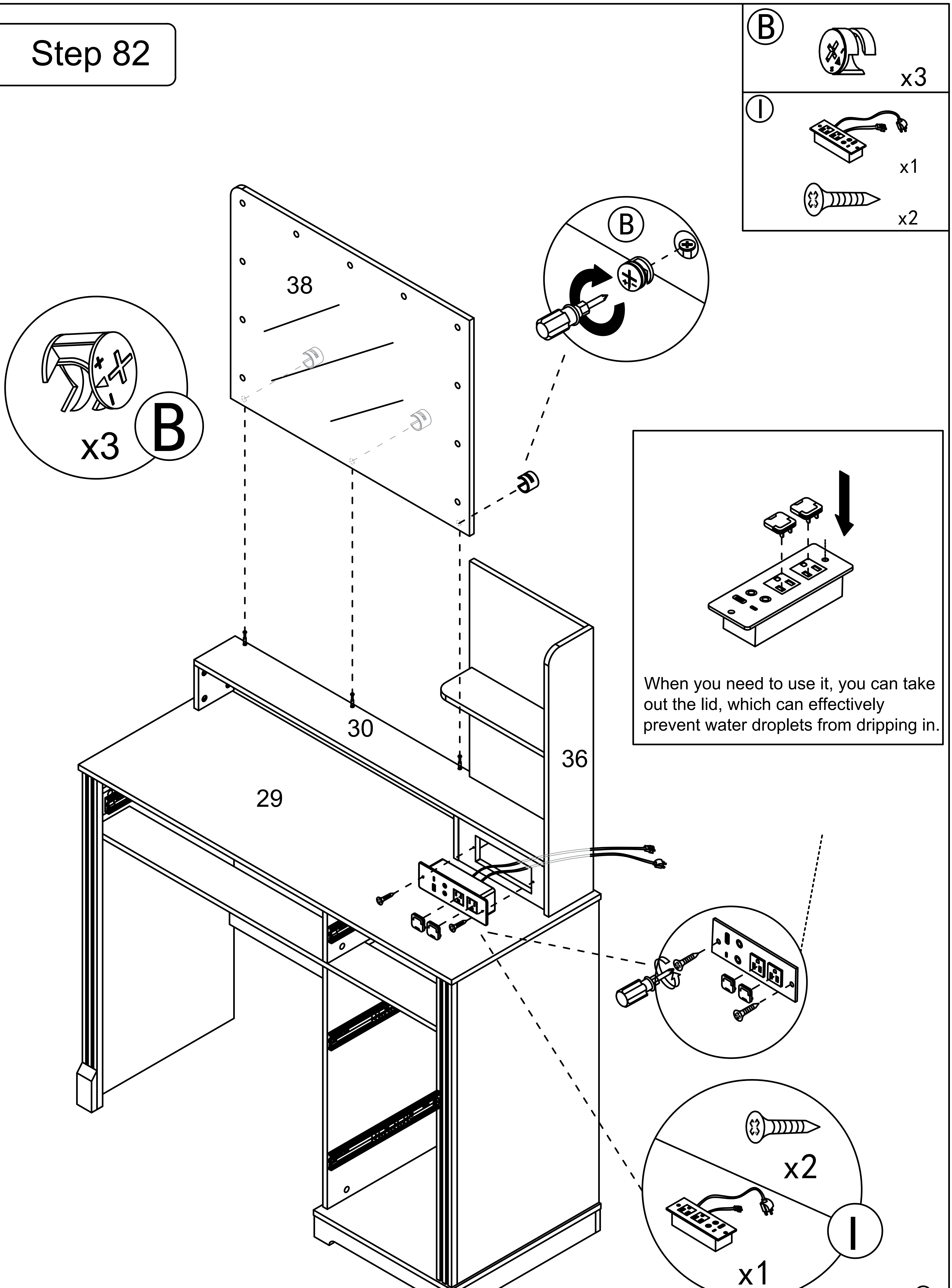
B
x3
I
x1
x2
38
B
x3
B
30
36
29
When you need to use it, you can take out the lid, which can effectively prevent water droplets from dripping in.
x2
x1
I

Step 83

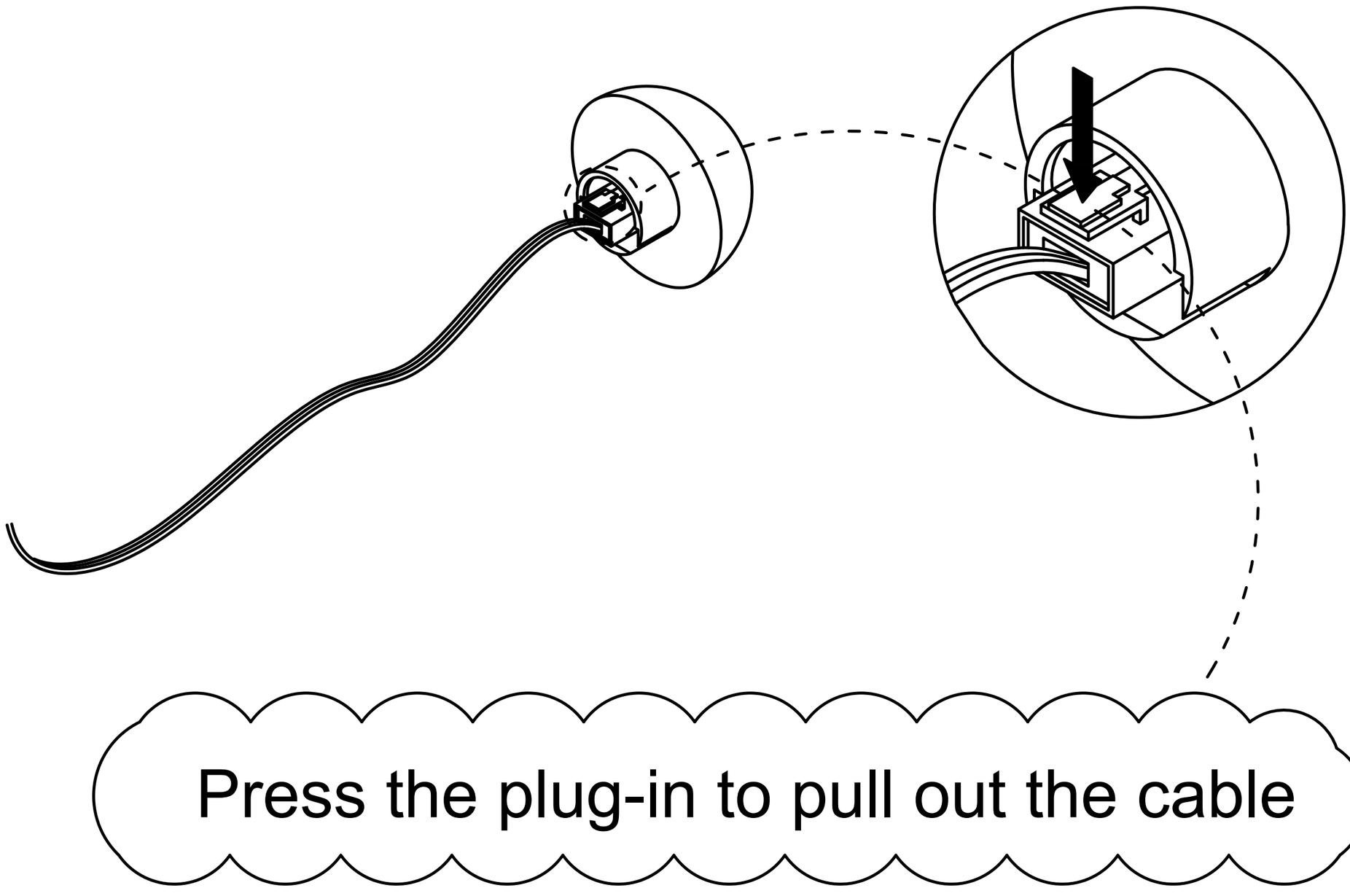

Press the plug-in to pull out the cable

Step 84

J	x1
H	x4

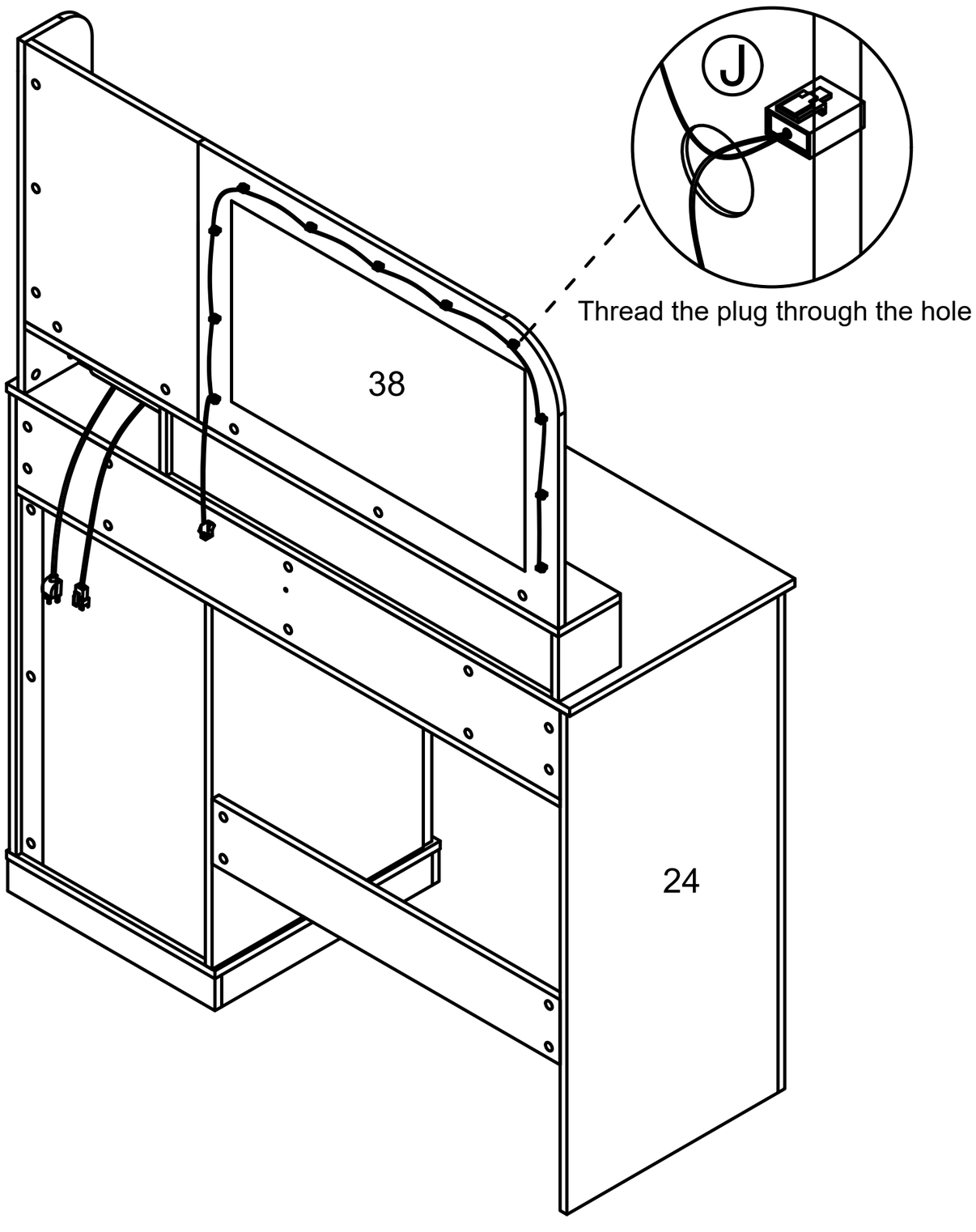

Step 85

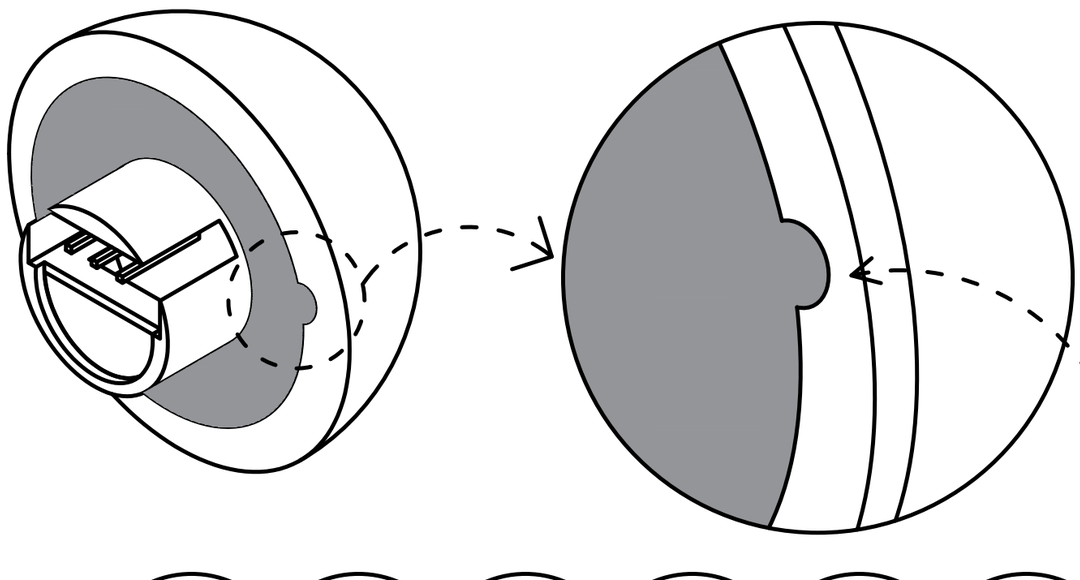

Remove the film before installation

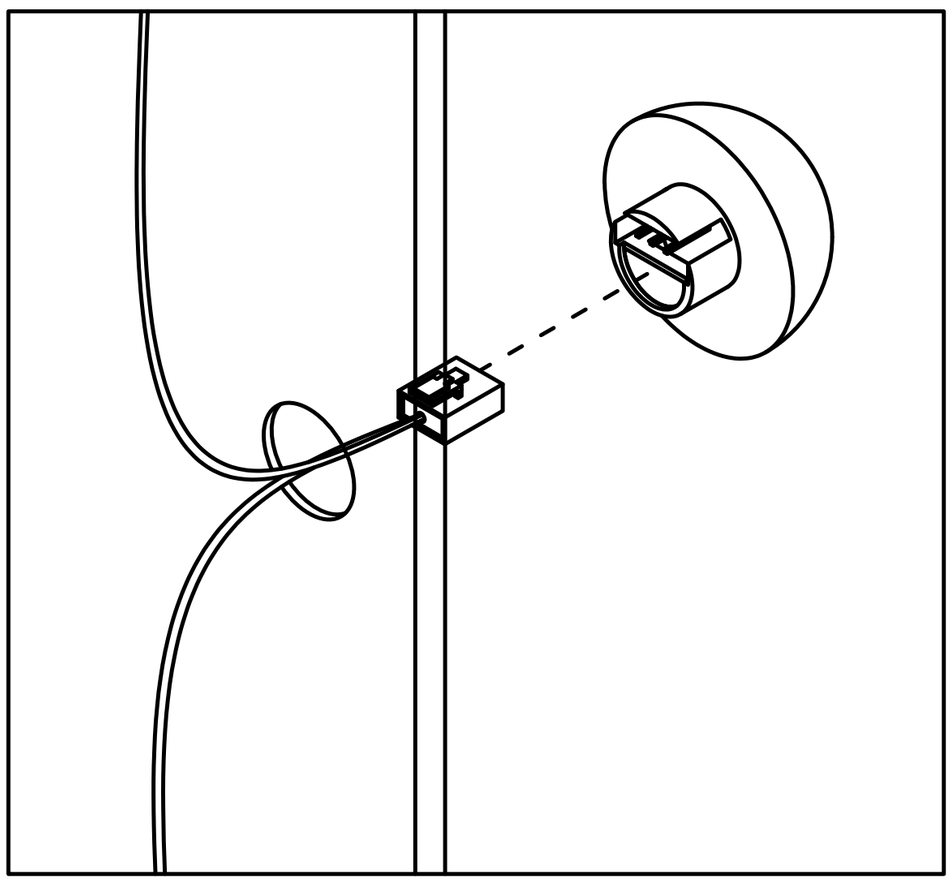

Connect the bulb to the plug

Step 86

J x11

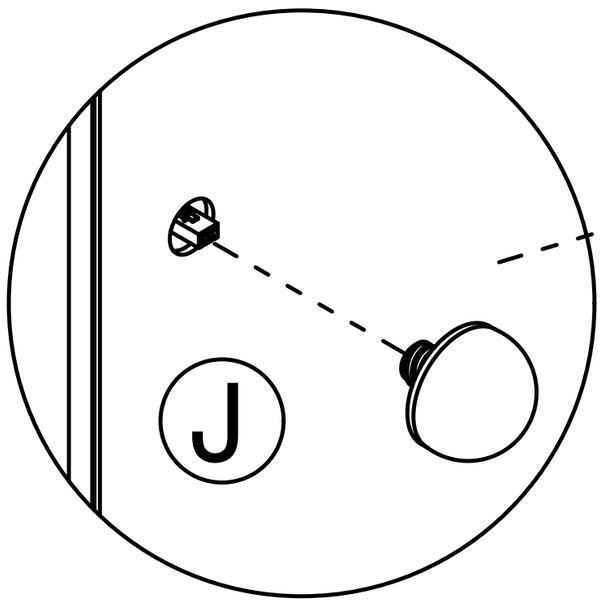

After inserting the bulb into the hole, glue the bulb to the board

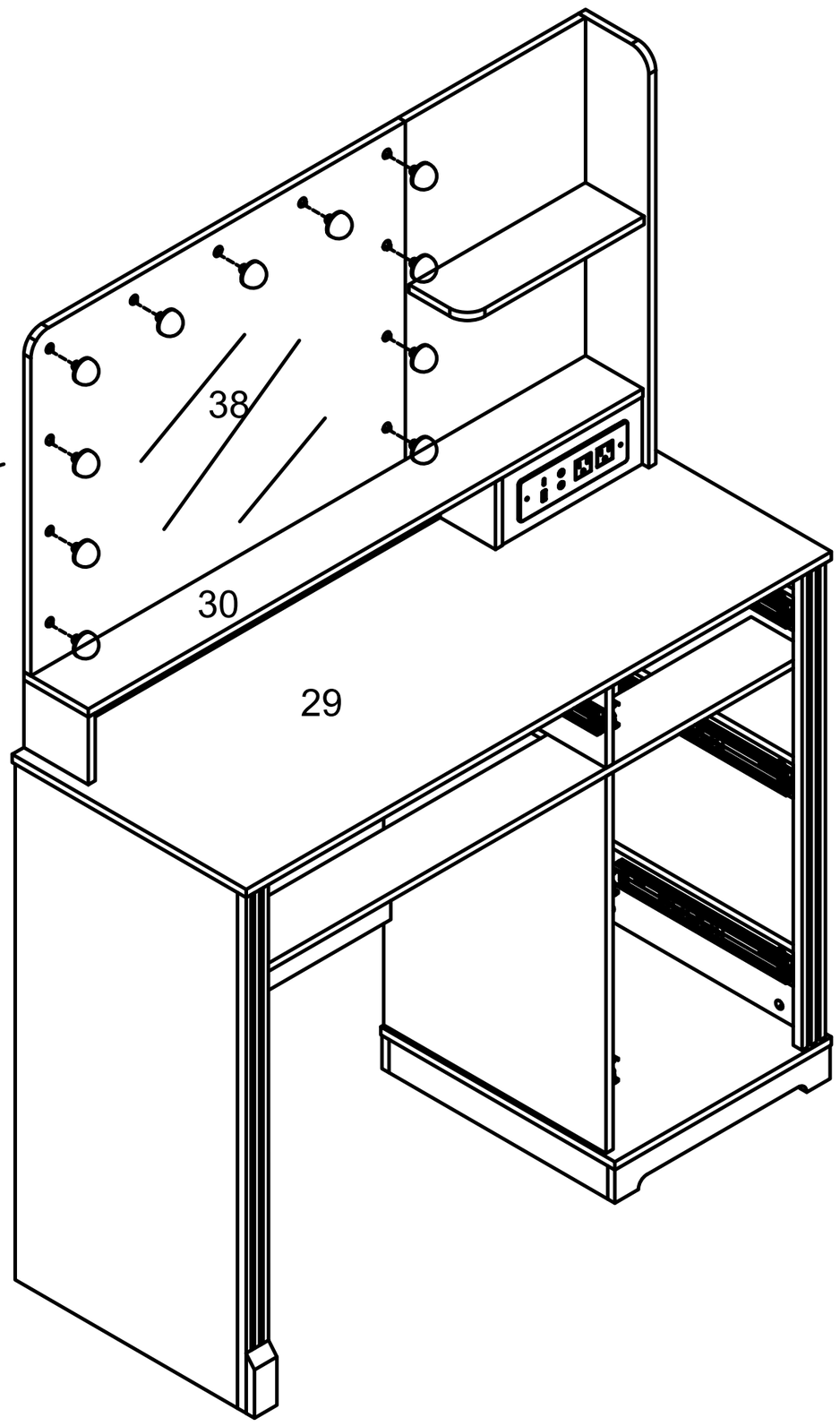

Step 87

N x1

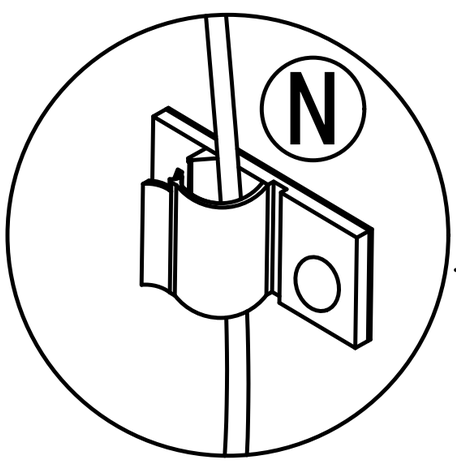

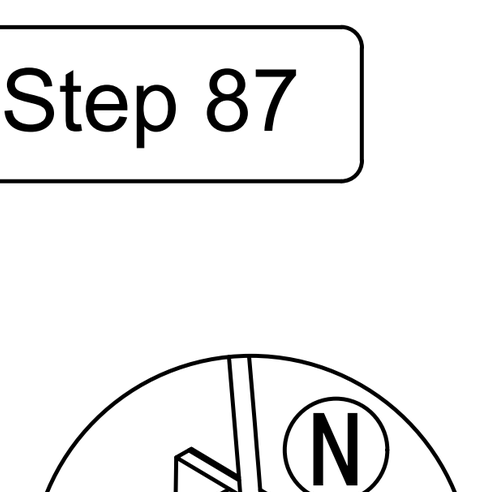

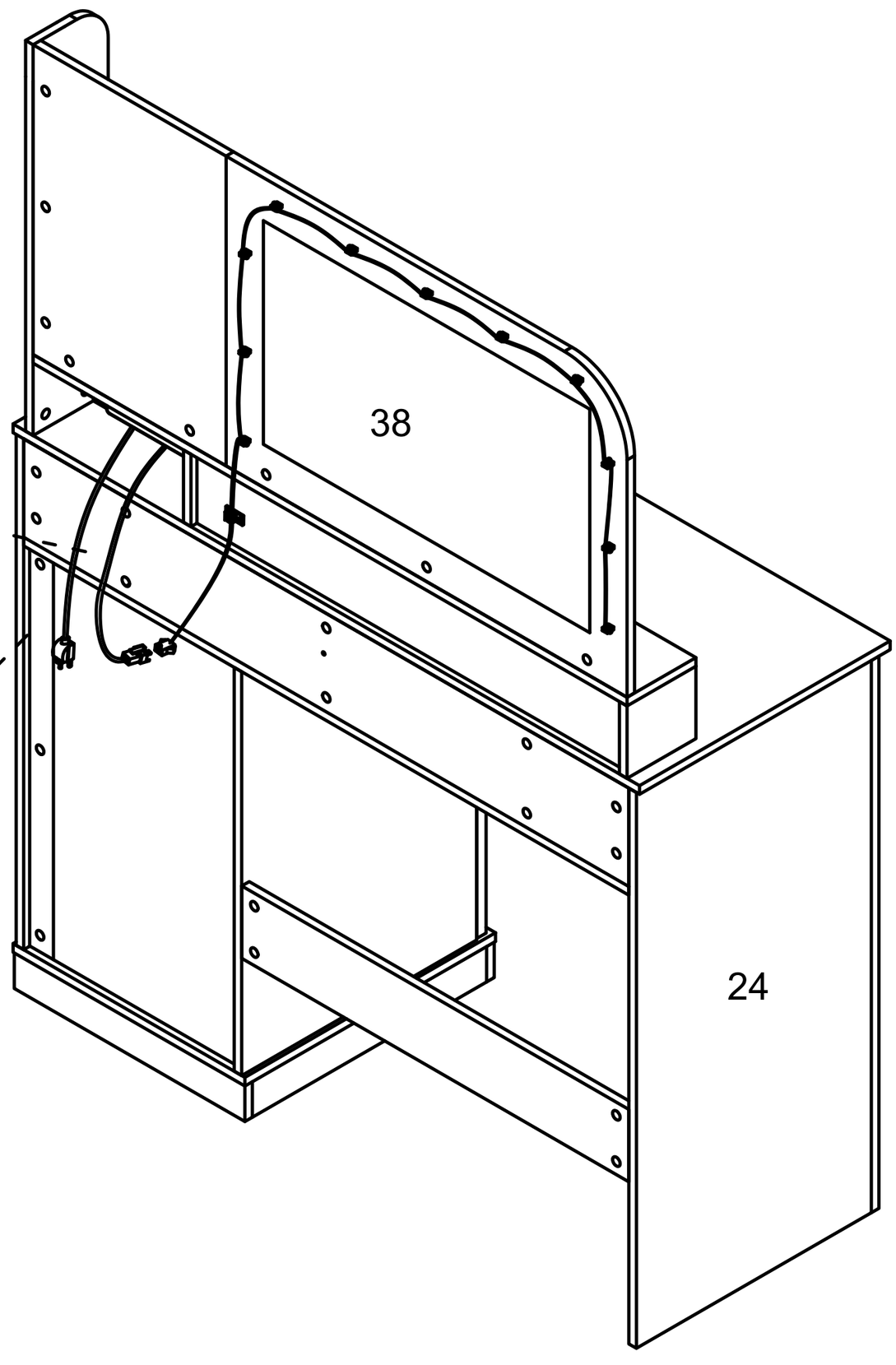

Step 86

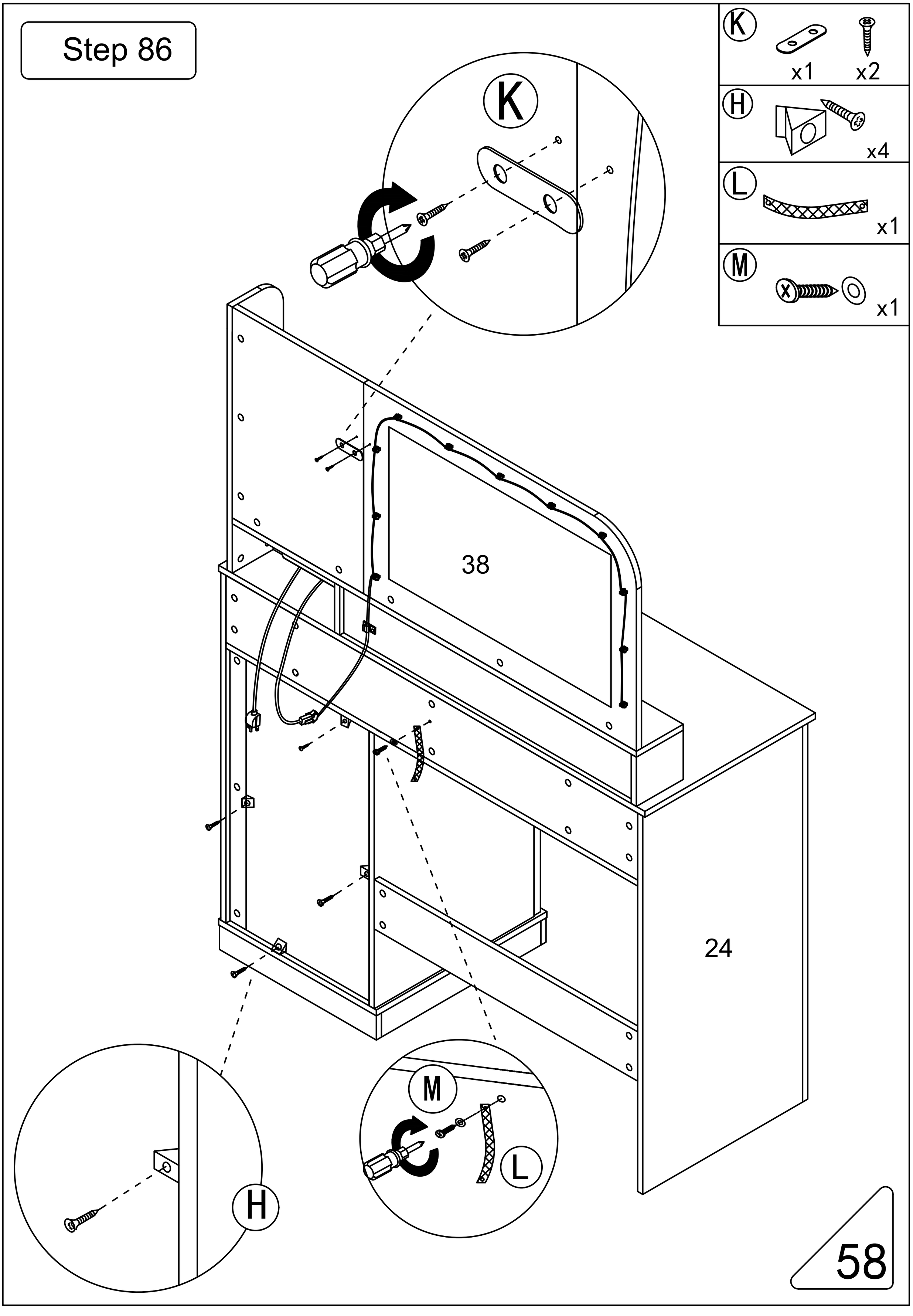

K x1 x2

H x4

L x1

M x1

Step 87

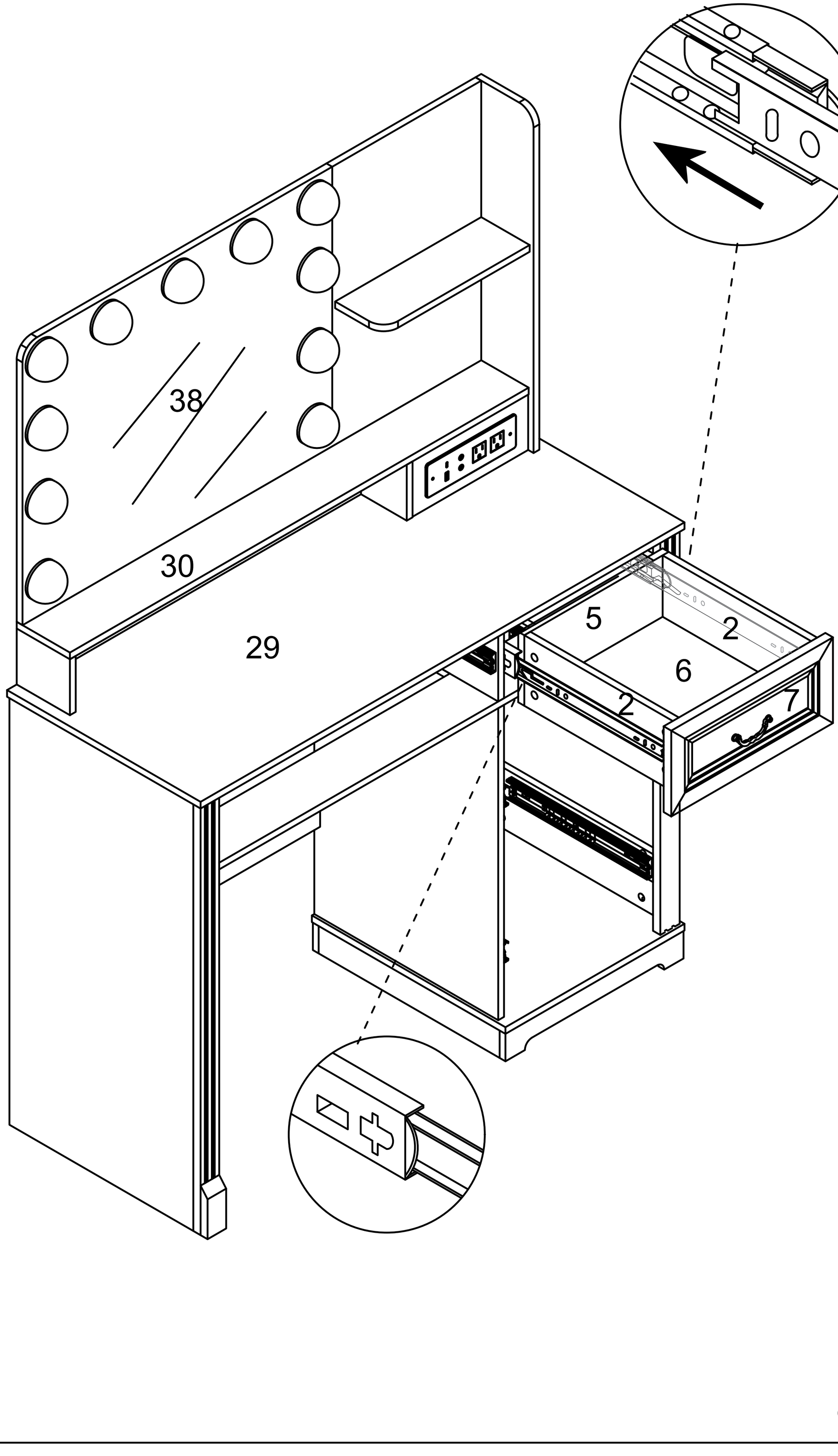

Step 88

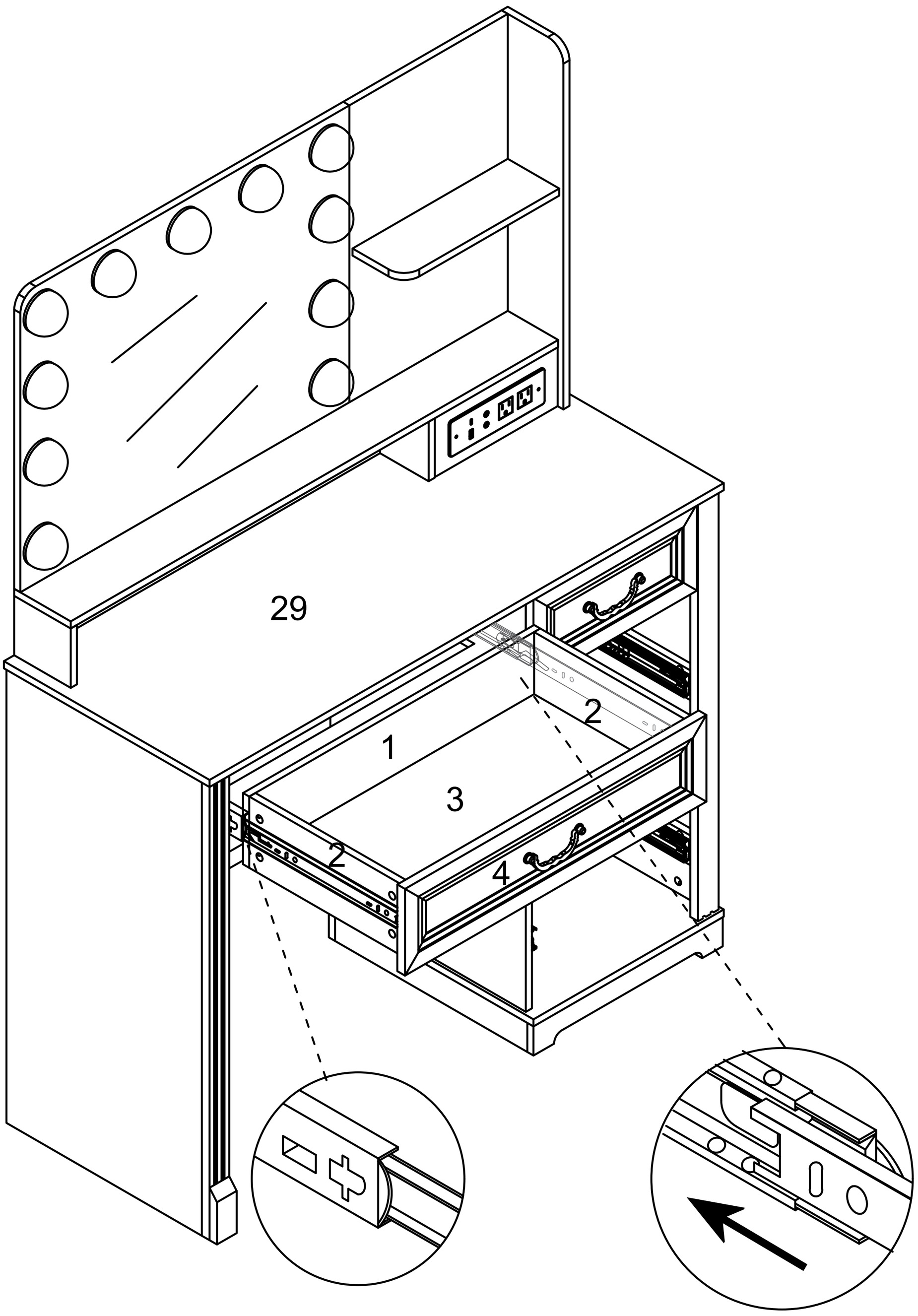

Step 89

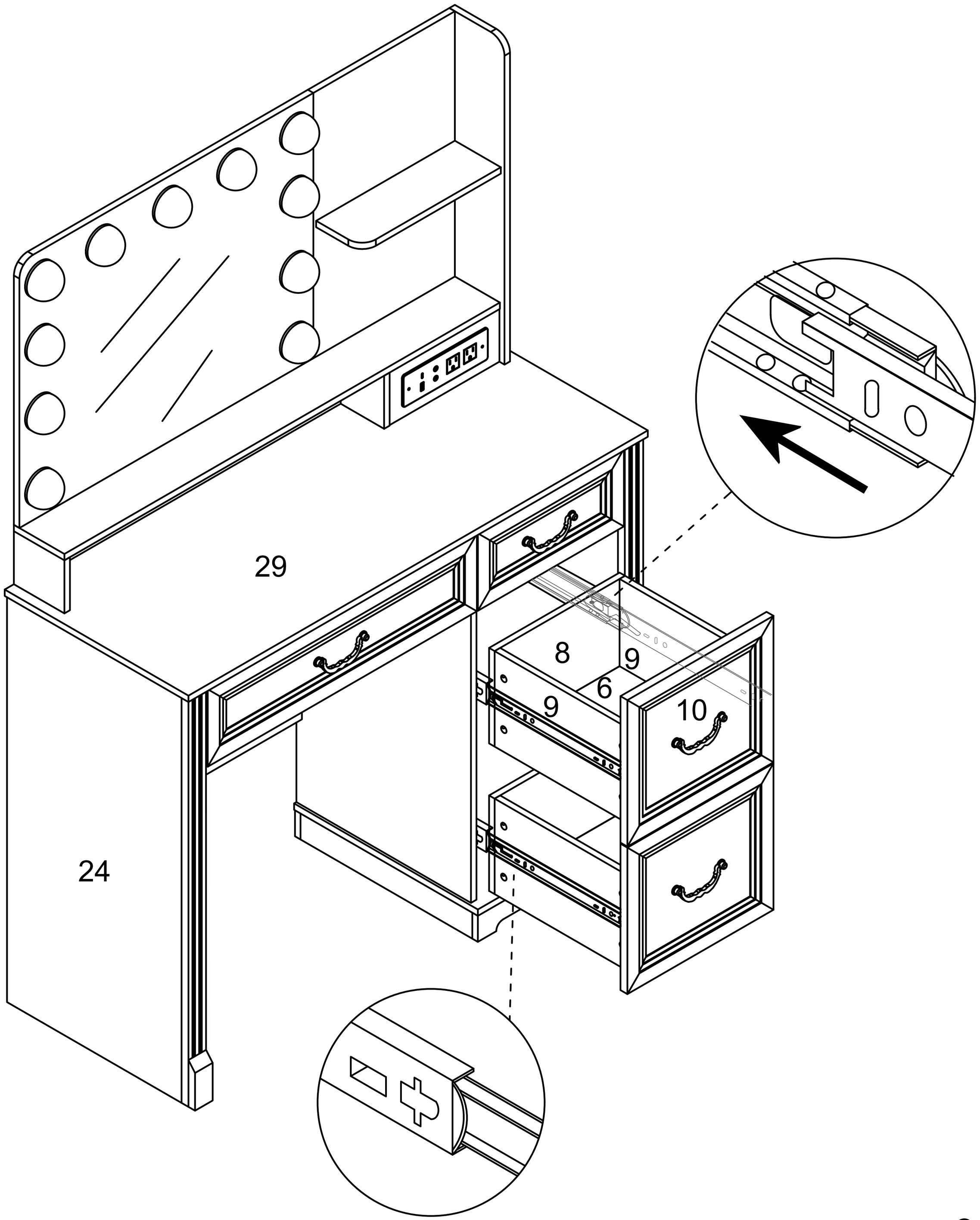

Step 90

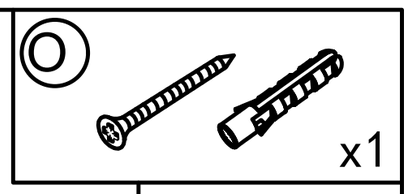

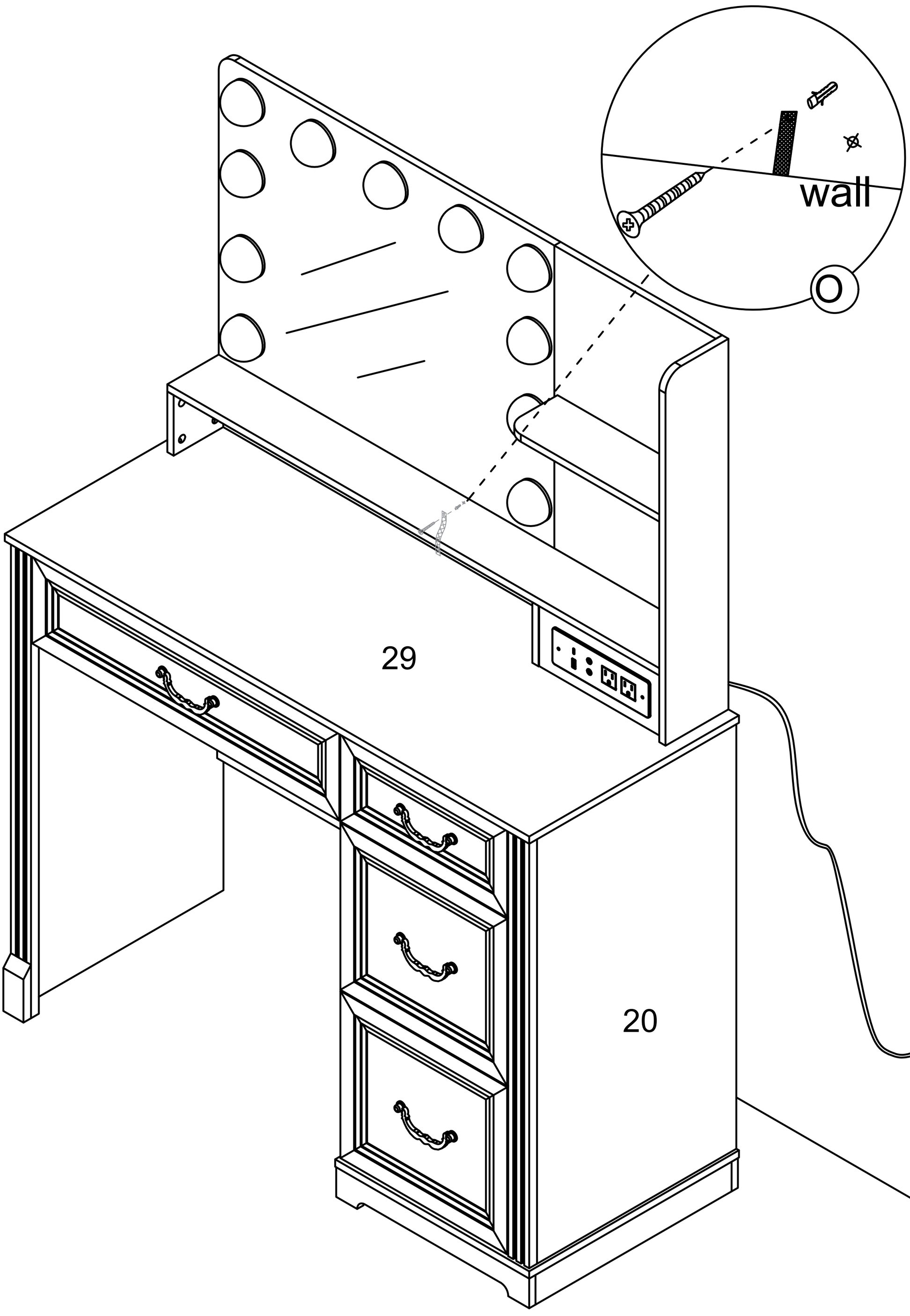

A	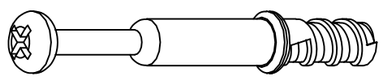	28pcs	B	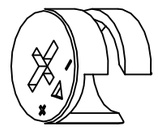	28pcs	F	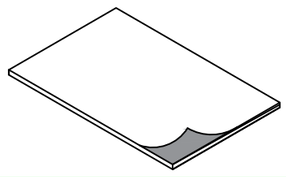	4pcs
G	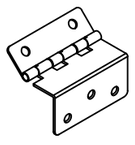 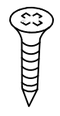	2pcs 8pcs						

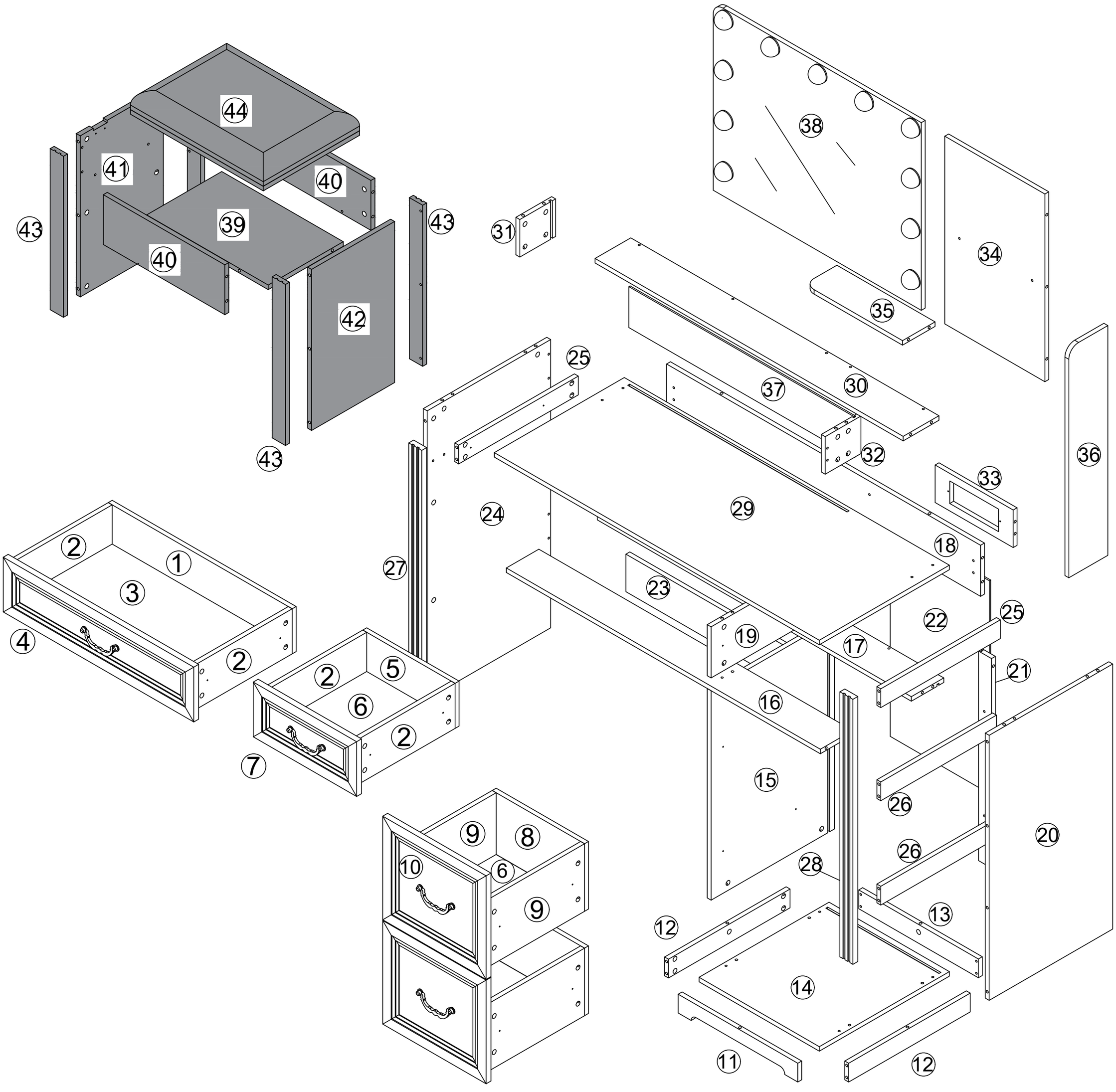

Step 91

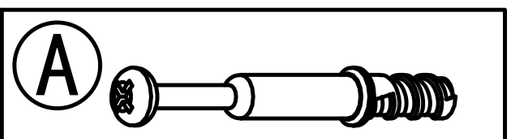

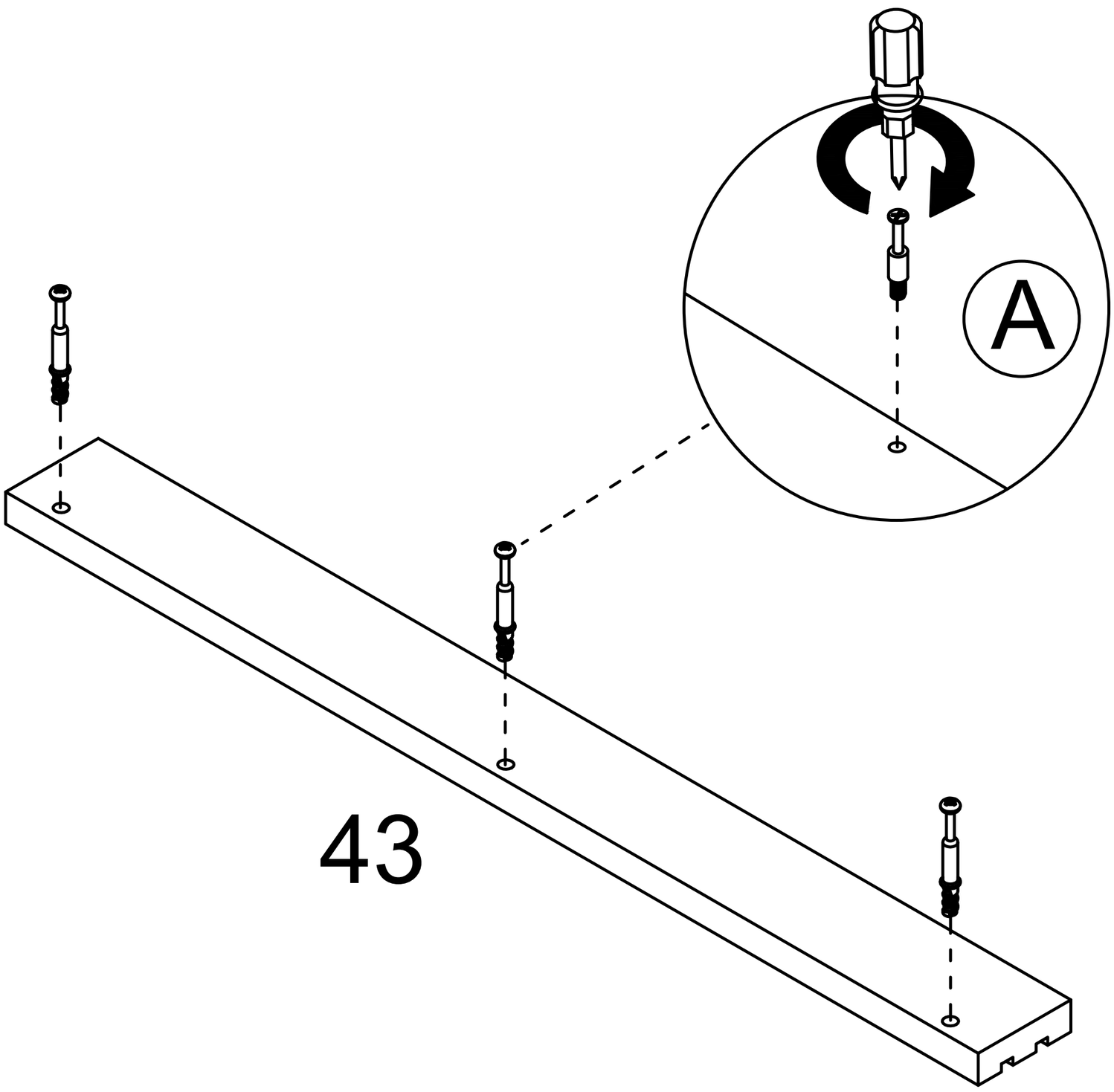

x4

Step 92

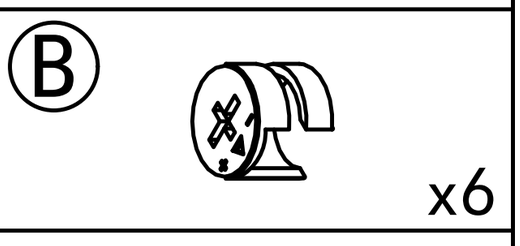

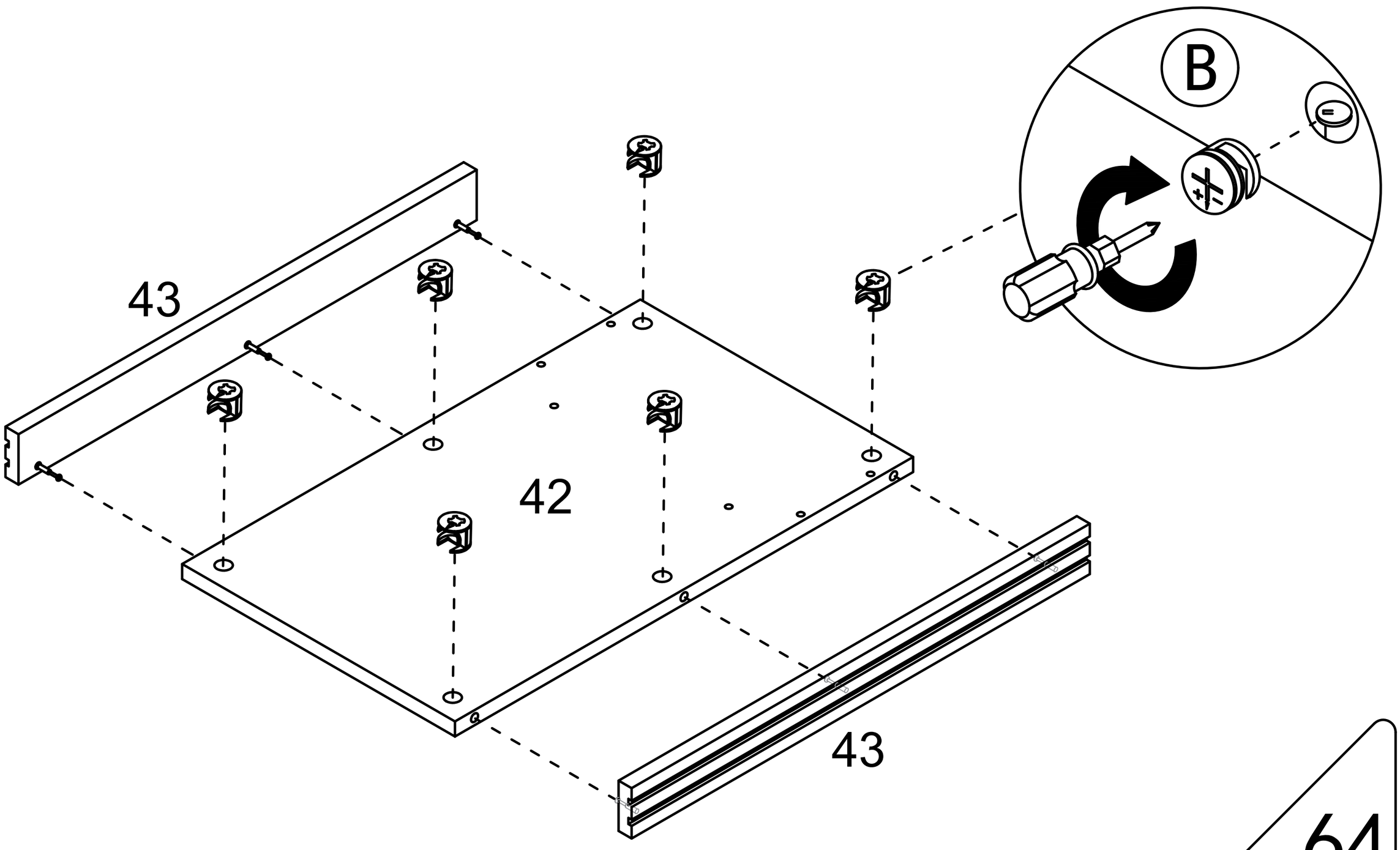

Step 93

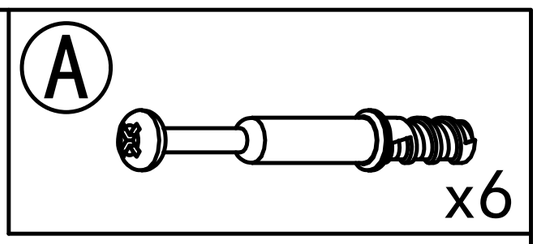

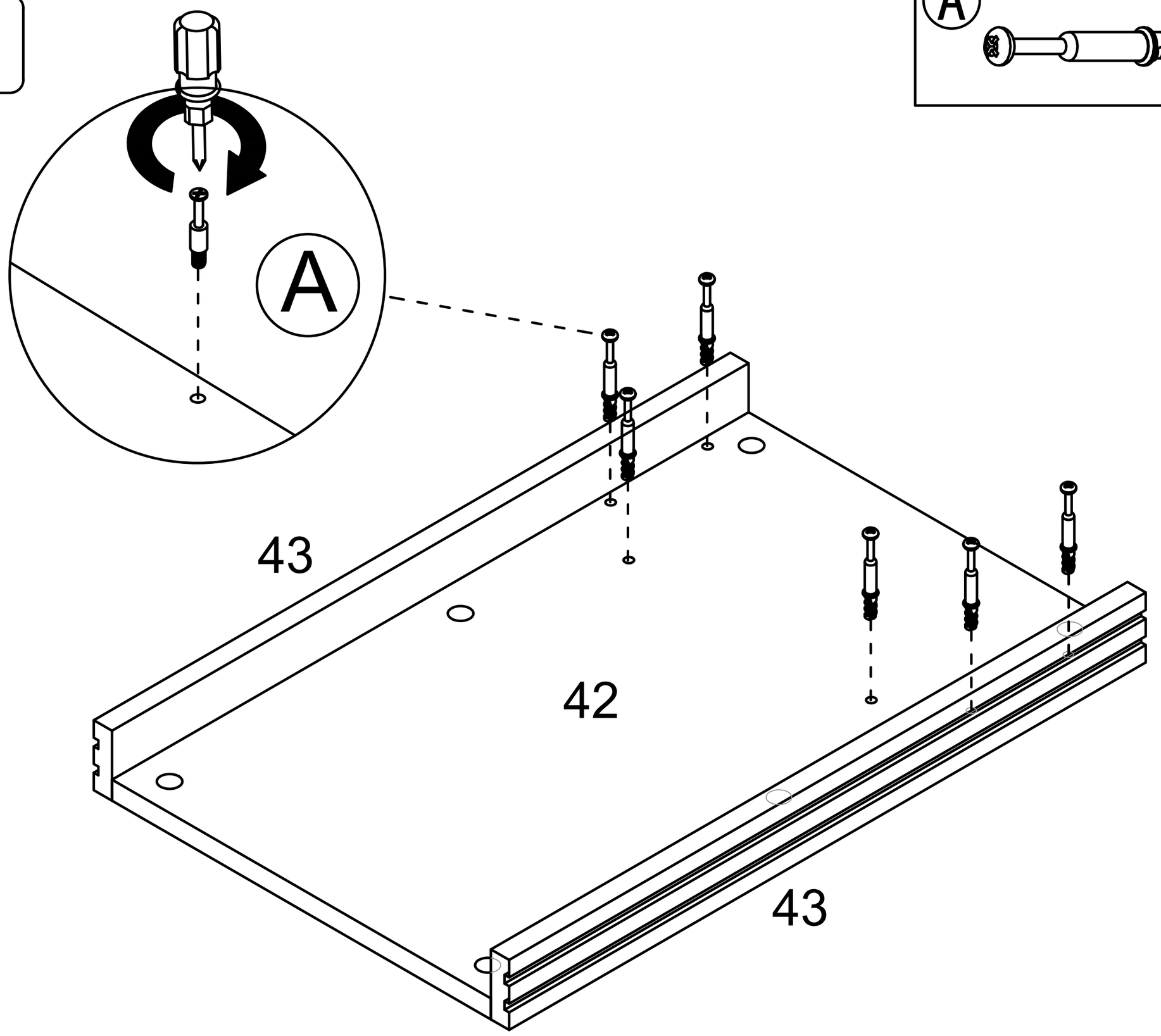

Step 94

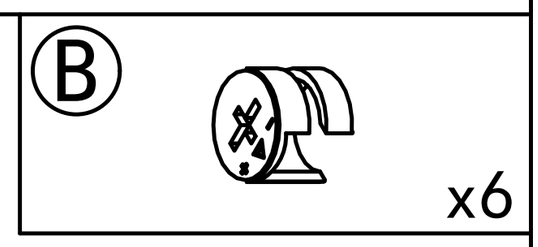

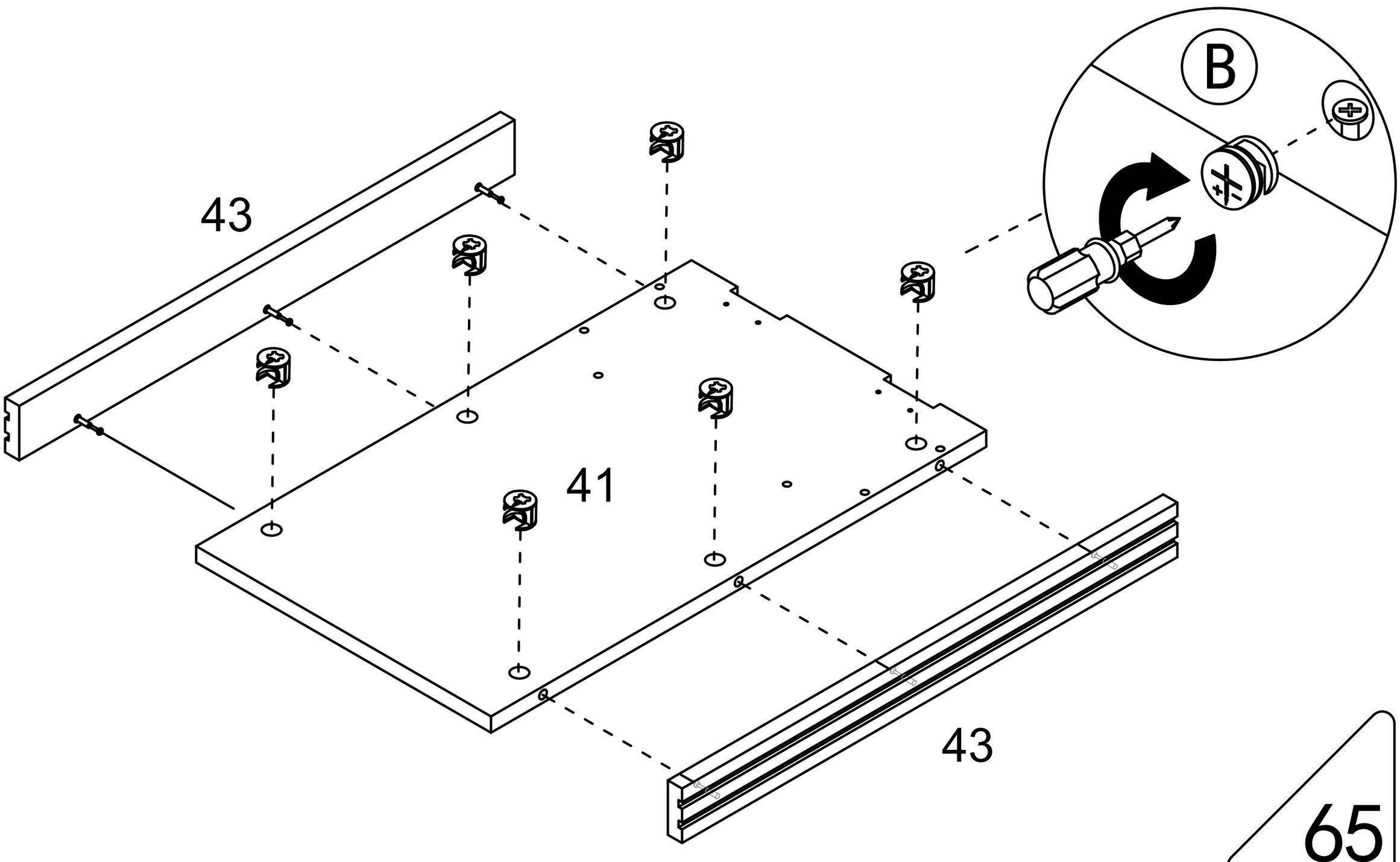

Step 95

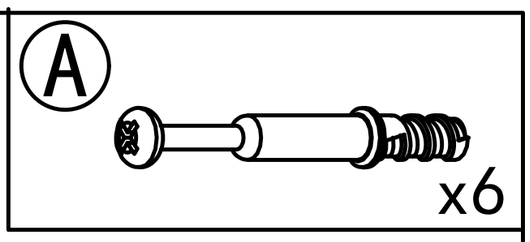

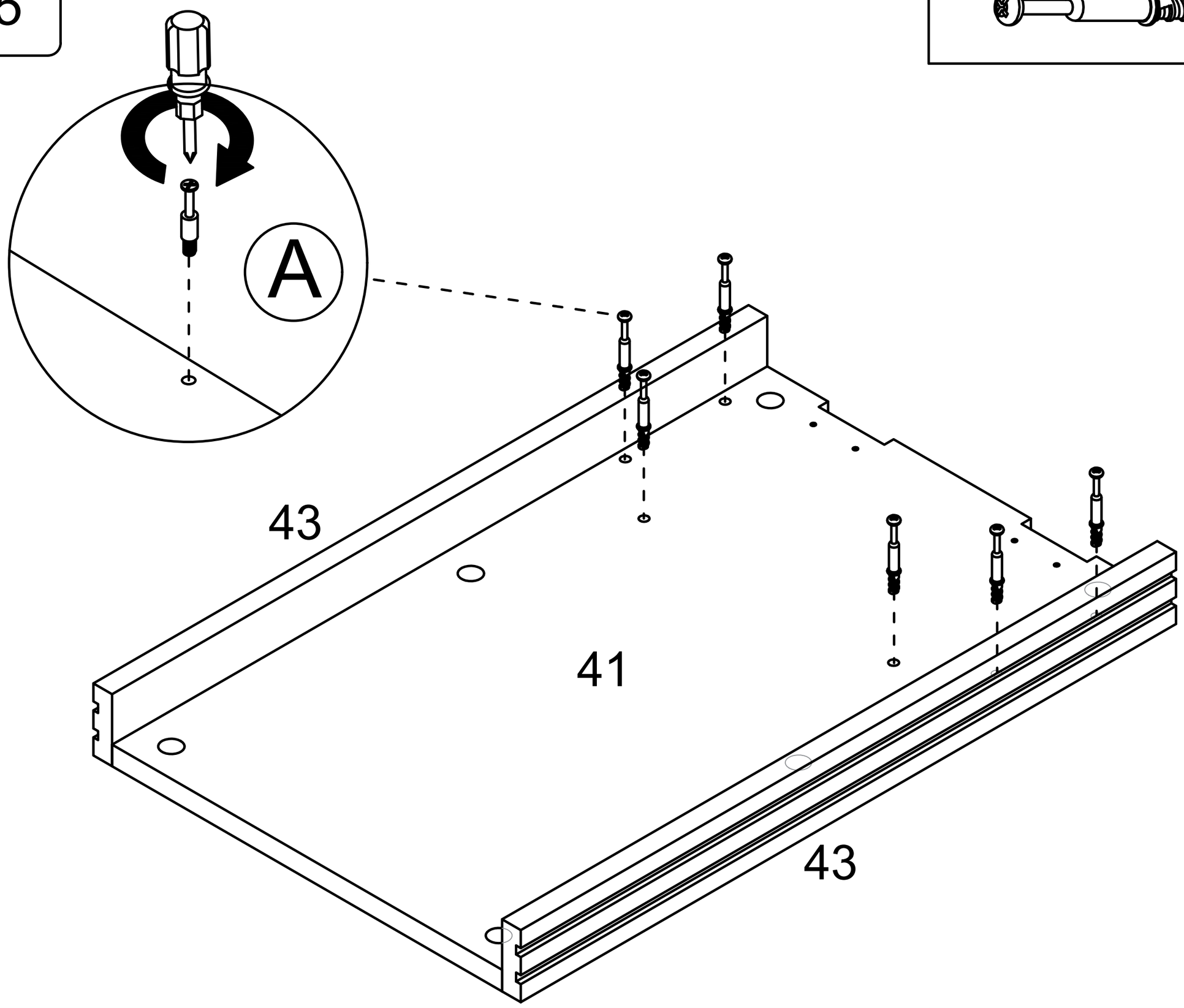

Step 96

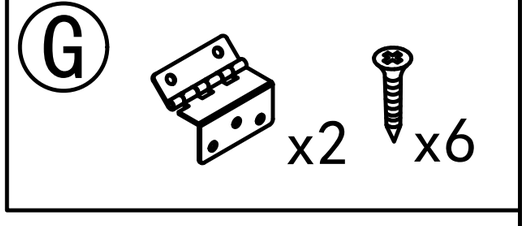

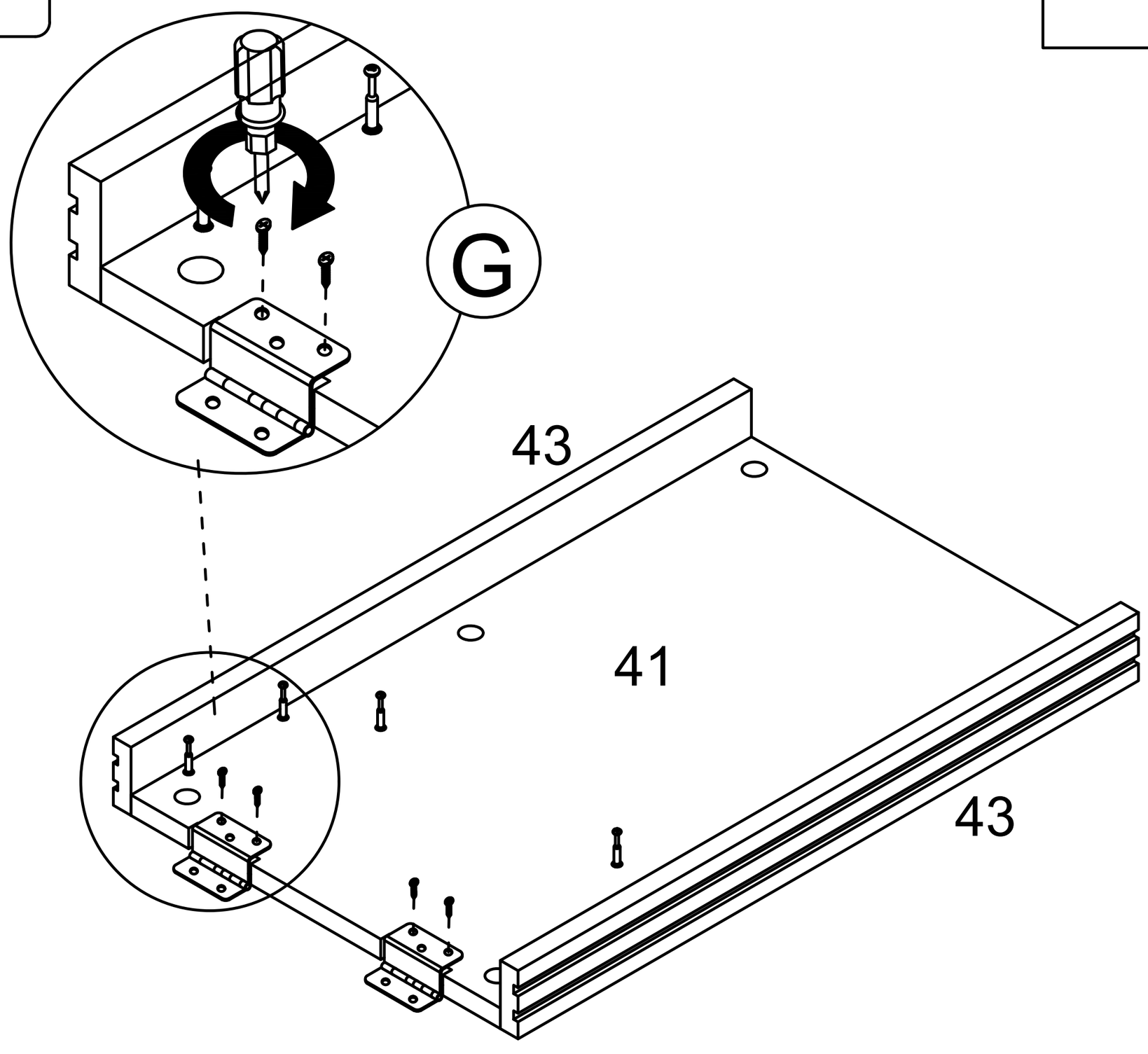

Step 97

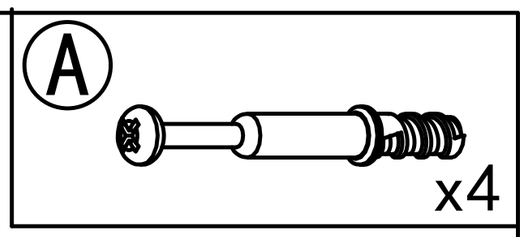

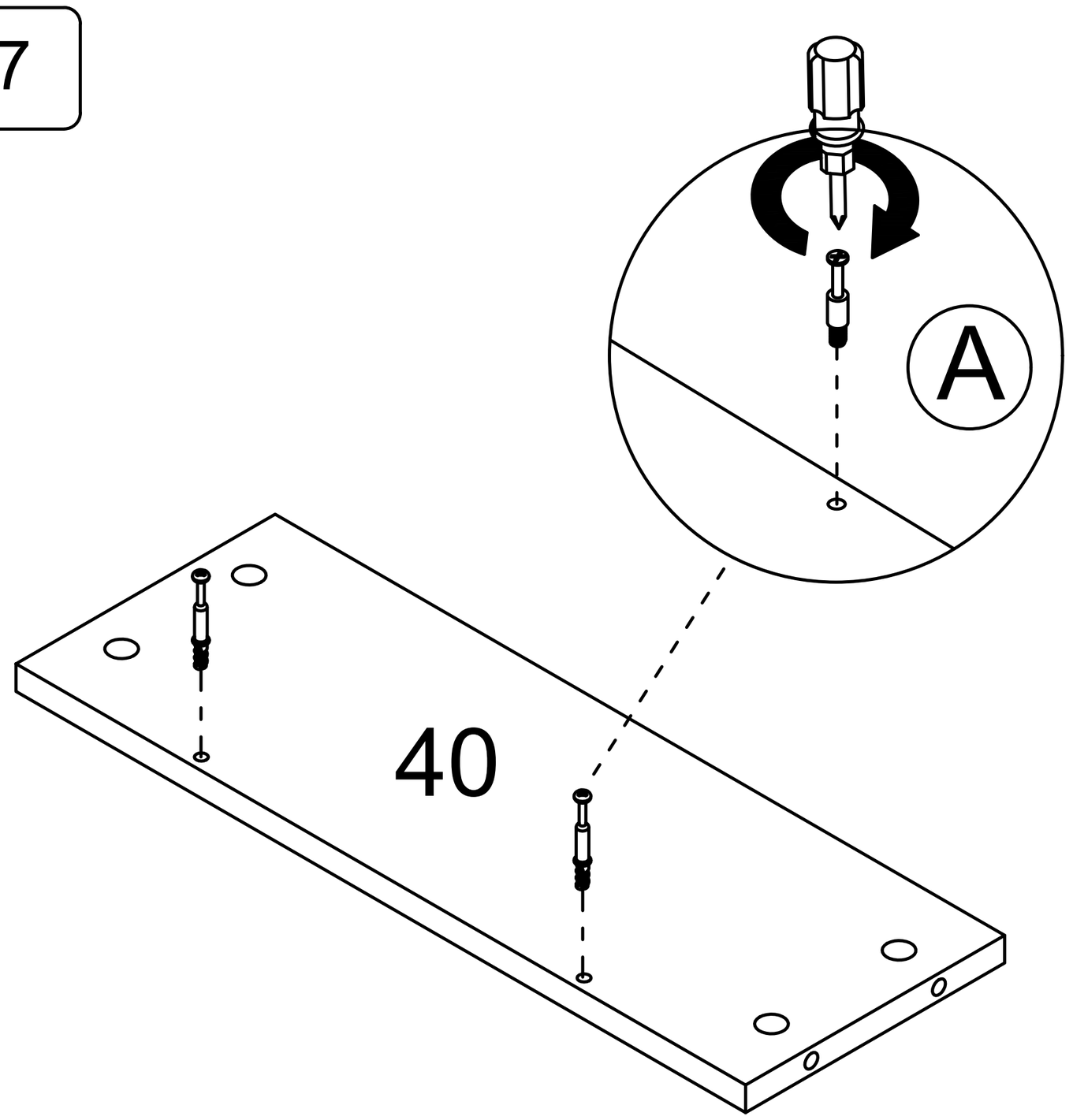

x2

Step 98

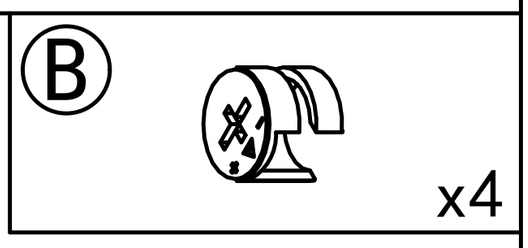

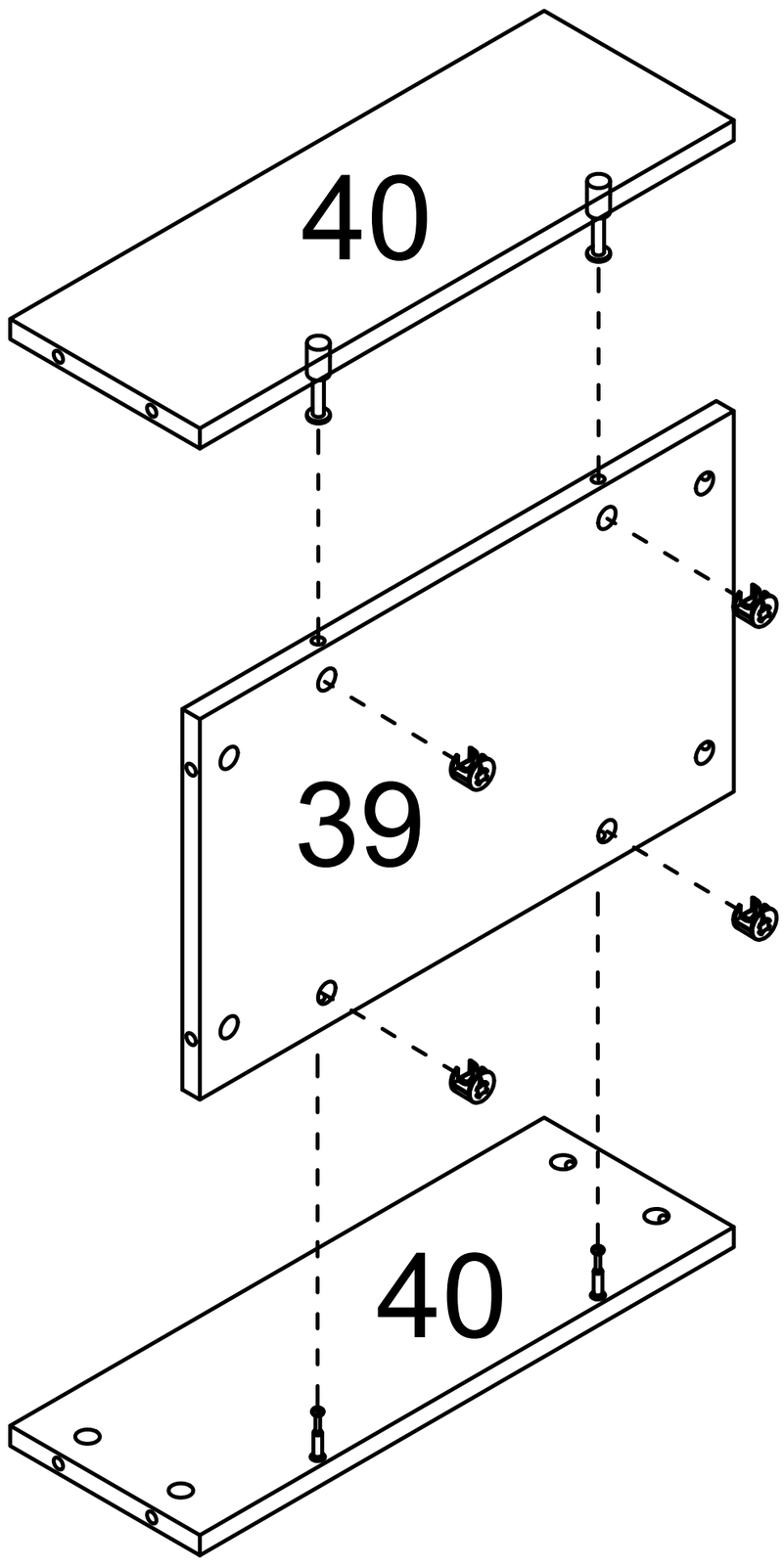

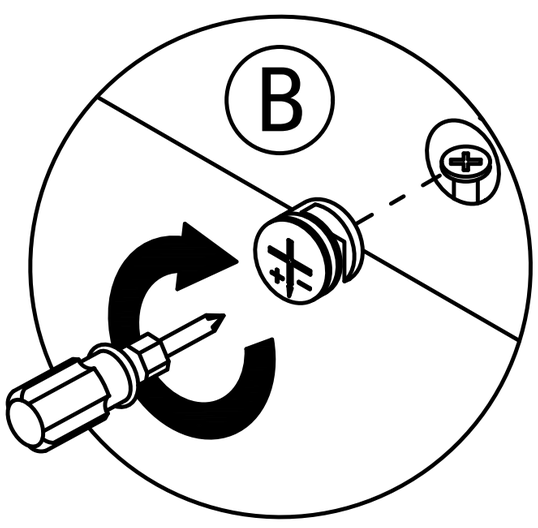

Step 99

B x6

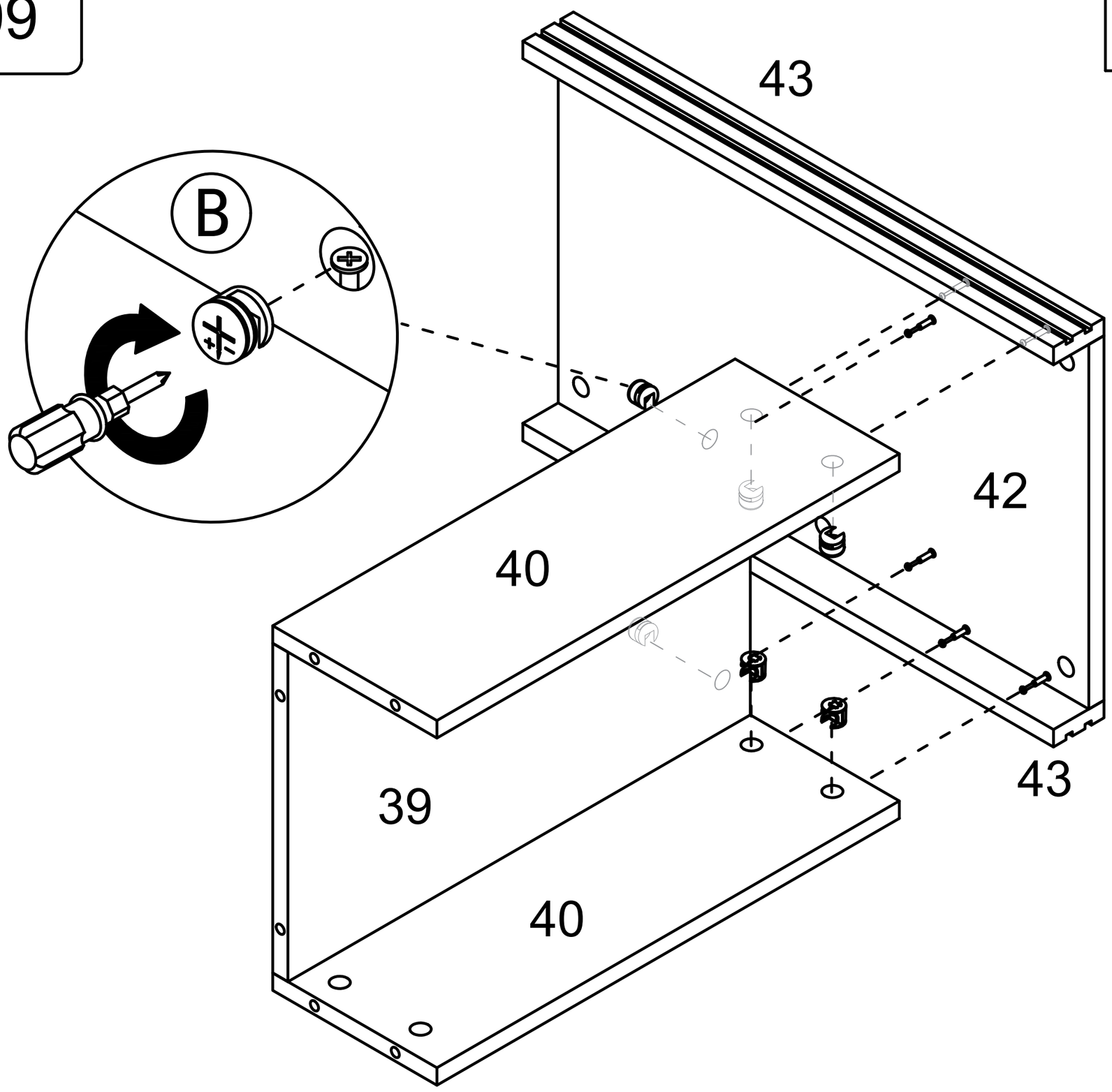

Step 100

B x6

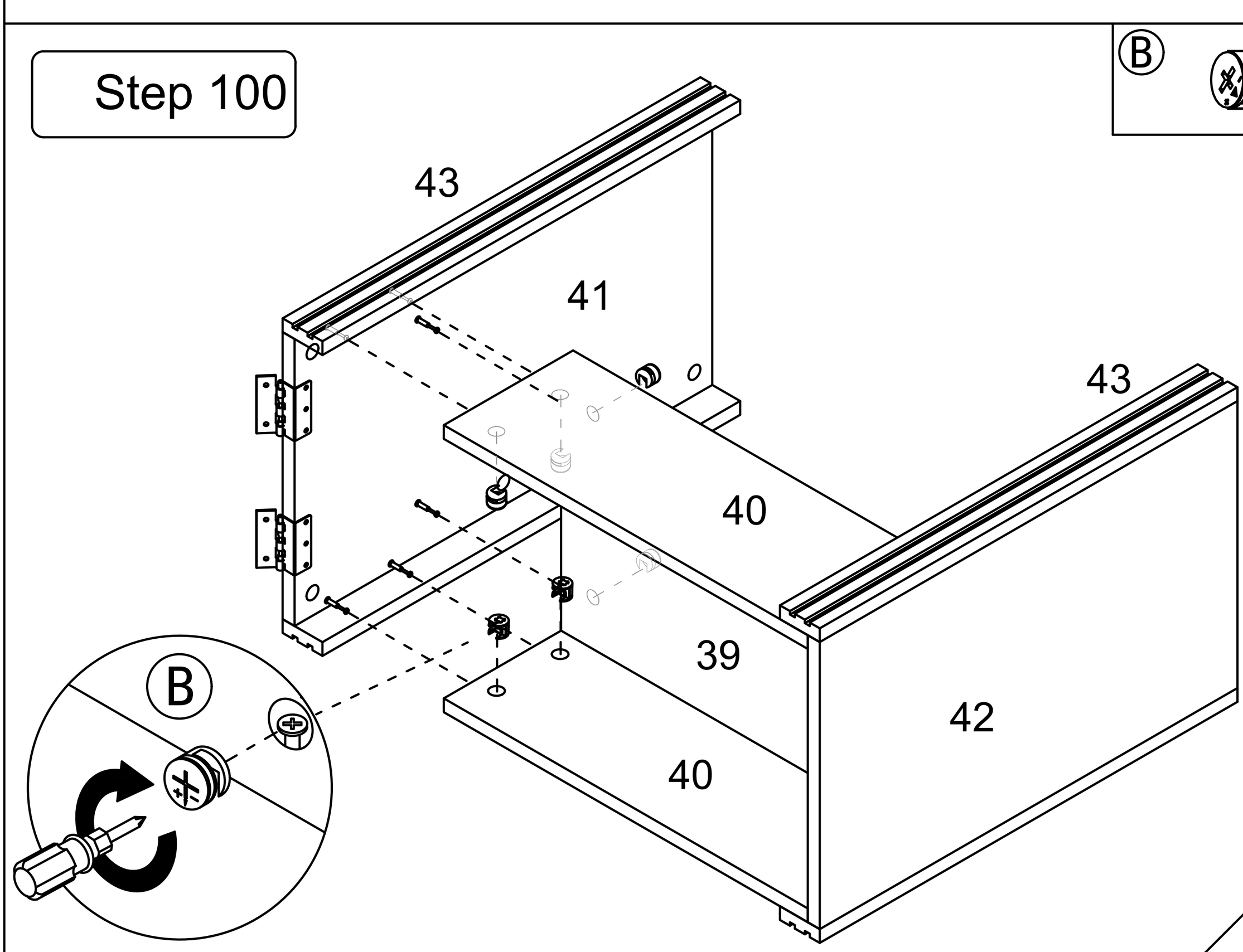

Step 101

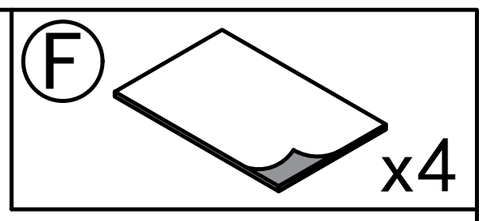

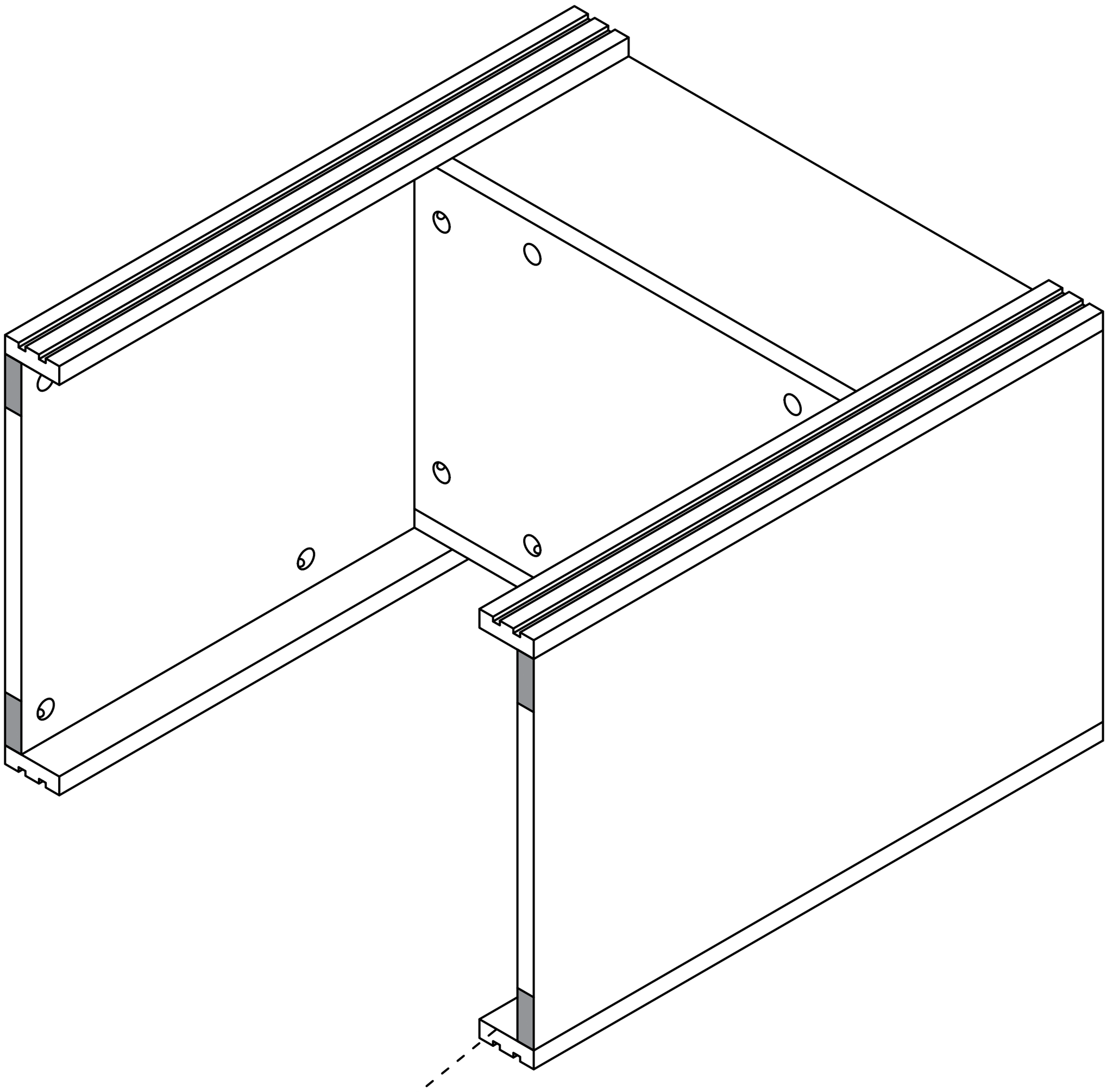

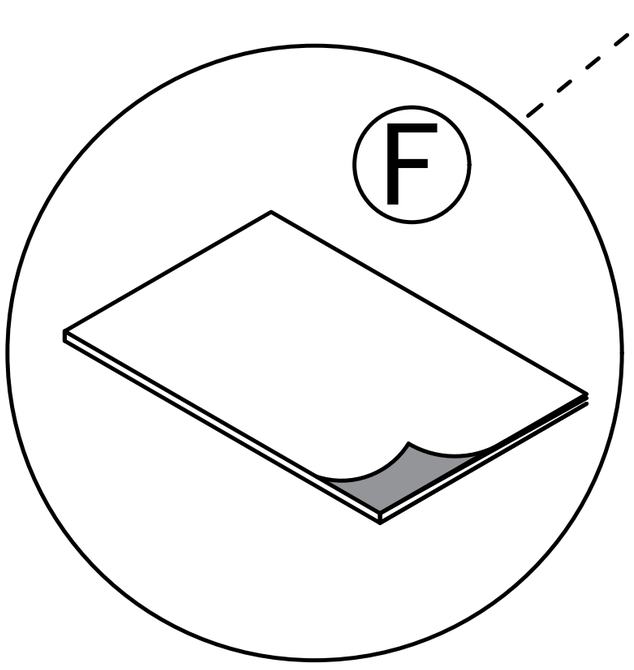

Tear off release paper and stick the black foot pad on the board

Step 102

G x4

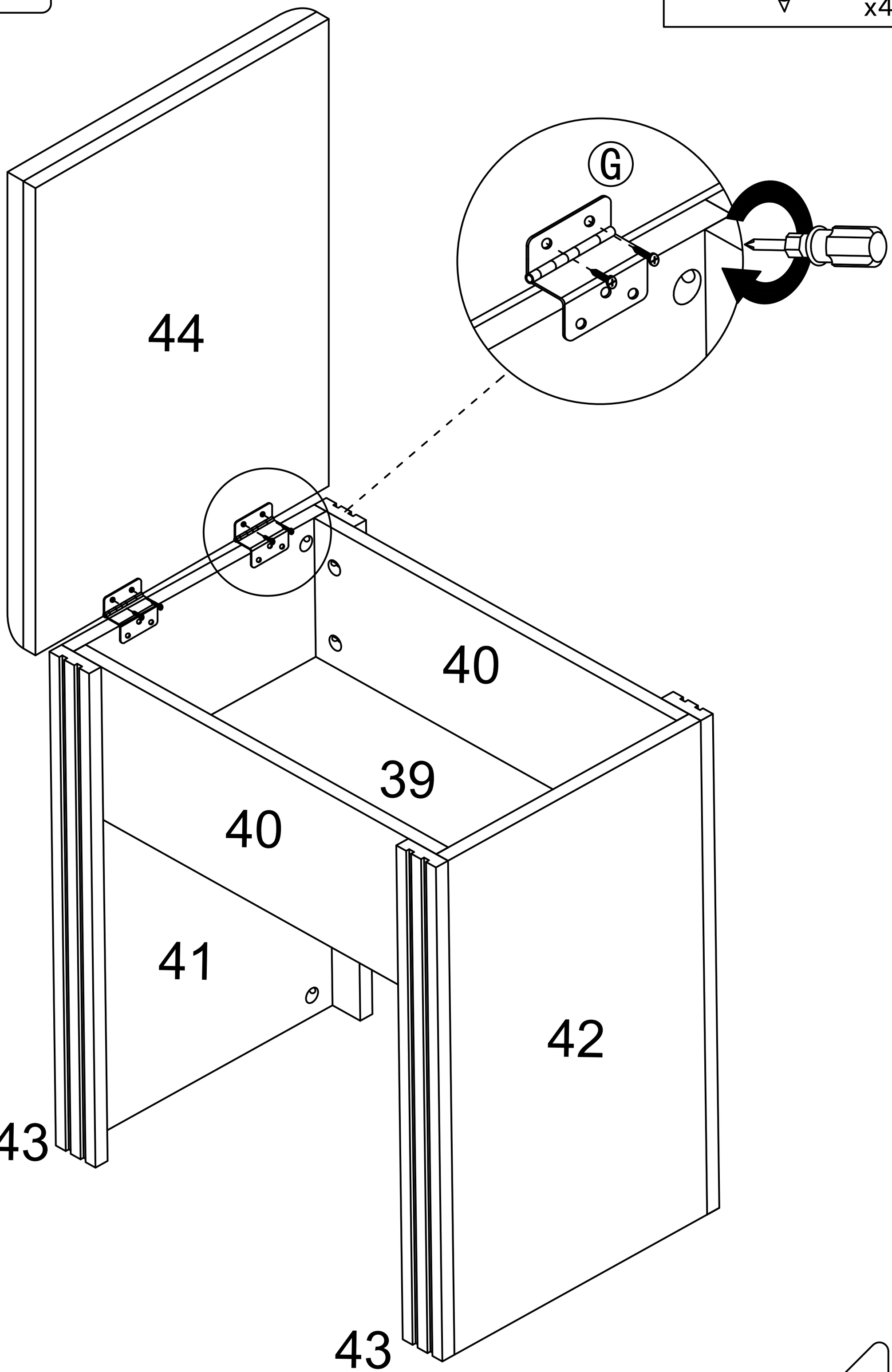

Step 103

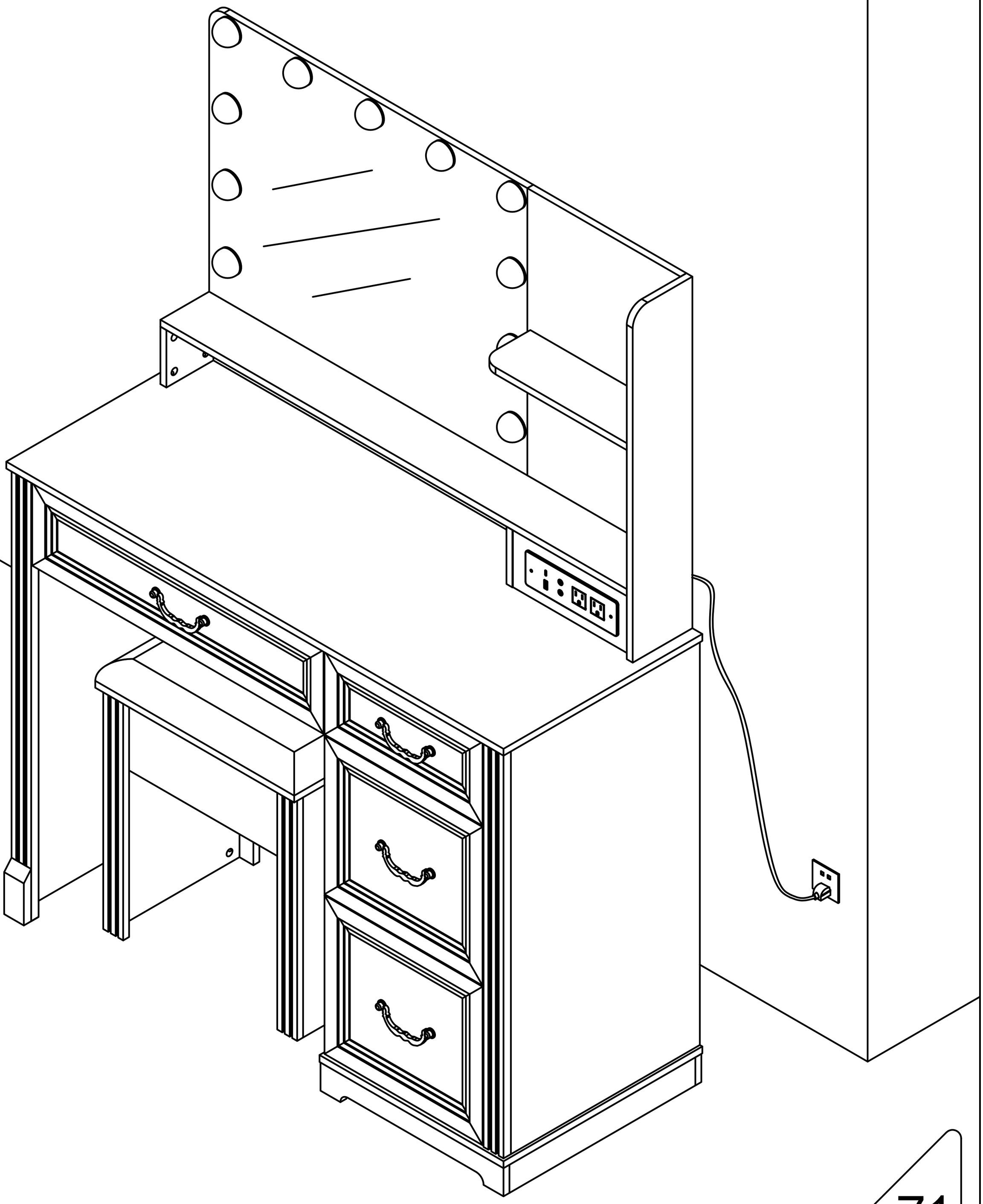

User's Guide

A21

Thank you for purchasing this product.
Please use if the product works normally after connecting to power.

Introduction

The box is an intelligent controller.

It has 1 USB-A output port 1 Type-c output port and 2 socket.

With 2 touch buttons, it can turn. ON/OFF the light,adjust the light luminance, and change light colors.

Operation

This touch button is used to turn on/off, and adjust brightness.

A. Short touch ->lighting on ->short touch ->lighting off(It stays as it was before the last time the lights went out).

B. Long touch -> adjust the luminance.

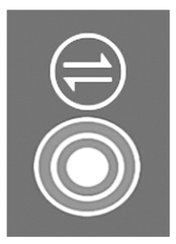

This touch button is used to change colors.

When the light is turned on, press this button to realize the three-color switching function , and this touch key is invalid when the light is not turned on.

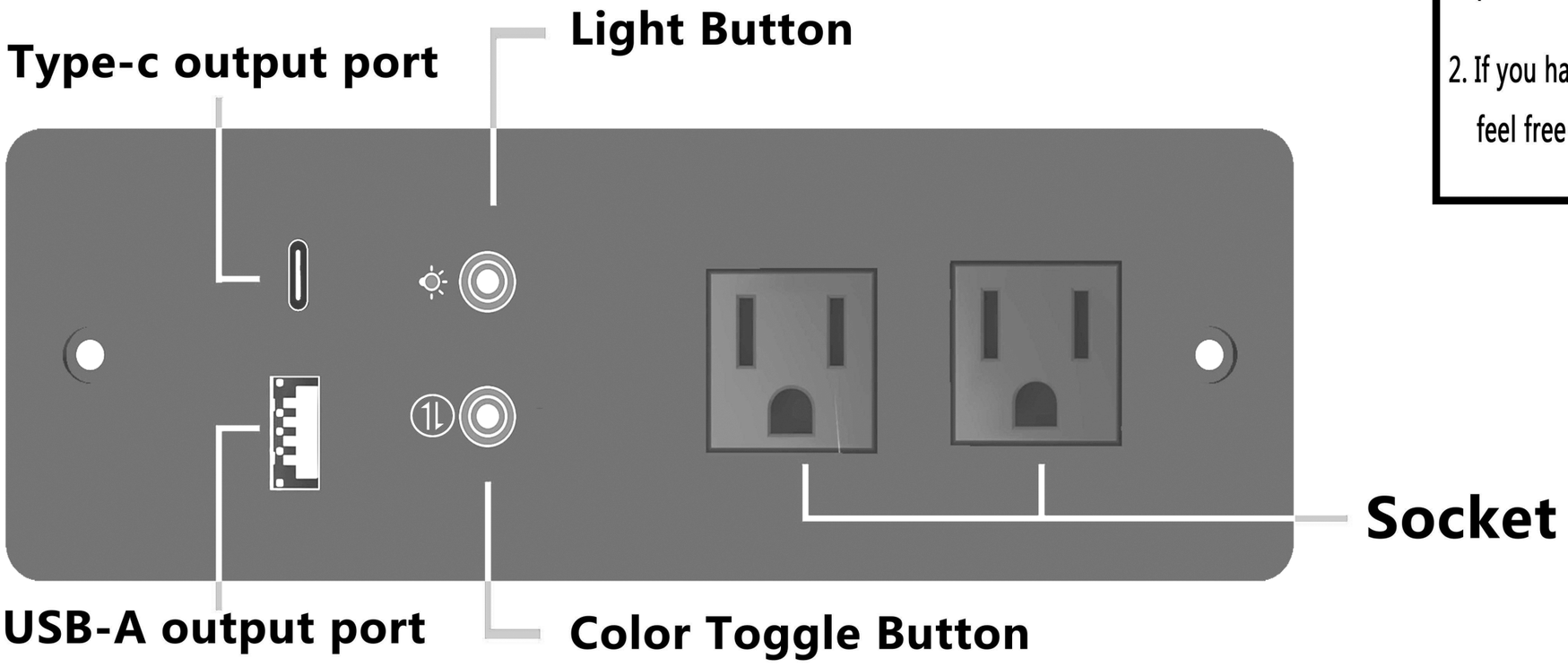

ATTENTION PLEASE

1. If there is no touch response suddenly, Re-plug the power to reset the touch static electricity.
2. If you have any questions when installing, please feel free to contact us. Thank you.