ASSEMBLY INSTRUCTIONS

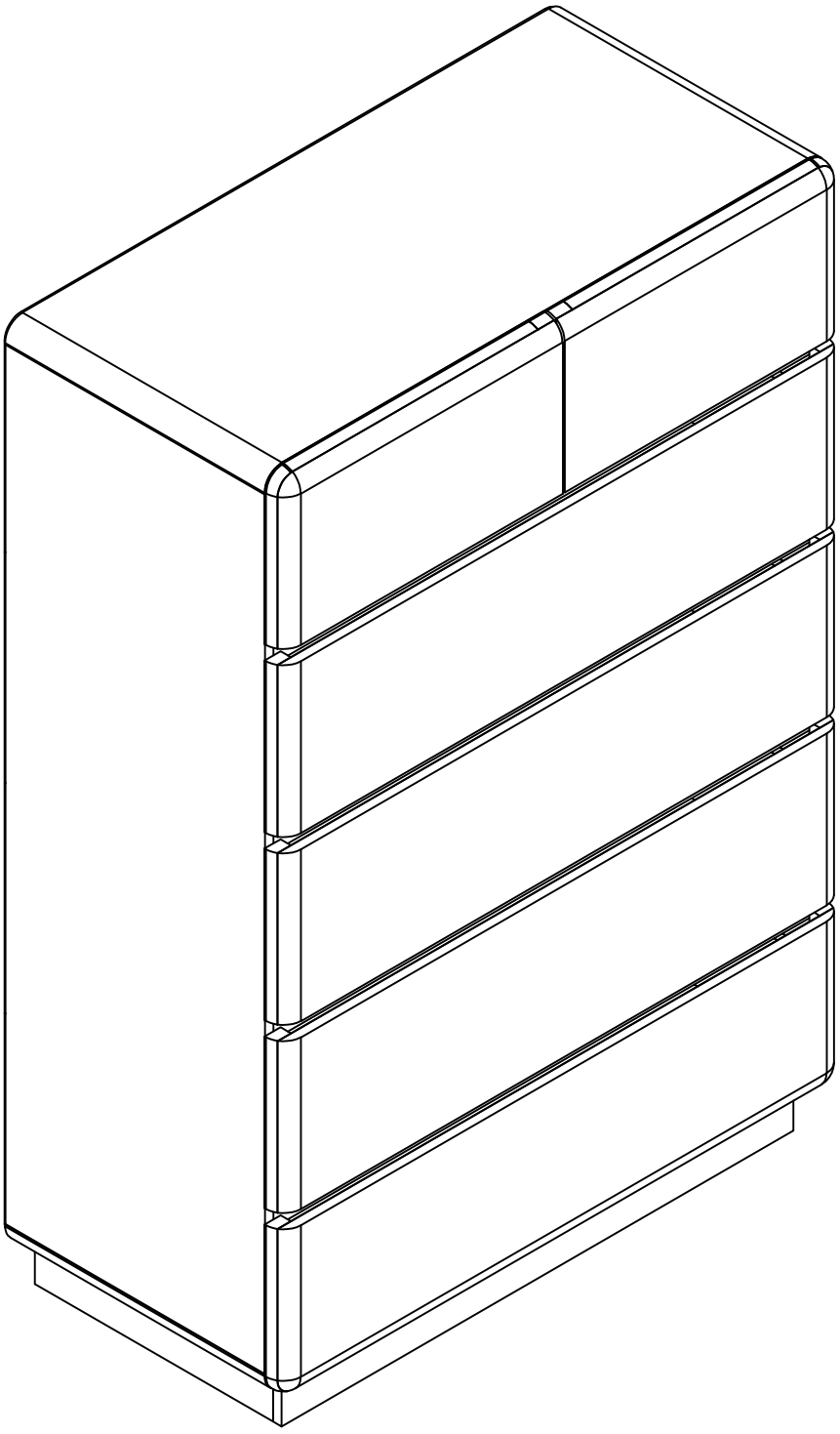

For product support or inguiries, please reach out to us at harpaqservice@gmail.com

PACKAGE INCLUDE

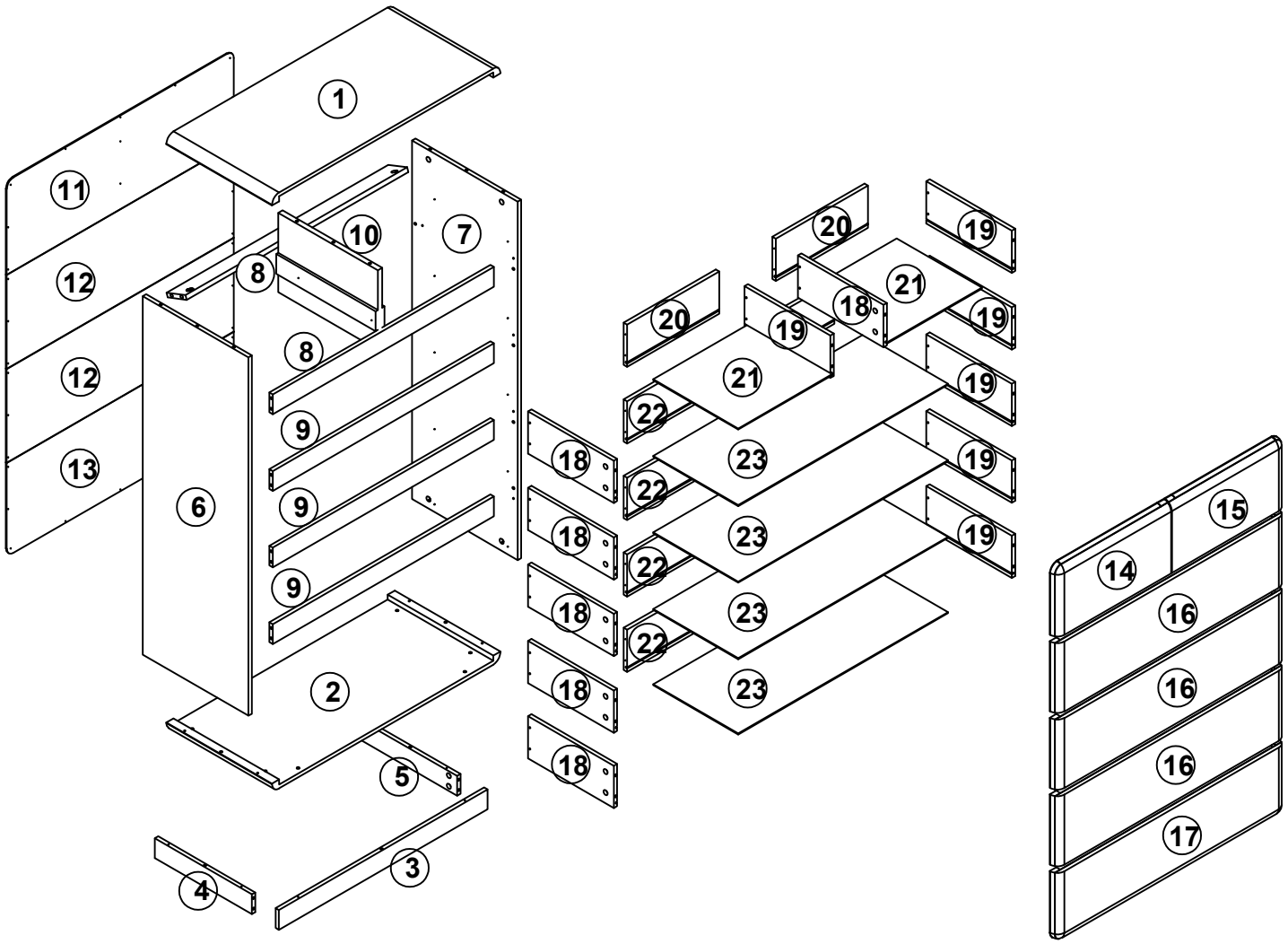

For product support or inguiries, please reach out to us at harpaqservice@gmail.com

PACKAGE INCLUDE

CODE	DESCRIPTION	QTY
1	Top Panel	1
2	Base Panel	1
3	Fore foot Plate	1
4	Left foot Plate	1
5	Right foot Plate	1
6	Left Side Panel	1
7	Right Side Panel	1
8	Front connecting rod 1	2
9	Front connecting rod 2	3
10	Middle partition	1
11	Upper Backplate	1
12	Middle Backplate	2
13	Lower Backplate	1
14	Left Upper Padded Panels	1
15	Right Upper Padded Panels	1
16	Middle Padded Panels	3
17	Lower Padded Panels	1
18	Drawer Left Side Panel	6
19	Drawer Right Side Panel	6
20	Short Drawer Back Panel	2
21	Short Drawer Bottom Panel	2
22	Long Drawer Back Panel	4
23	Long Drawer Bottom Panel	4

For product support or inguiries, please reach out to us at harpaqservice@gmail.com

PACKAGE CONTENT

Ø8X30MM 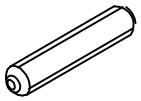 A 20+2	Ø6X40MM 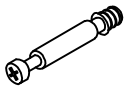 B 50X+3	Ø15X10MM 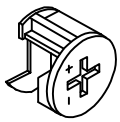 C 50X+3	Ø4X30MM 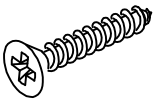 D 30X+2
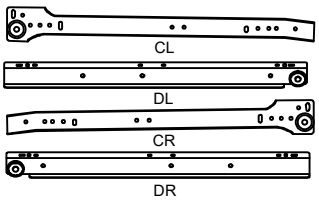 E 6X	Ø3.5X12MM 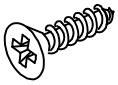 F 48X+3	Ø3X12MM  G 32X+2	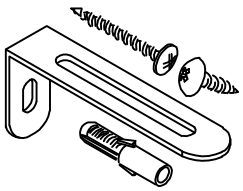 H 2X

For product support or inguiries, please reach out to us at harpaqservice@gmail.com

How to use the cam lock system

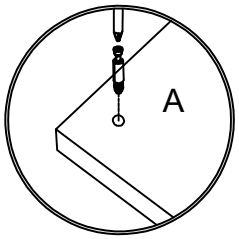

1.Screw cam boit into panel

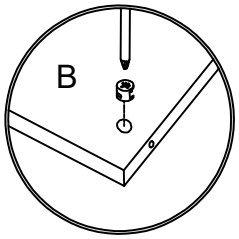

2.Push cam into panel - arrow feature on cam top points to panel edge

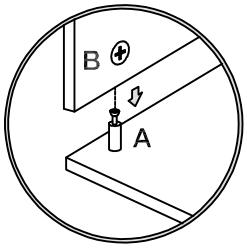

3.Aligu cam bolt(s) with cam(s) and insert all the way into cross-bored hole(s)

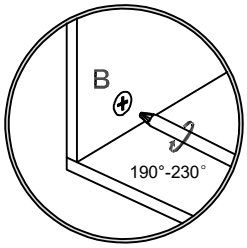

4.Rotate cam(s) clockwise 190°-230° to lock panels together

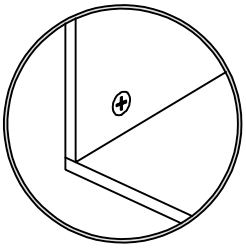

5.Panels should be tight against each other and connection should be rigid

Insert the wood dowel [C] at least half way by tapping lightly with a rubber mallet, IF NECESSARY.

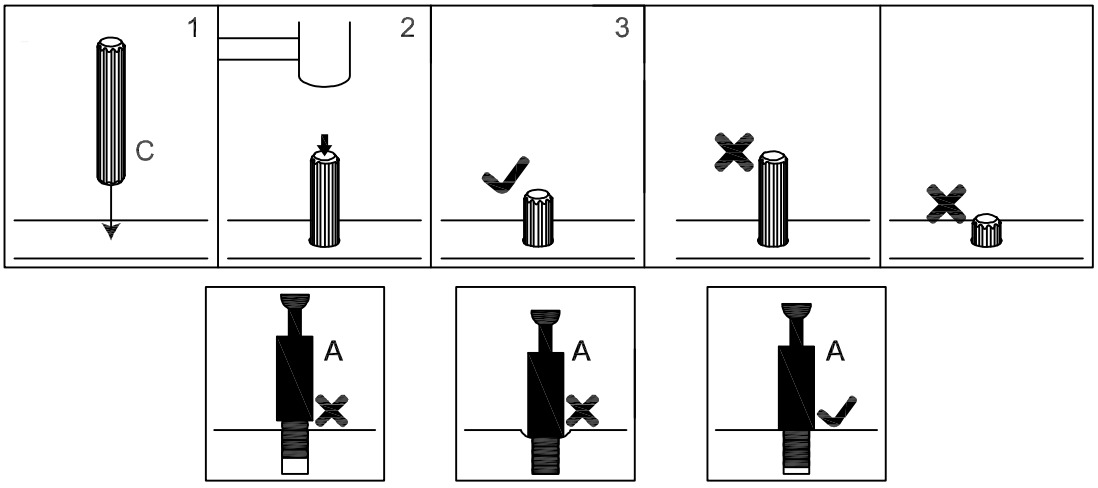

For product support or inguiries, please reach out to us at harpaqservice@gmail.com

STEP 1

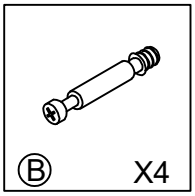

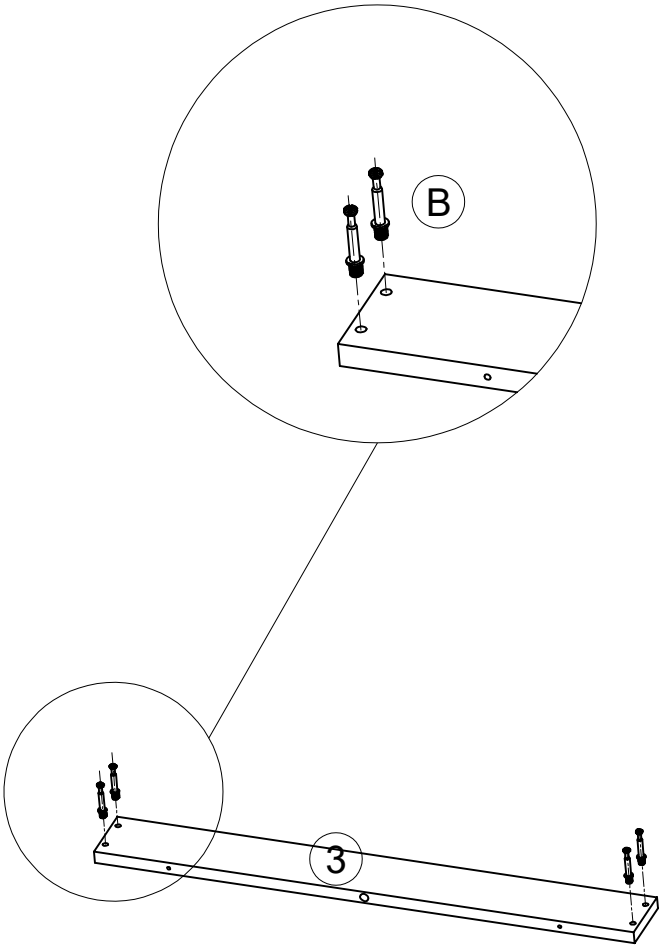

STEP 2

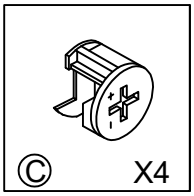

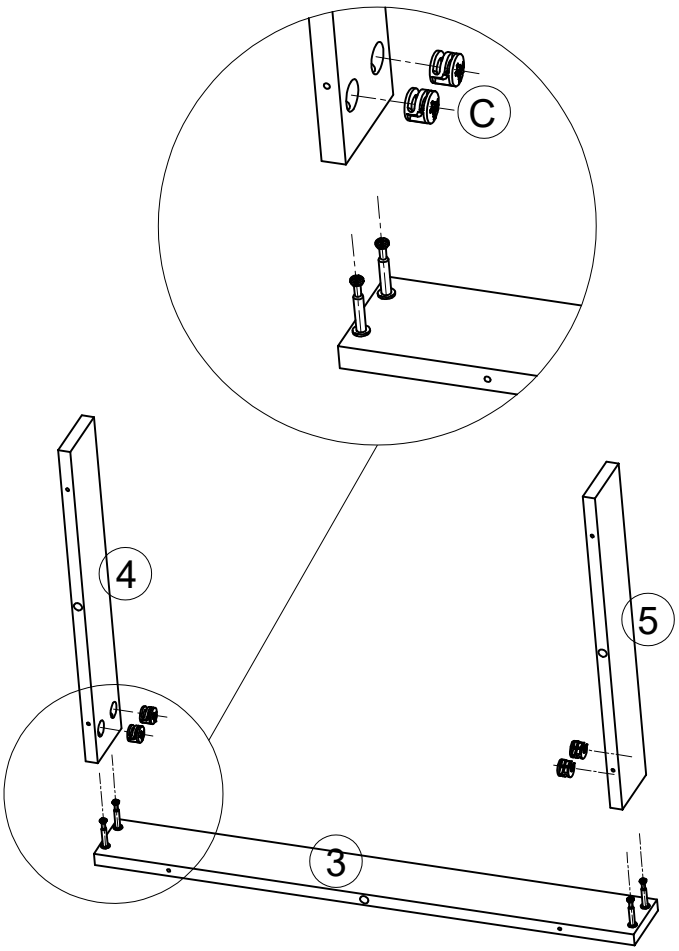

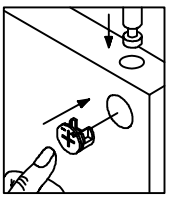

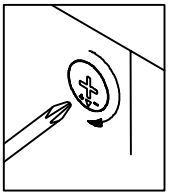

For product support or inguiries, please reach out to us at harpaqservice@gmail.com

STEP 3

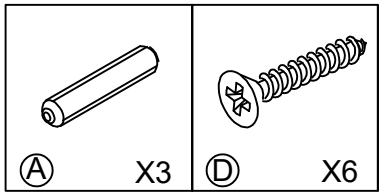

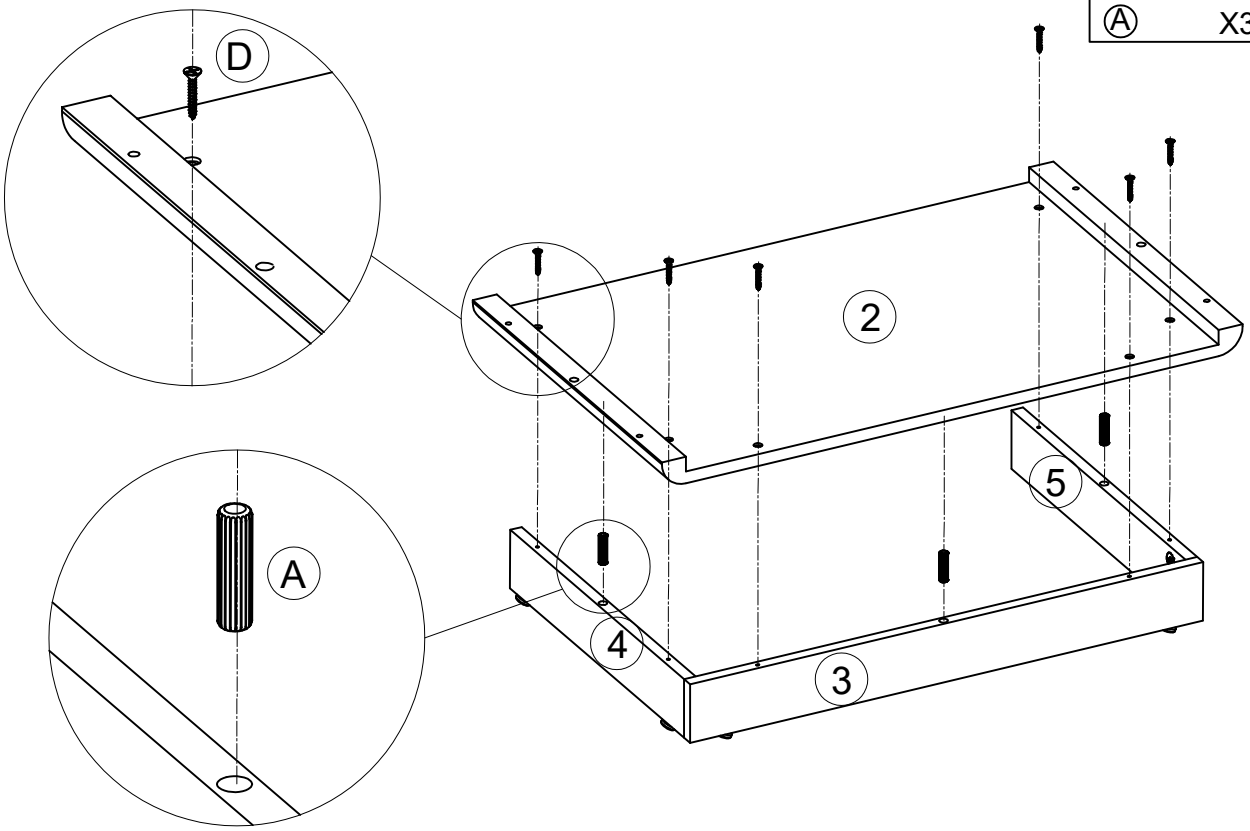

STEP 4

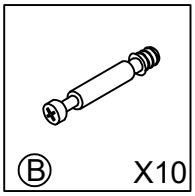

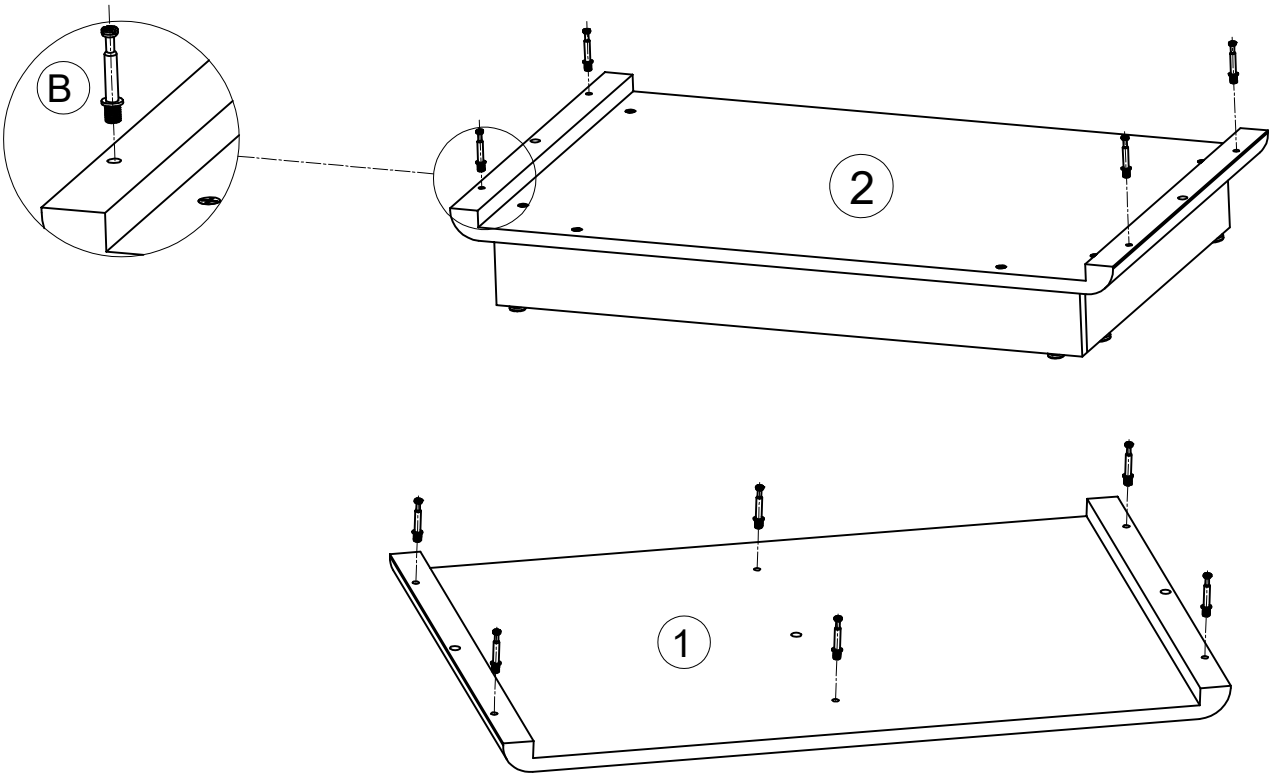

For product support or inguiries, please reach out to us at harpaqservice@gmail.com

STEP 5

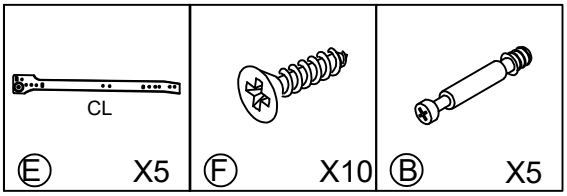

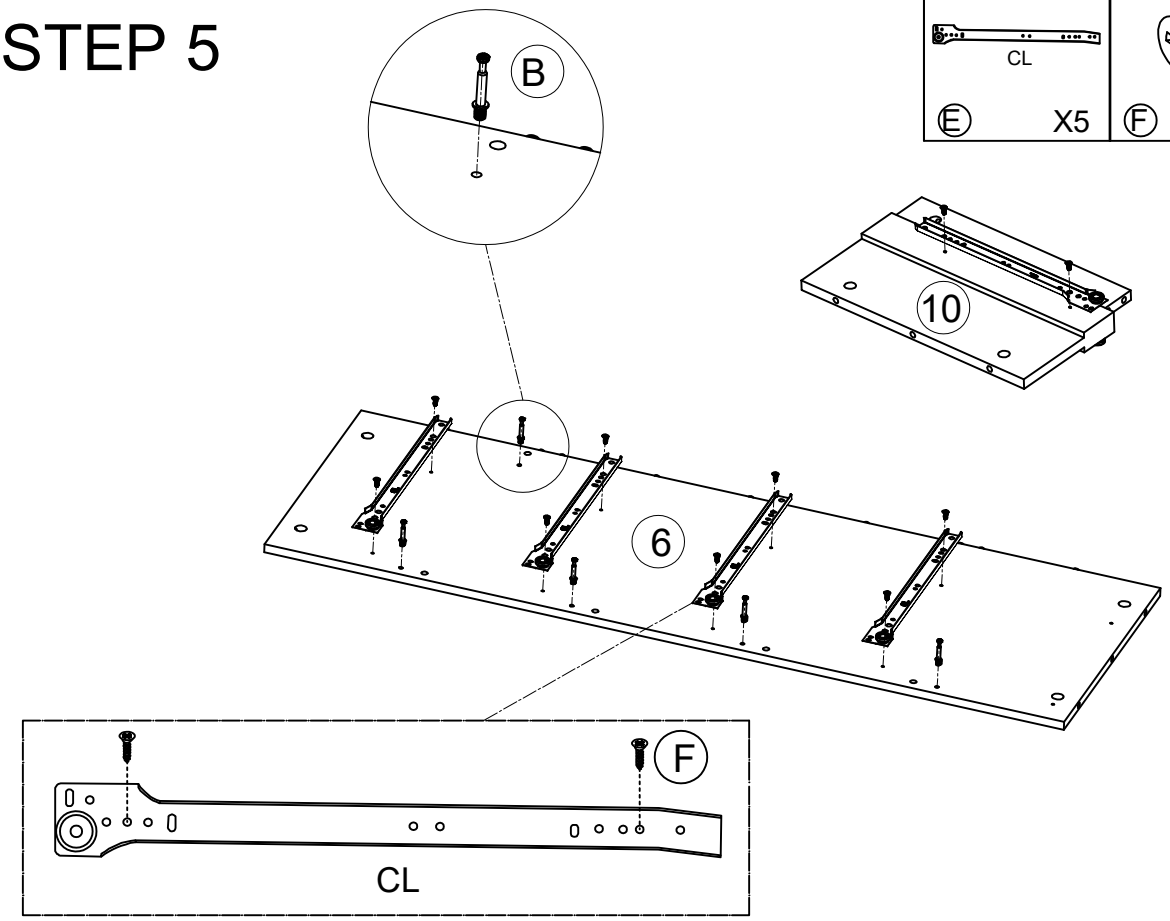

STEP 6

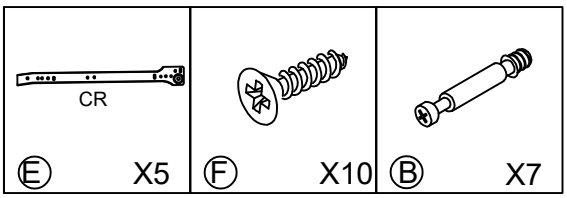

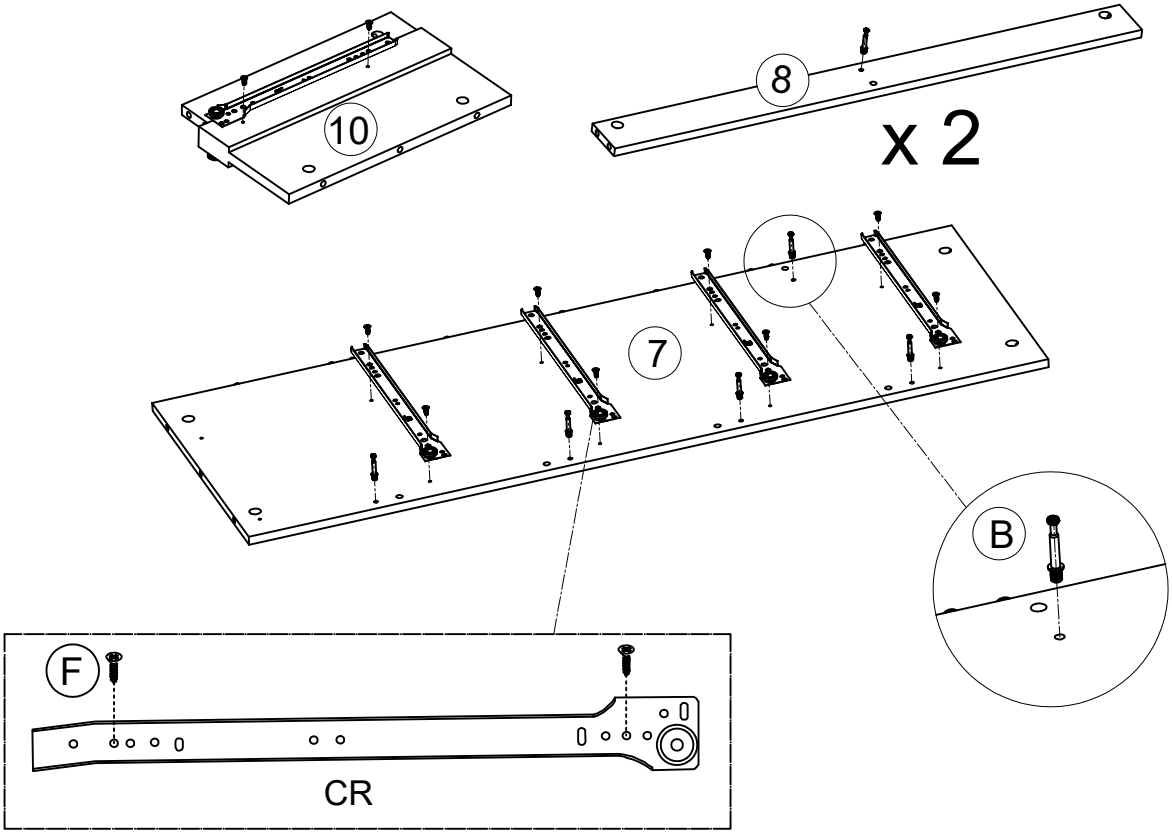

For product support or inguiries, please reach out to us at harpaqservice@gmail.com

STEP 7

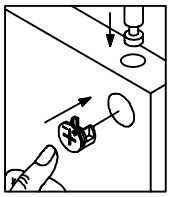

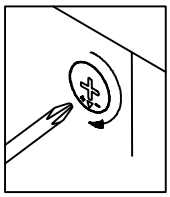

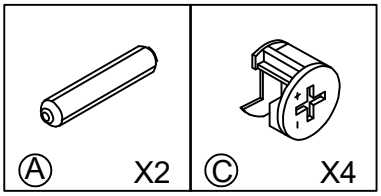

STEP 8

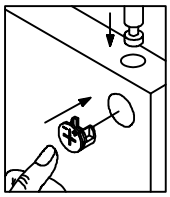

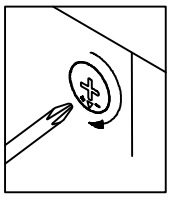

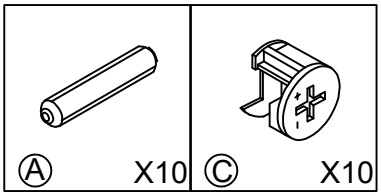

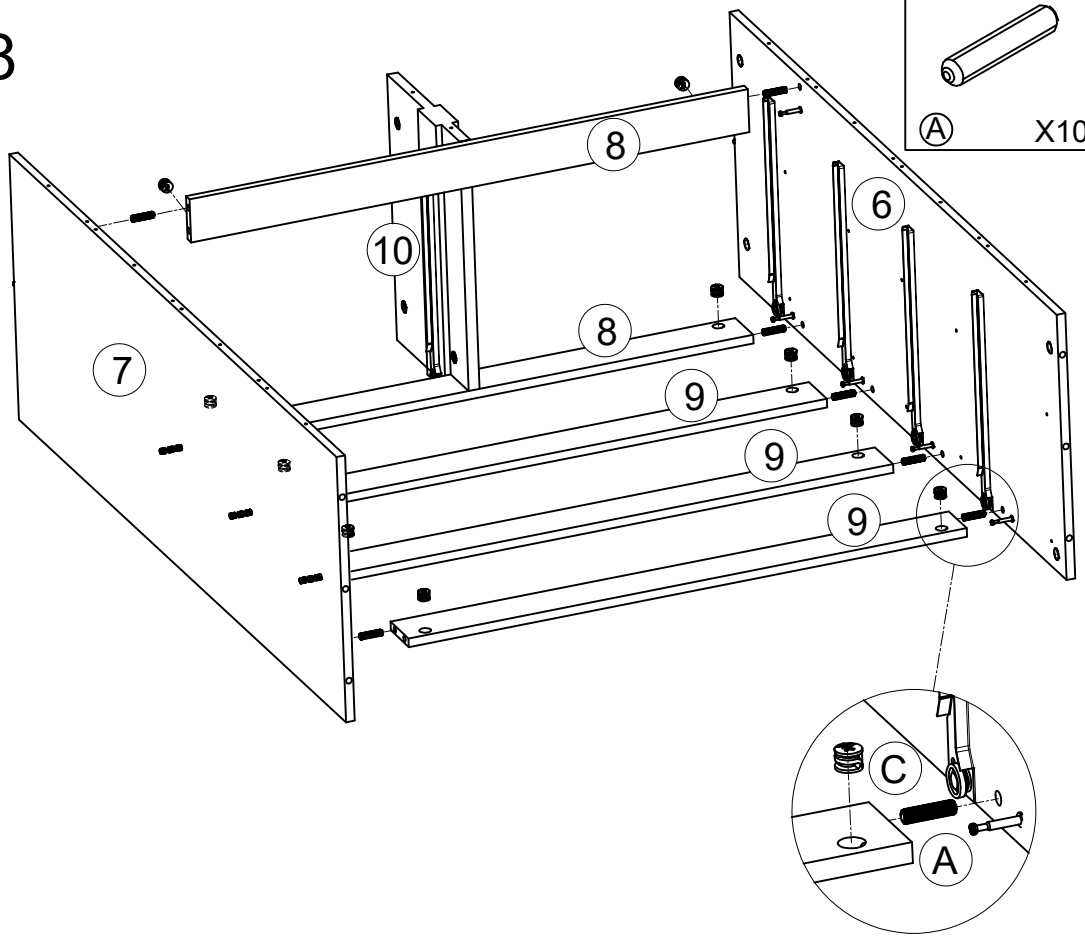

For product support or inguiries, please reach out to us at harpaqservice@gmail.com

STEP 9

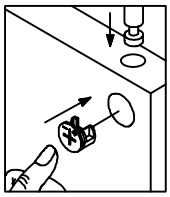

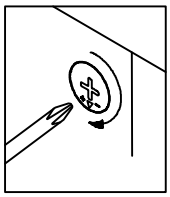

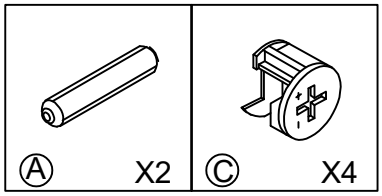

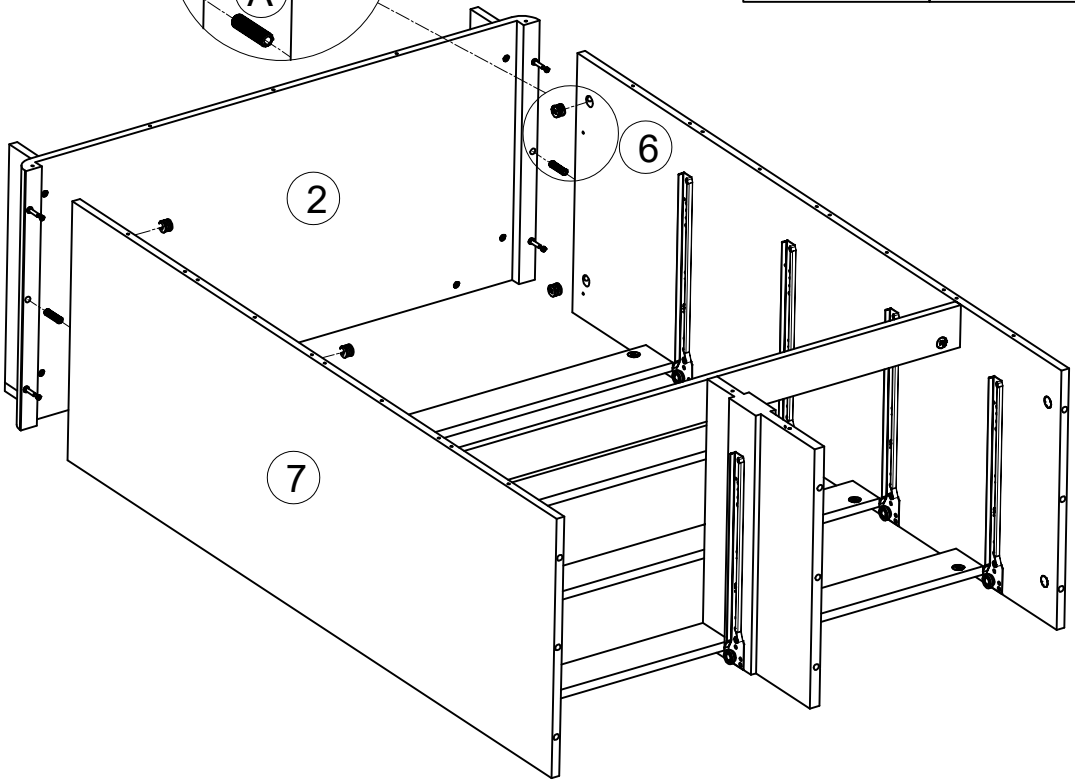

STEP 10

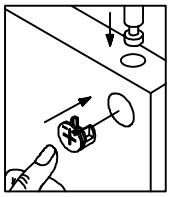

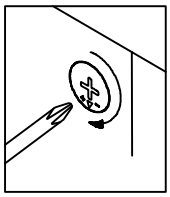

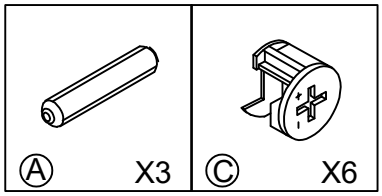

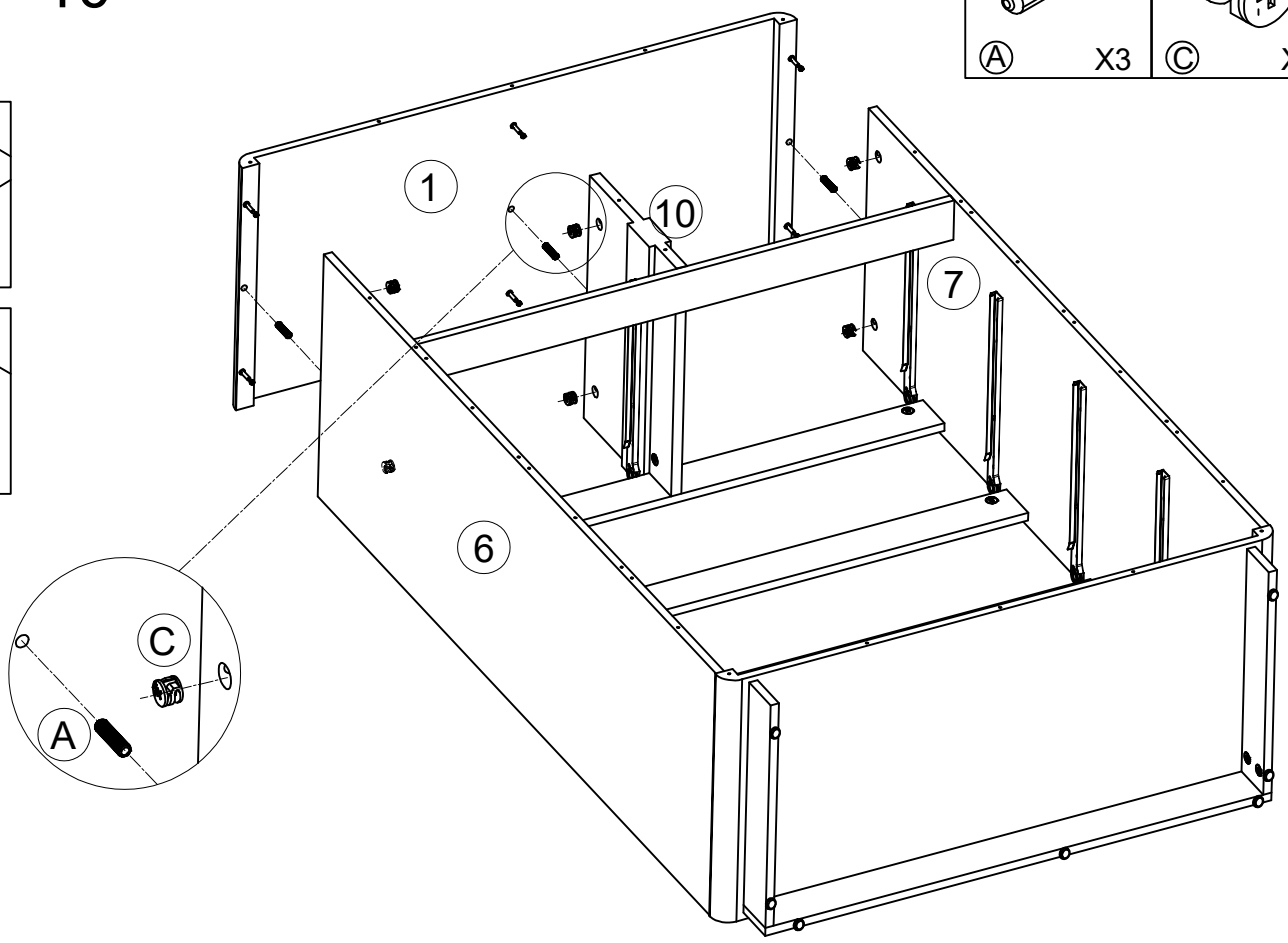

For product support or inguiries, please reach out to us at harpaqservice@gmail.com

STEP 11

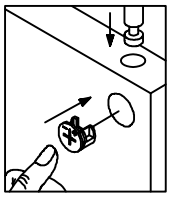

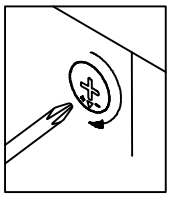

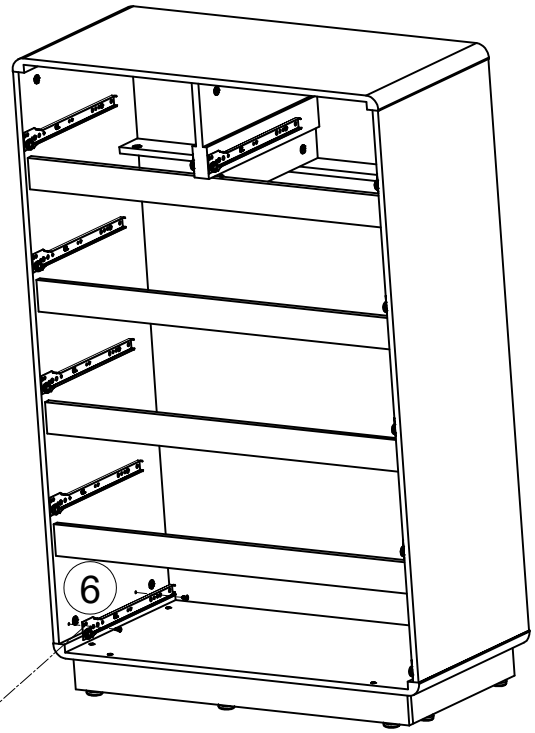

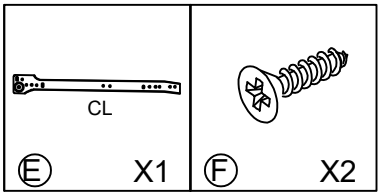

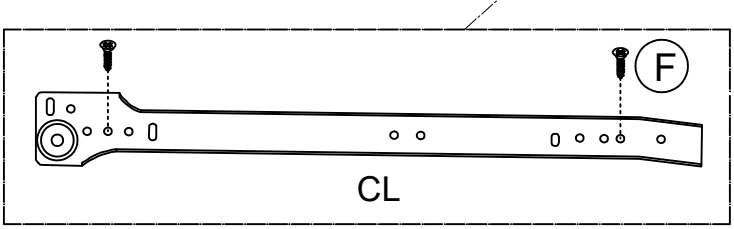

STEP 12

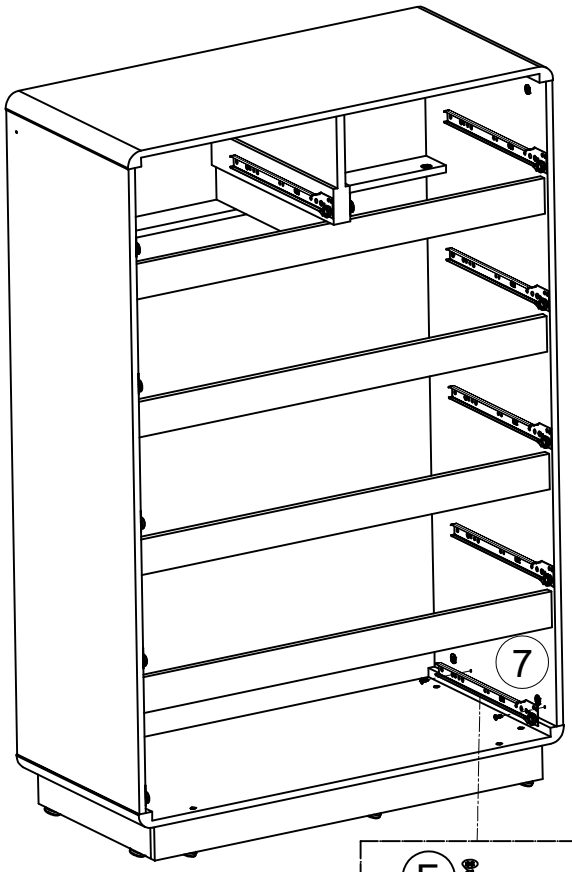

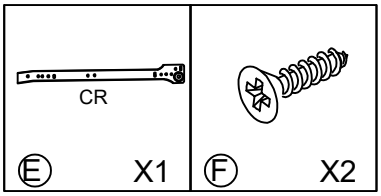

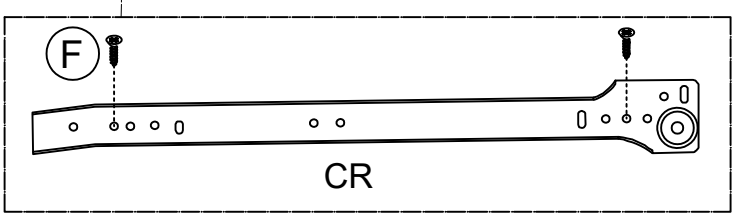

For product support or inguiries, please reach out to us at harpaqservice@gmail.com

STEP 13

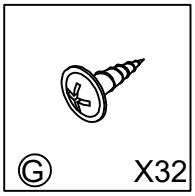

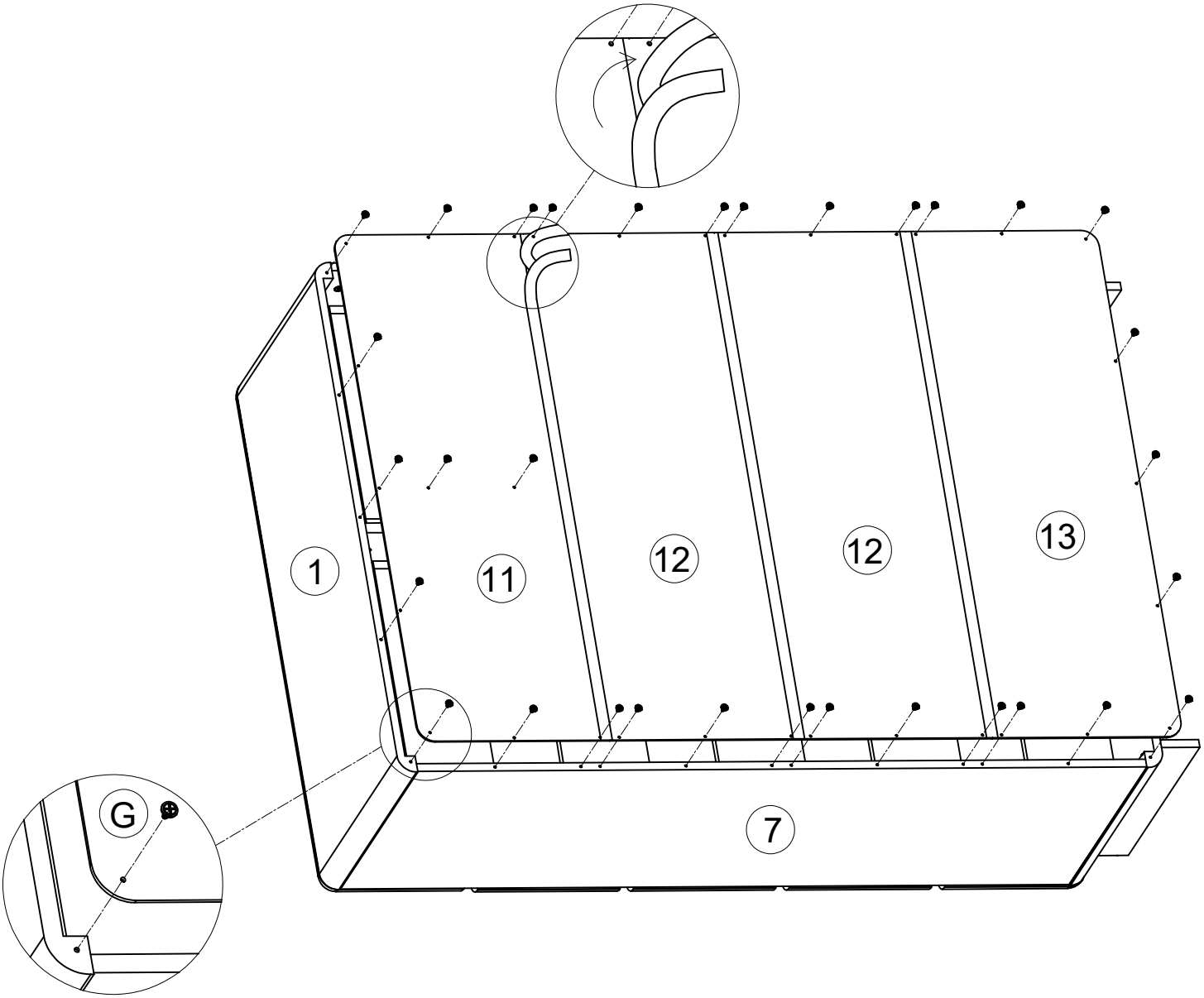

For product support or inguiries, please reach out to us at harpaqservice@gmail.com

STEP 14

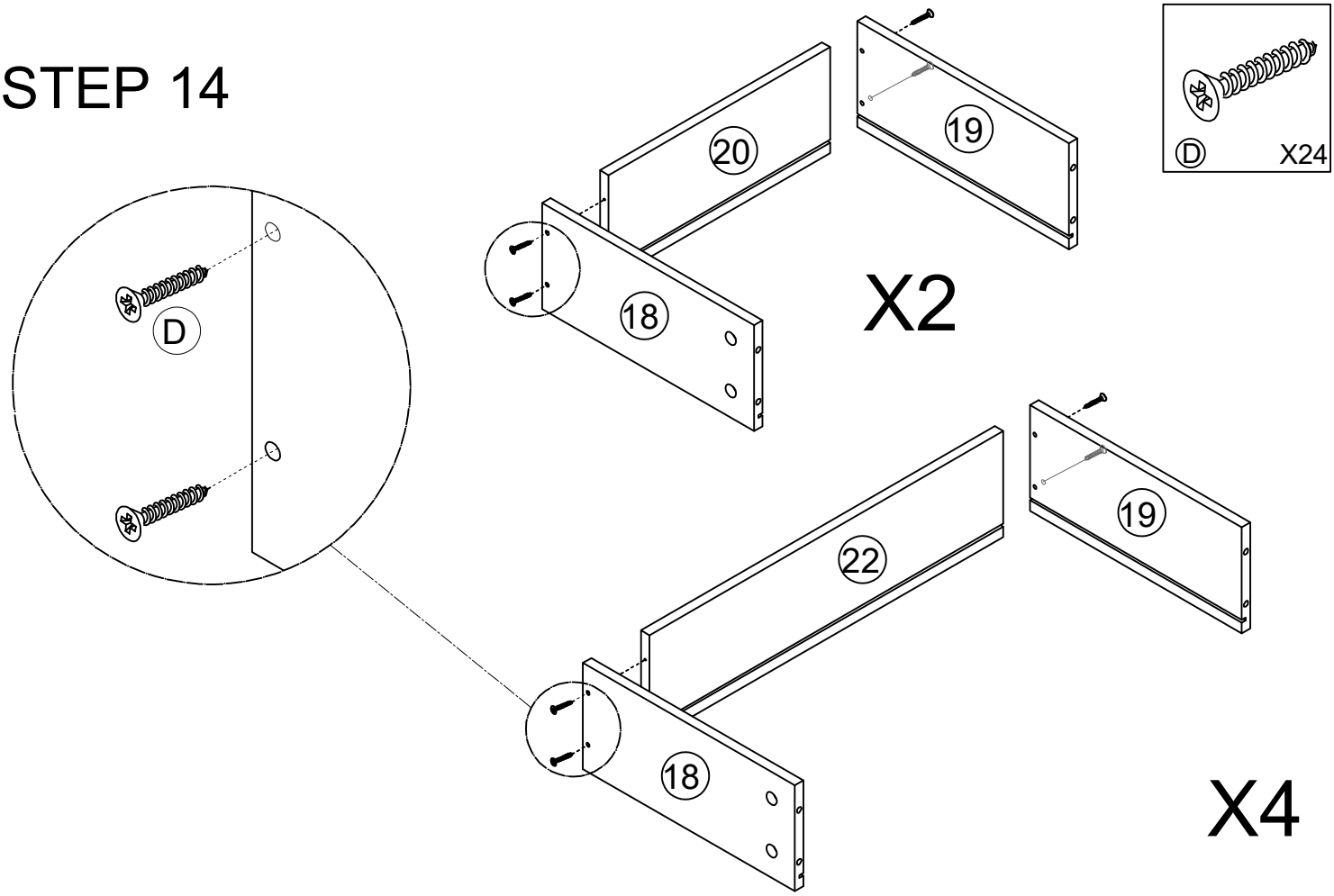

STEP 15

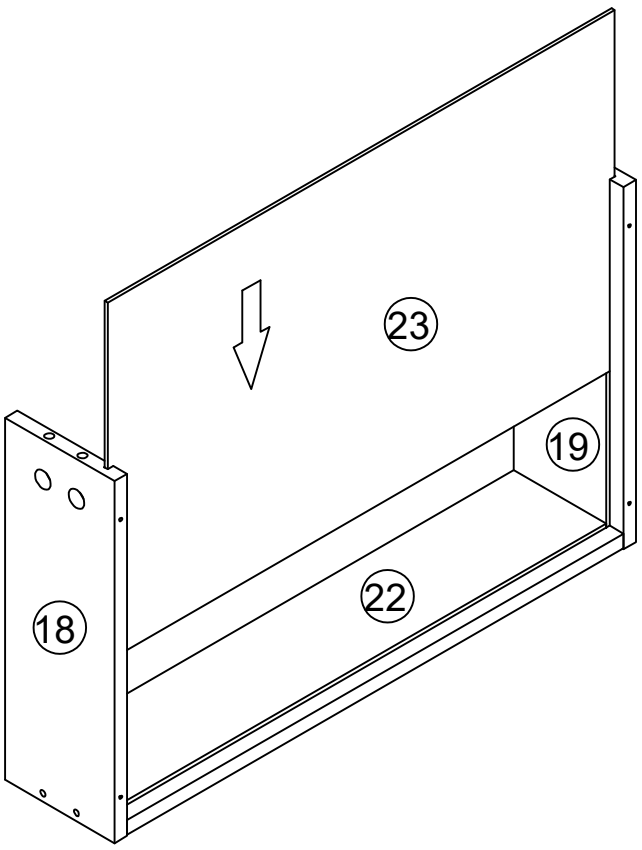

For product support or inguiries, please reach out to us at harpaqservice@gmail.com

STEP 16

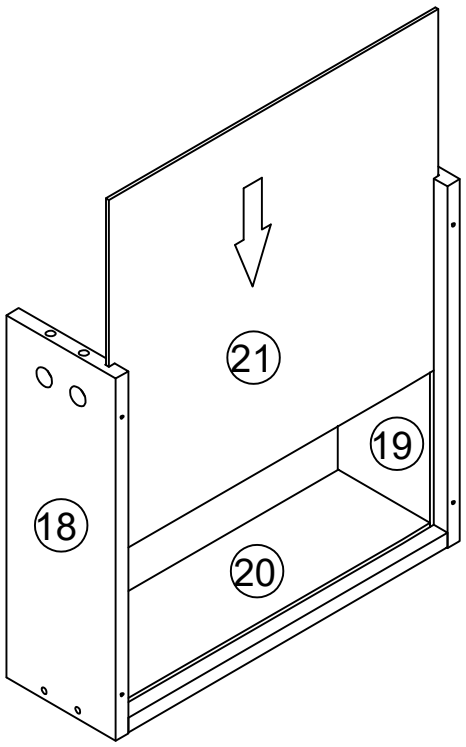

X2

STEP 17

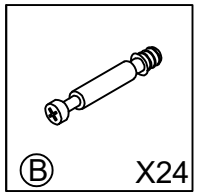

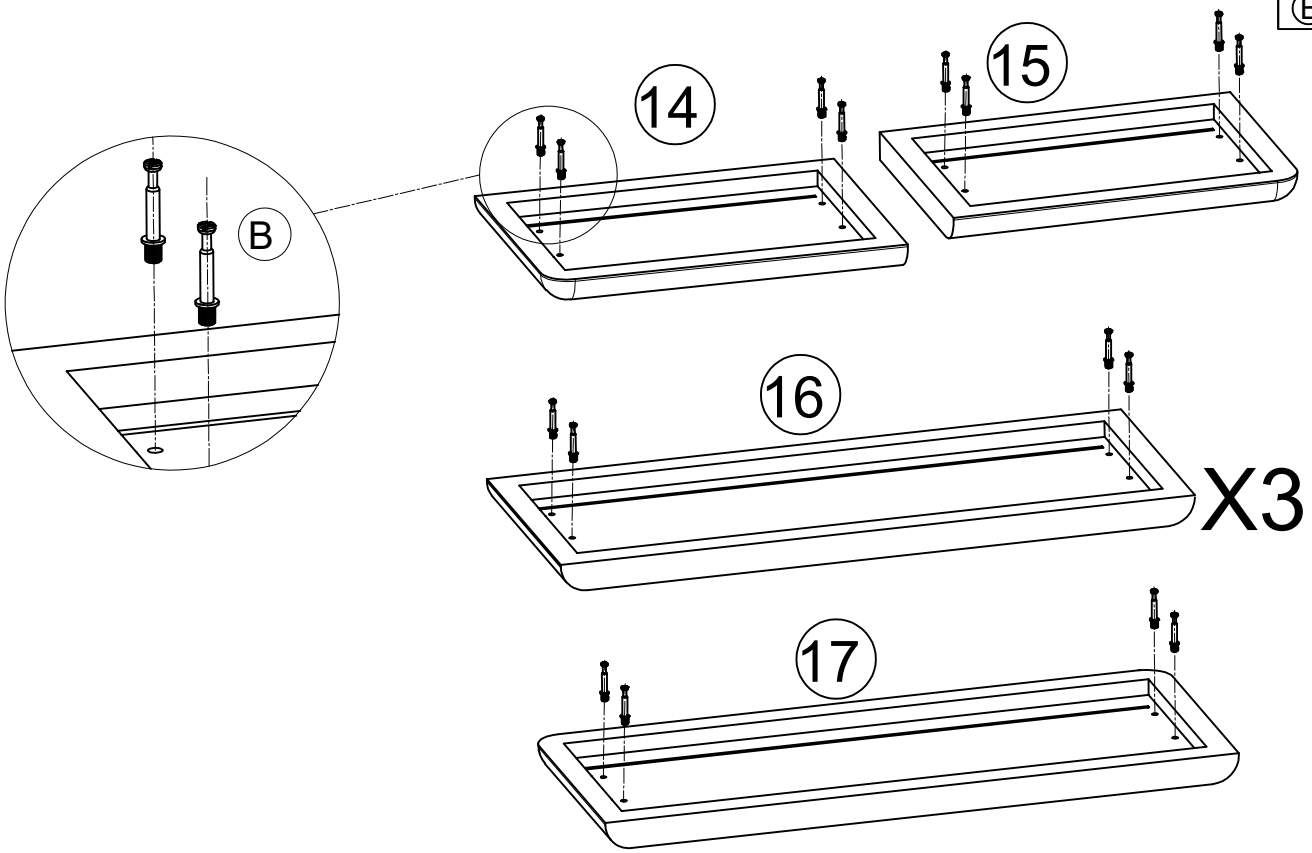

X3

For product support or inguiries, please reach out to us at harpaqservice@gmail.com

STEP 18

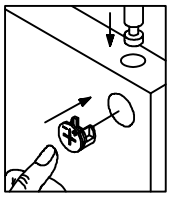

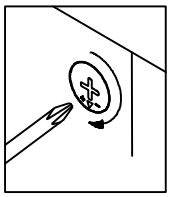

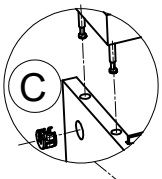

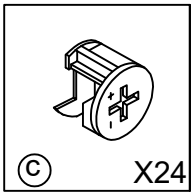

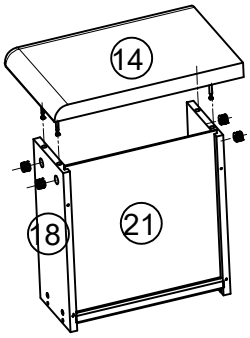

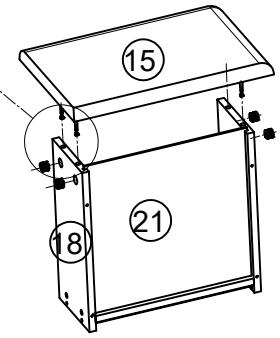

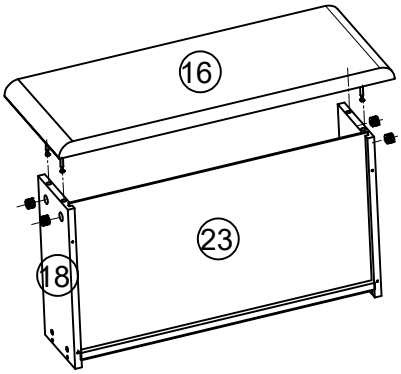

X3

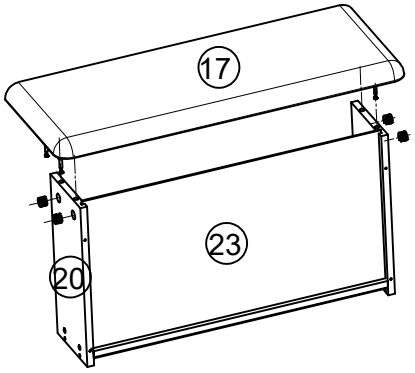

STEP 19

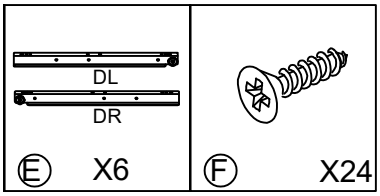

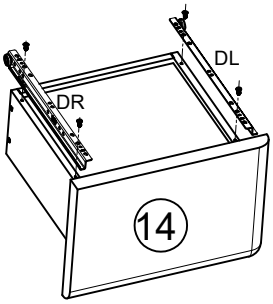

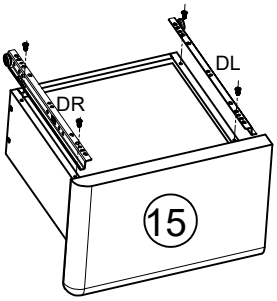

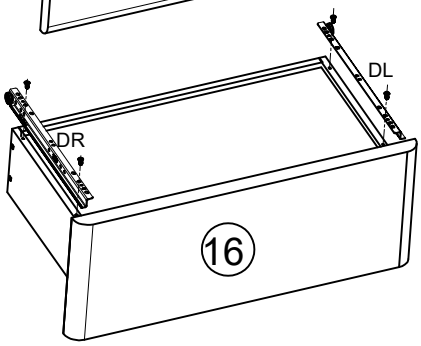

X3

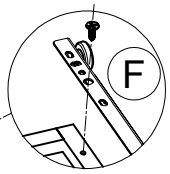

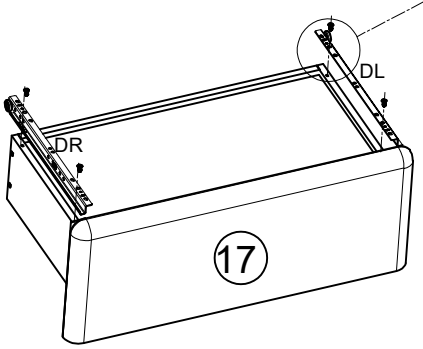

For product support or inguiries, please reach out to us at harpaqservice@gmail.com

STEP 20

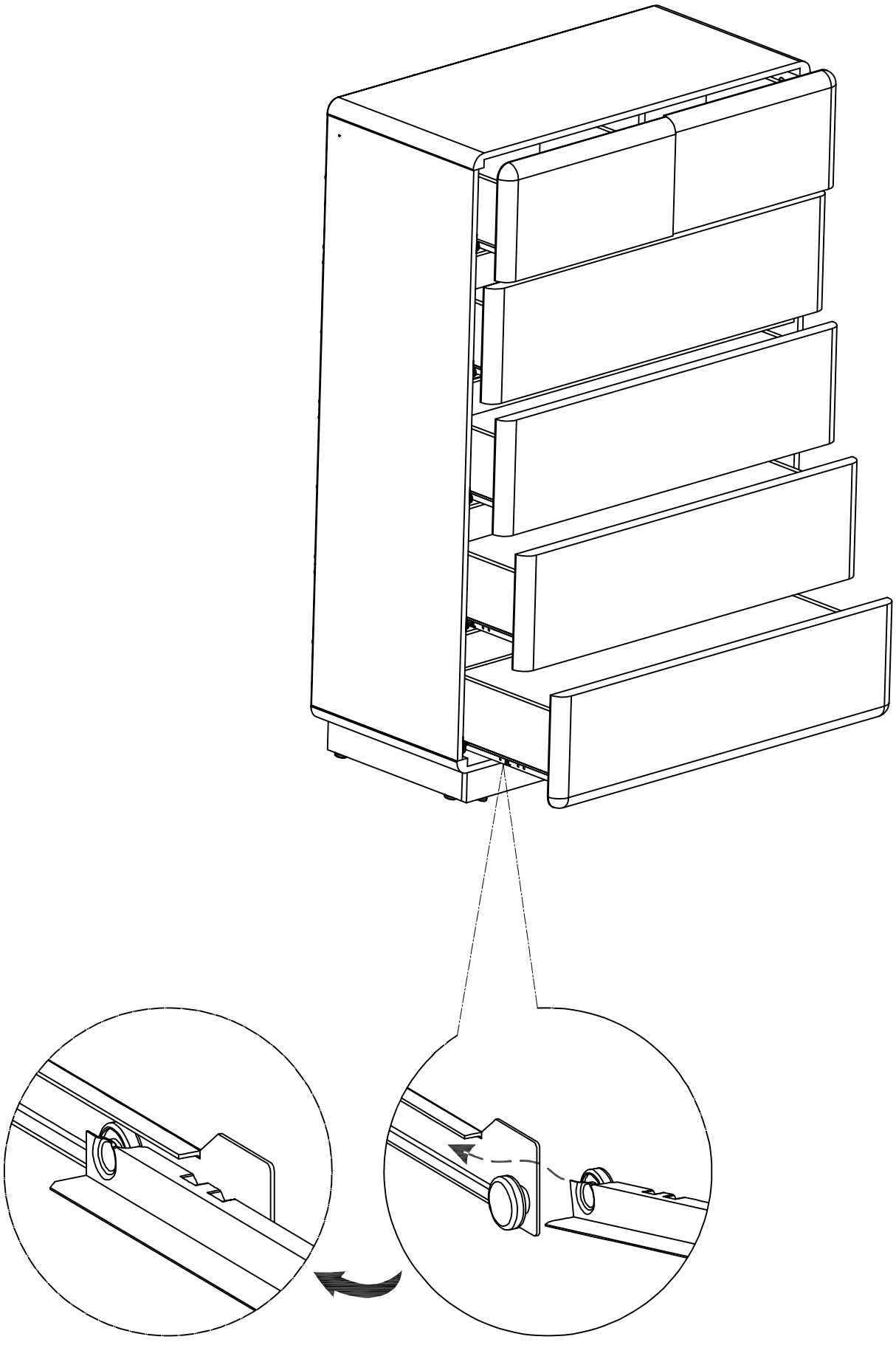

STEP 21

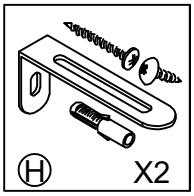

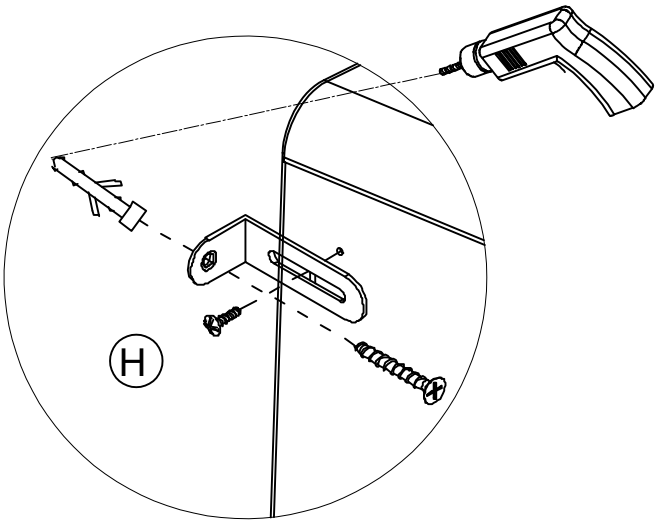



▲ WARNING





Children have died from furnituretipover. To reduce the risk offurniture tipover:

- ALWAYS install anti-tip deviceprovided.
- NEVER put a TV on this product.
- NEVER allow children to stand, climbor hang on any drawers, doors, or shelves.
- NEVER open more than one drawer ata time.
- Place heaviest items in the lowestdrawers.

his is a permanent label.
Do not remove!