ModernMate

ASSEMBLY INSTRUCTION

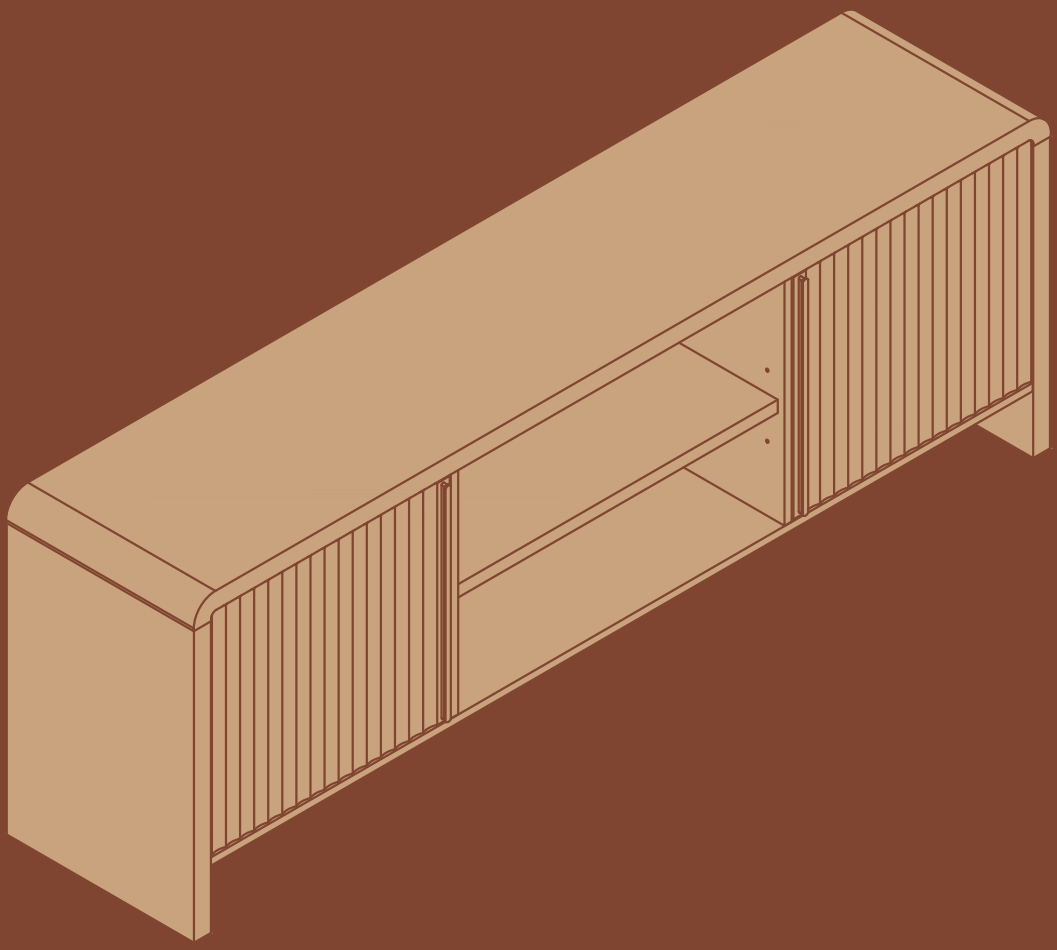

Television Cabinet

CATALOGUE

Precautions 01

Parts List 02

Hardware List 03-04

Tool List 05

Assembly Process 06-31

INTRODUCTION

Thank you for purchasing our products. Please read the instructions carefully before installation and keep it in a safe place for future reference. If you need any assistance or support, please feel free to contact our customer support team.

PRECAUTIONS

This package contains numerous components and hardware pieces. Please identify and verify all parts against the parts list before you begin assembly.

WARNING: Choking Hazard. This product contains small items. Keep all parts and hardware out of the reach of children during assembly.

To prevent scratches, assemble the product on a soft, non-abrasive surface such as a carpet, blanket, or the flattened cardboard packaging.

Some components are heavy. For safety, we recommend this product be assembled by two adults.

The unit may be unstable until assembly is fully complete. Do not move the product until all steps are finished.

If you encounter any issues or have questions, please contact our customer service team for assistance.

* Please be sure to follow the installation steps in the manual to avoid unnecessary losses caused by improper installation.
* If you need further assistance, please contact the customer service online.

  After-Sales Service Hotline: (800)661-5928

Parts List

ID	Parts	QTY
1		1
2		1
3	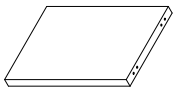	1
4	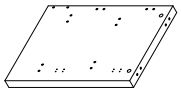	1
5		1
6	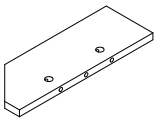	2
7	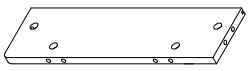	1
8		1
9	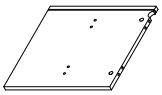	1
10	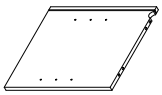	1

ID	Parts	QTY
11	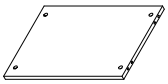	2
12		1
13	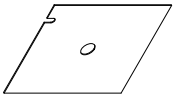	2
14	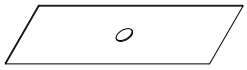	2
15		1
16	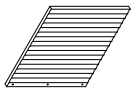	1
17	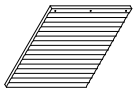	1

Hardware List

ID	Parts	QTY
A		40+2
B		40+2
C	 Ø8*30mm	36+2
D	 M7*48	8+2
E		1
F	 Ø3.5*14mm	40+2
G	 M4*22mm	6+2
H	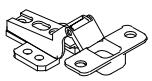	4
I		12+2
J	 Ø30*M6*15mm	6

ID	Parts	QTY
K		2
L	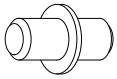	4
M	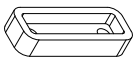	2
N	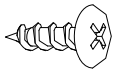 Ø4*14mm	2
O		2
P		2
Q	 Ø4*35mm	2
R	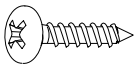 Ø3*12mm	3
S	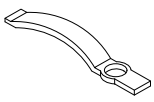	3
T	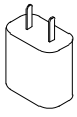	1

Hardware List

ID	Parts	QTY
U	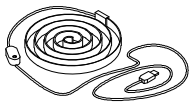	1
V	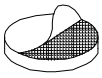	40+2

Tool List

Screw driver (not included) is required for the assembly of this product.

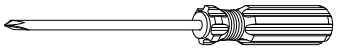

Required Tools (Not Included)

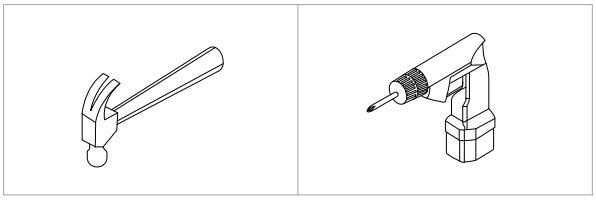

Wall mounting only
These tools are not required for product assembly.

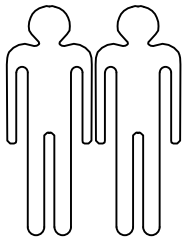

Multi-person installation

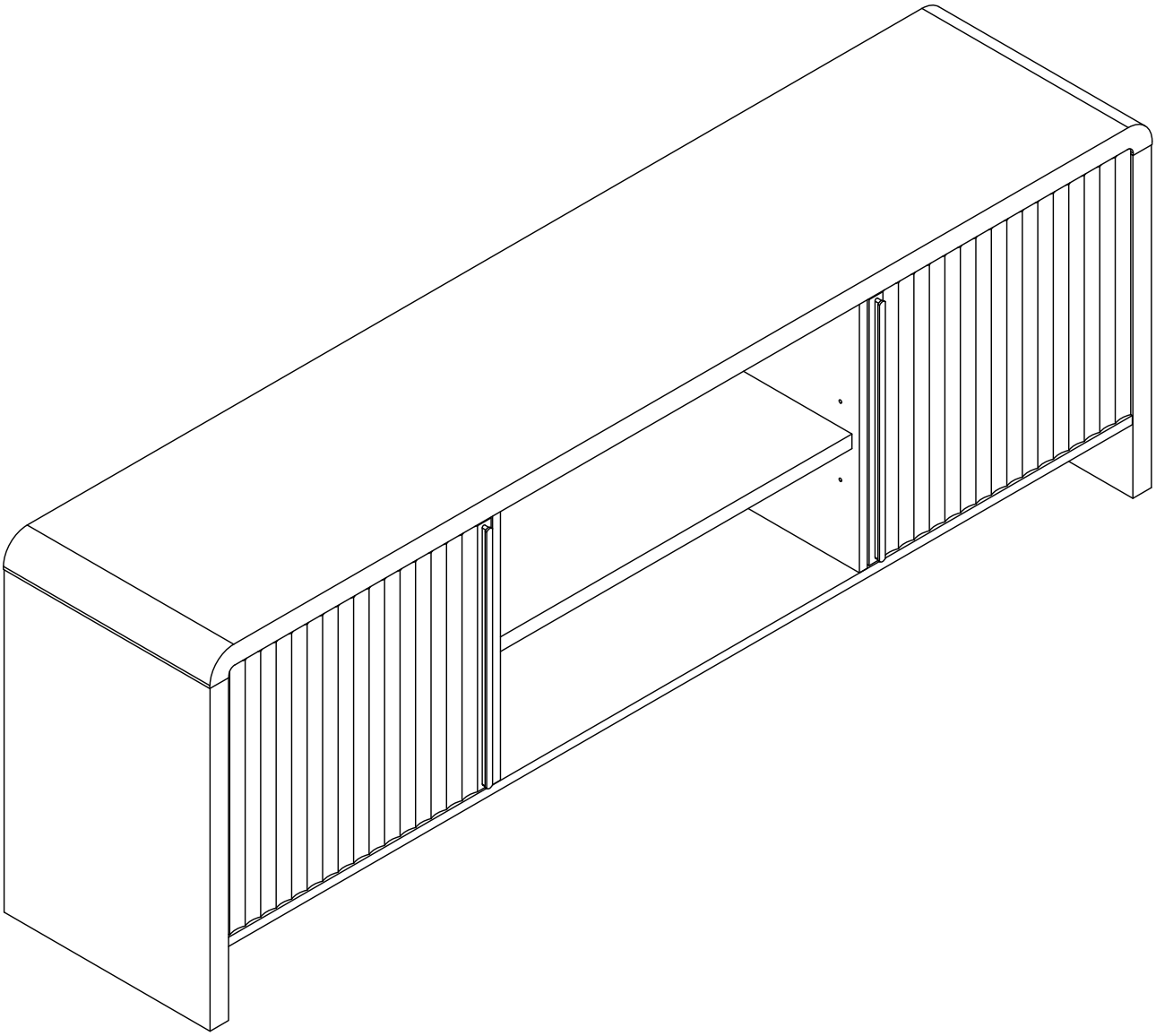

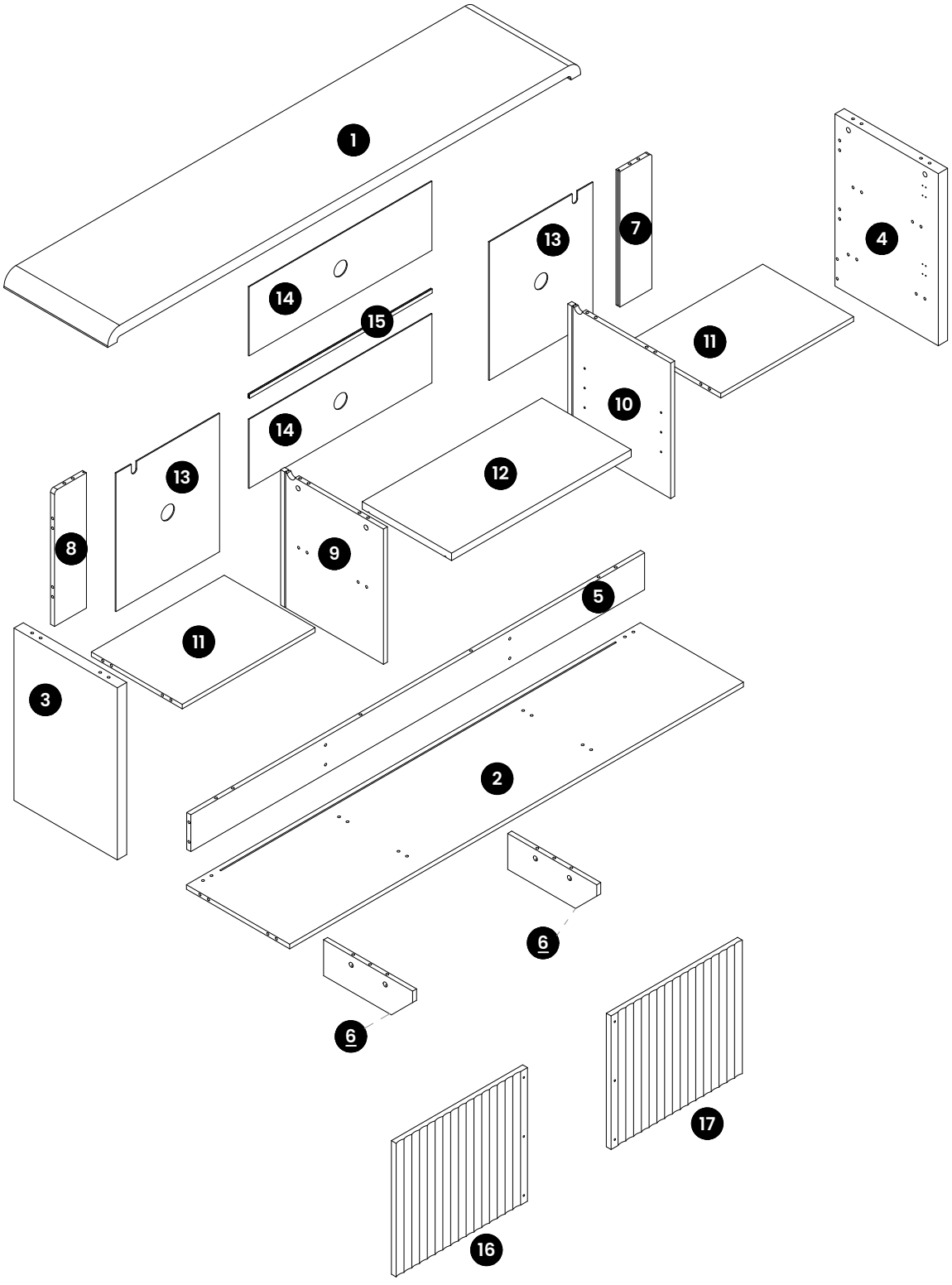
1
14
15
13
7
4
11
10
14
13
12
8
9
5
11
3
2
6
6
17
16

STEP 1

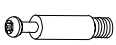

A X10

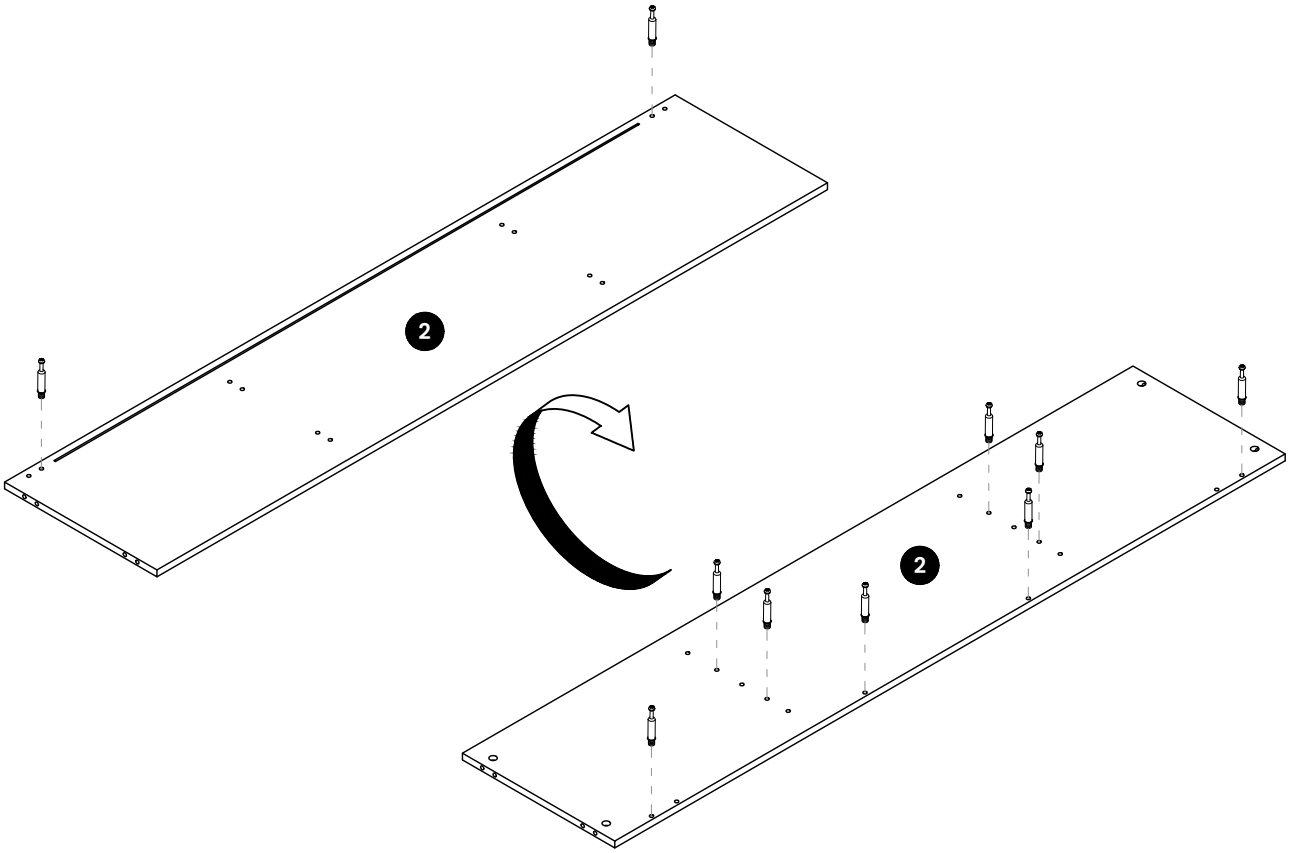

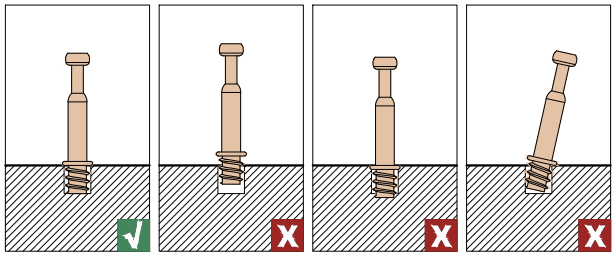

Install the screw correctly to secure the screw.

STEP 2

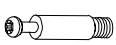

A X 4

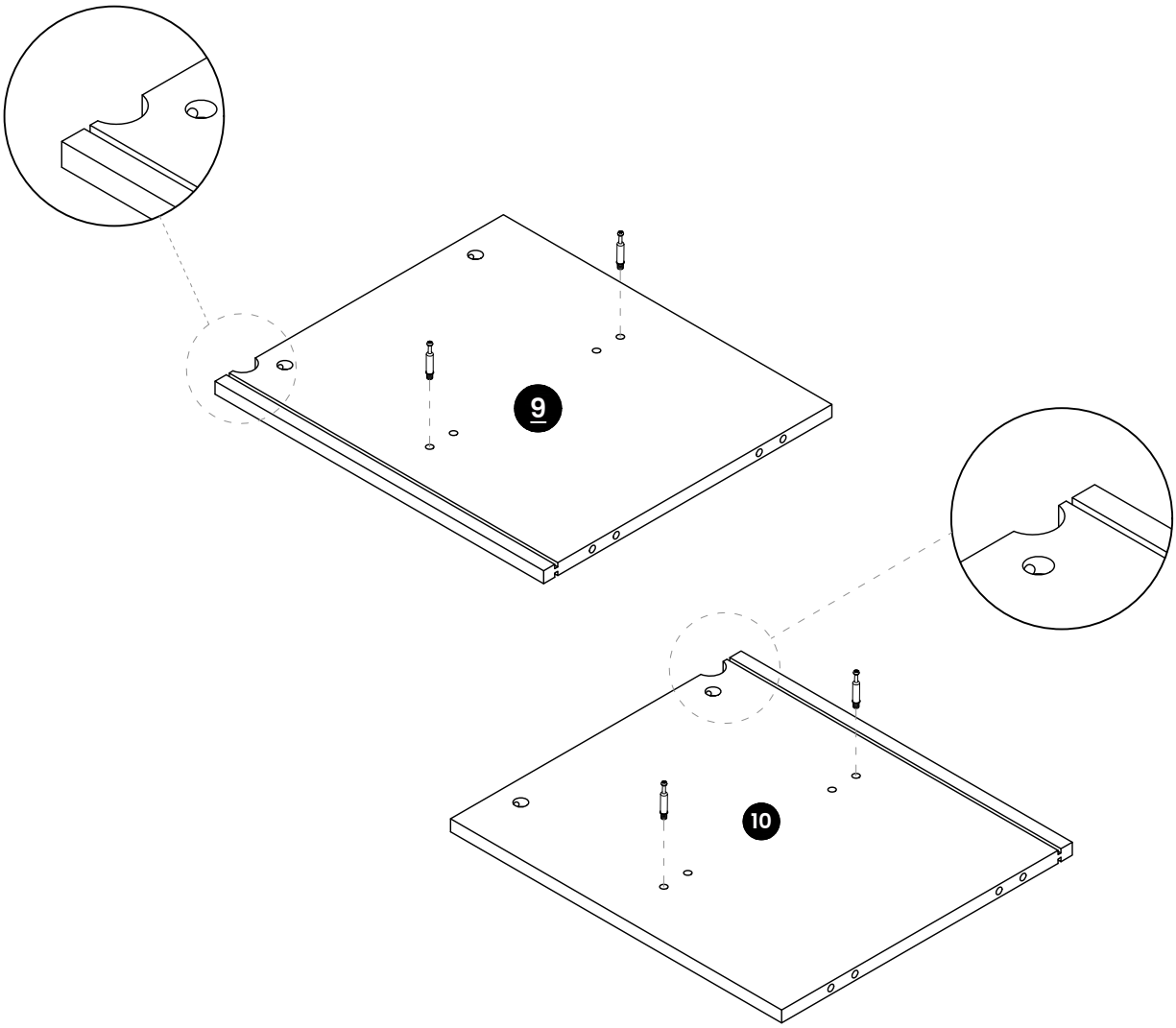

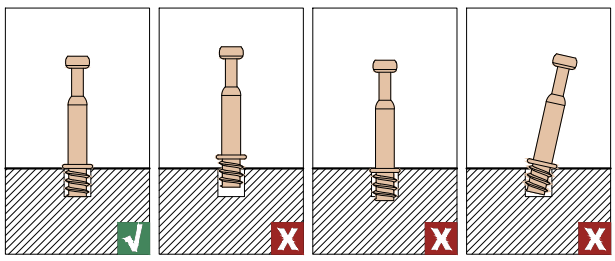

Install the screw correctly to secure the screw.

STEP 3

	B X 4
	C X 4

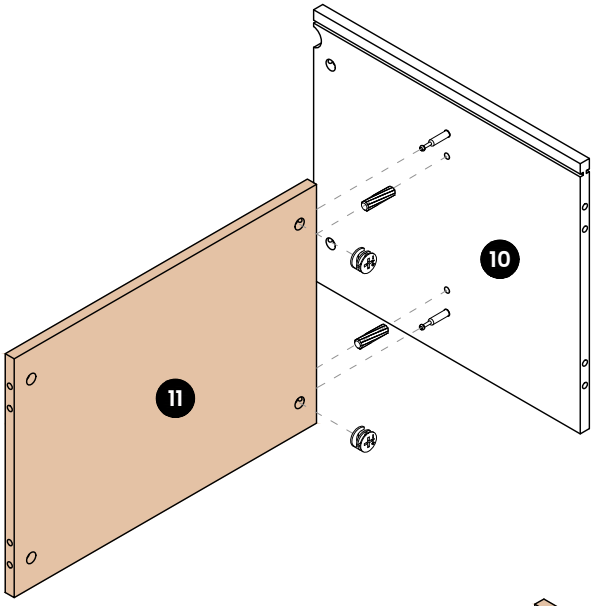

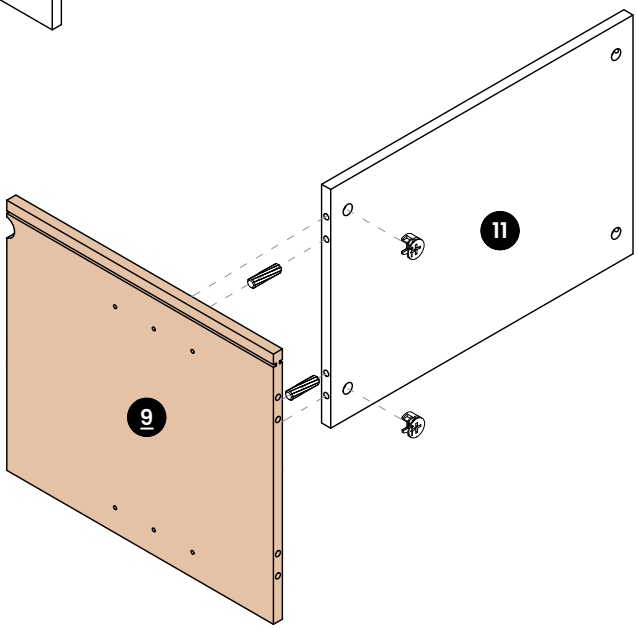

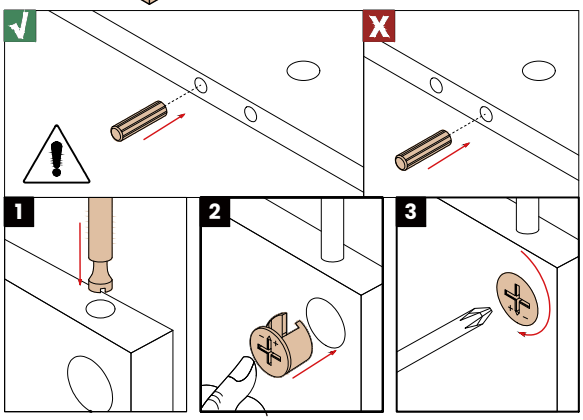

STEP 4


C X4


D X4


E X1

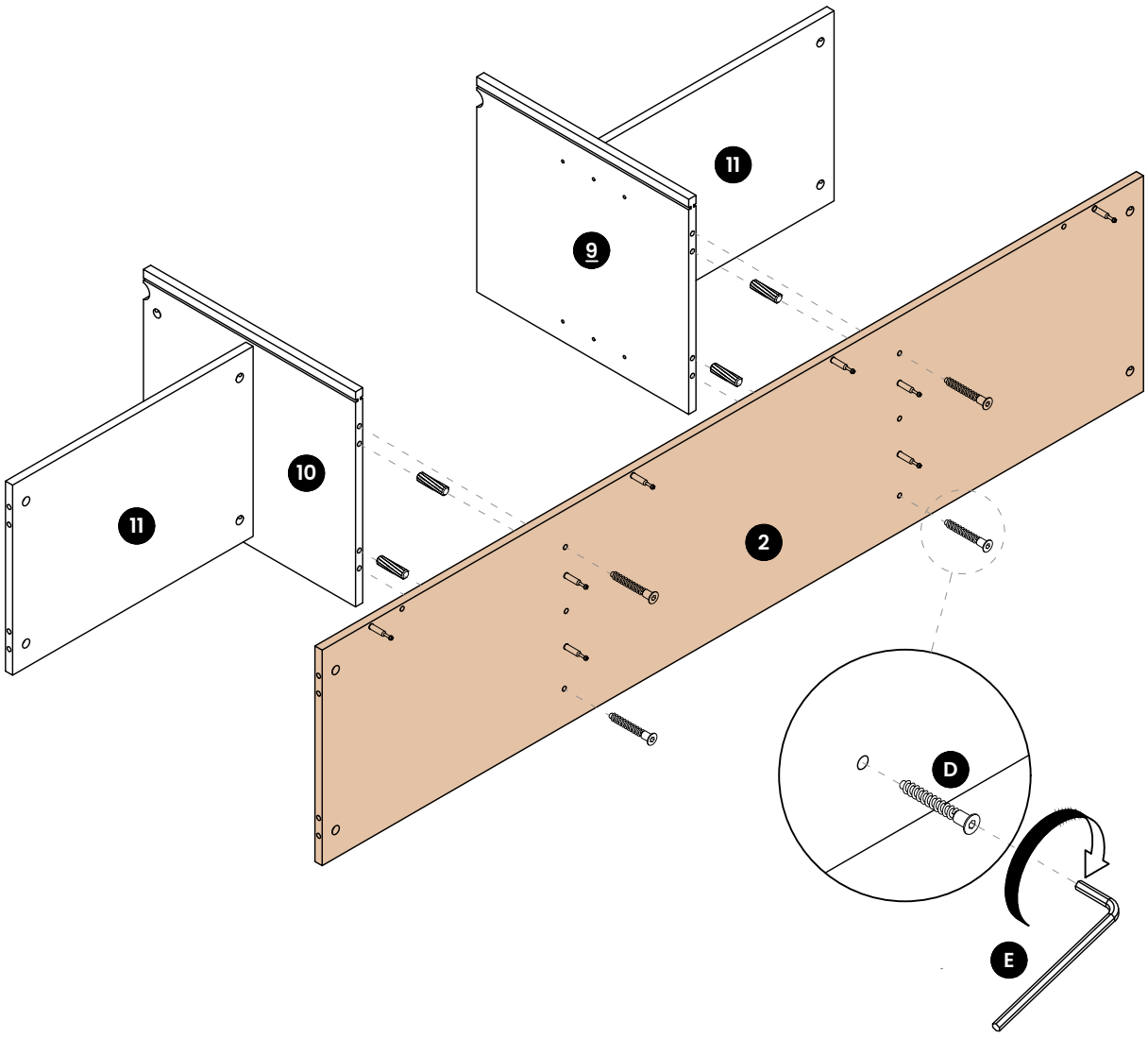

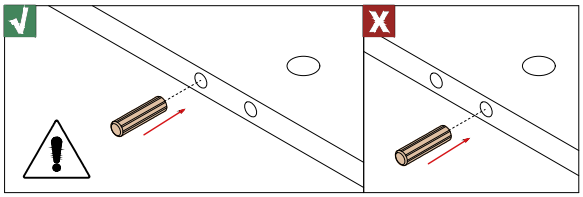

STEP 5



B X2



C X2

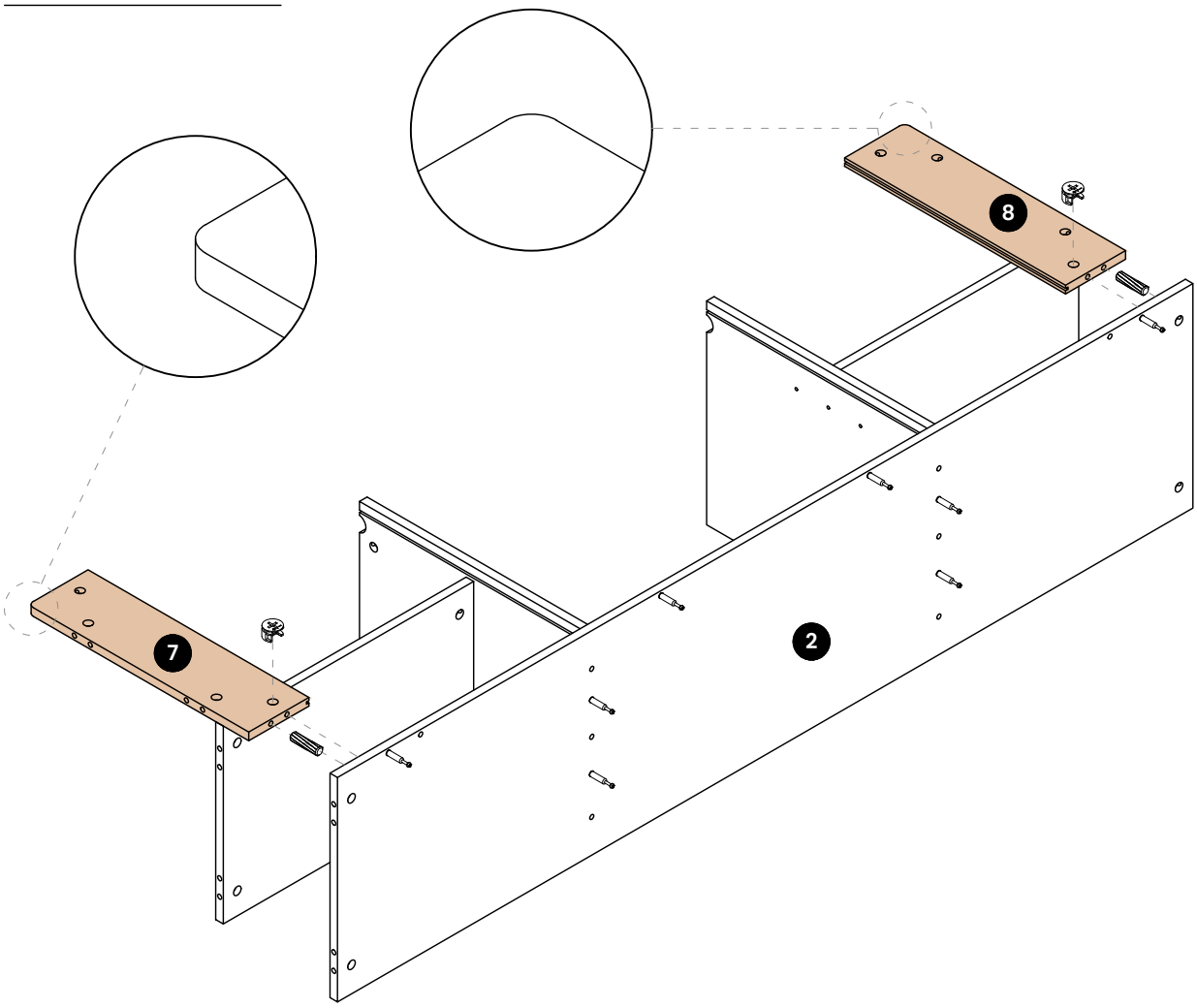

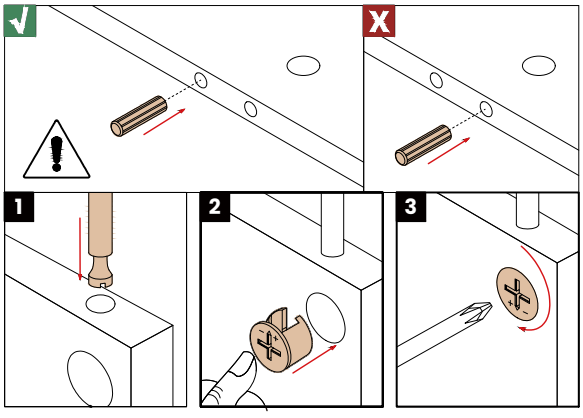

STEP 6

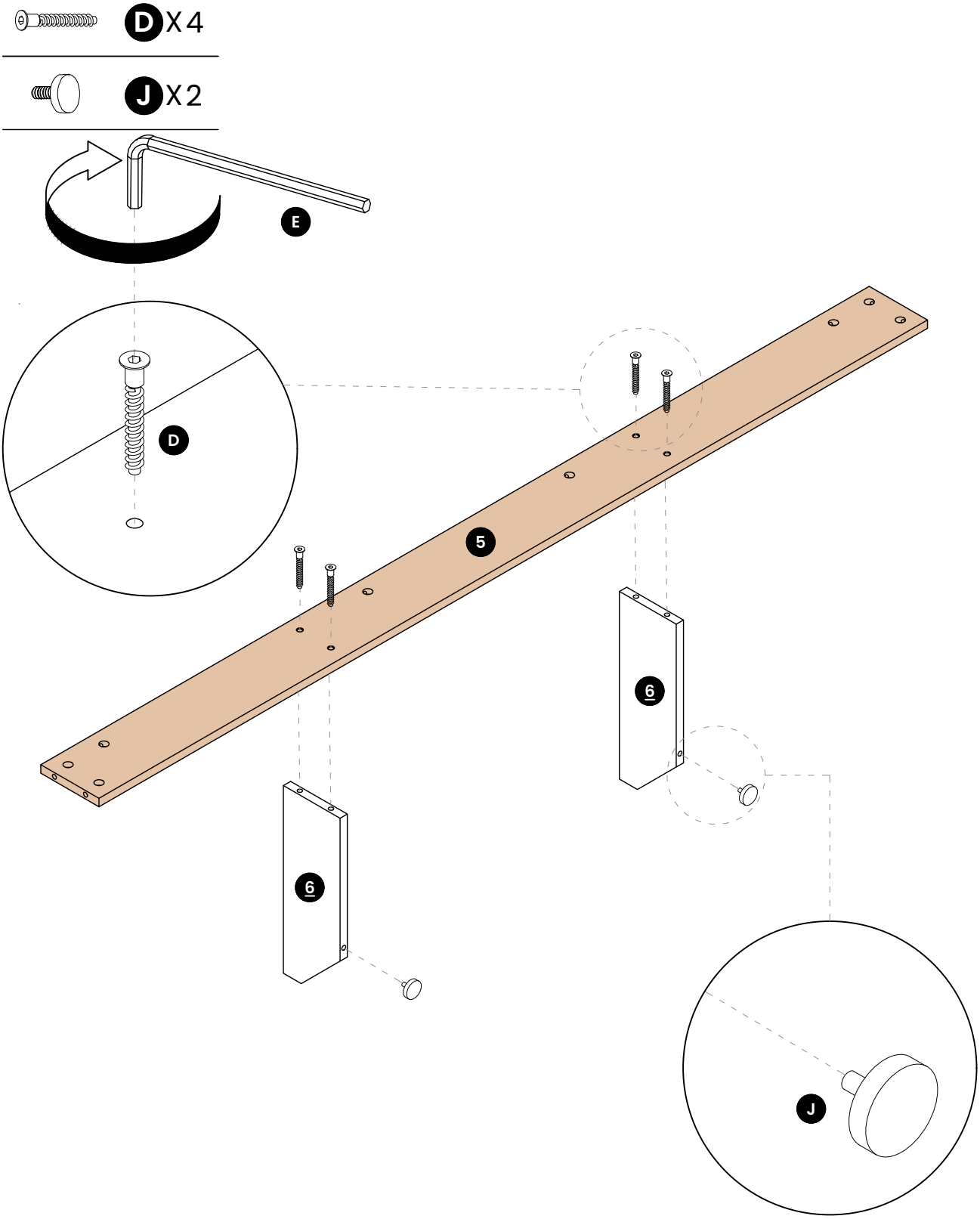

STEP 7



B X8



C X4

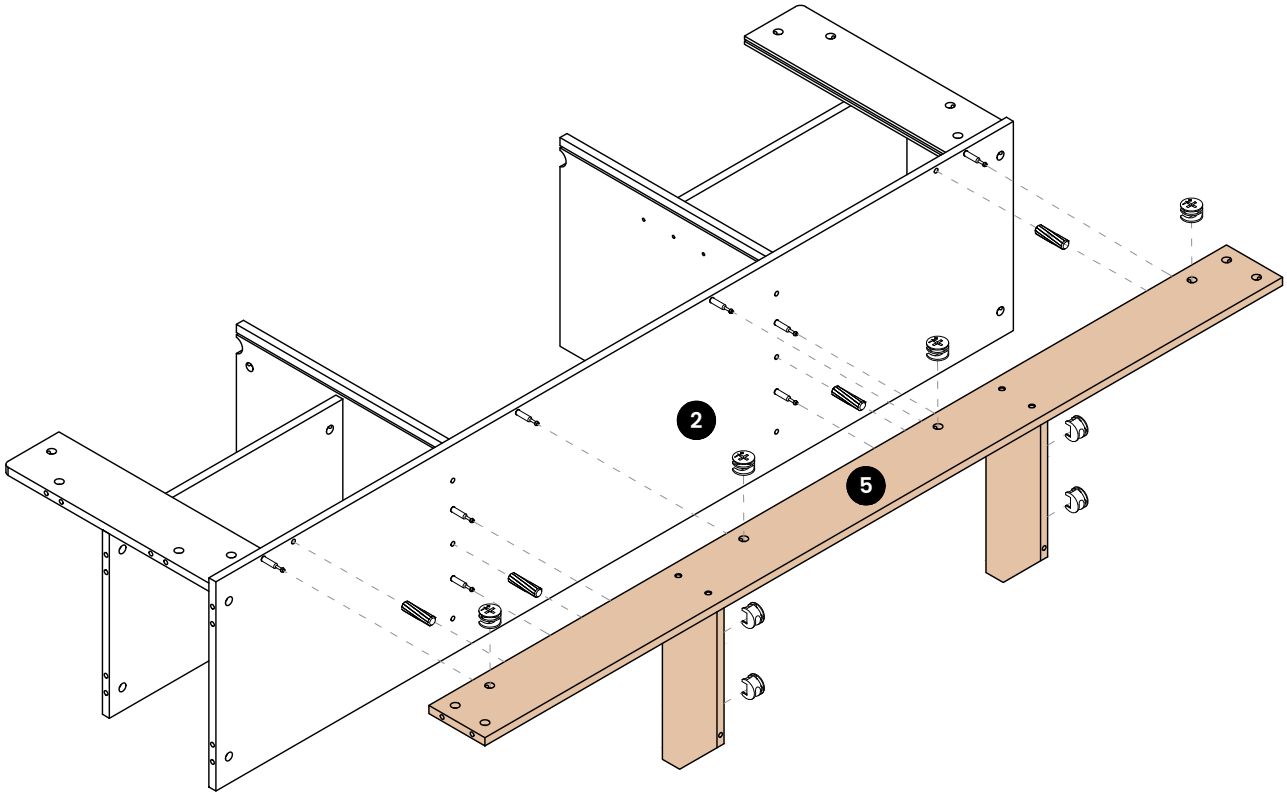

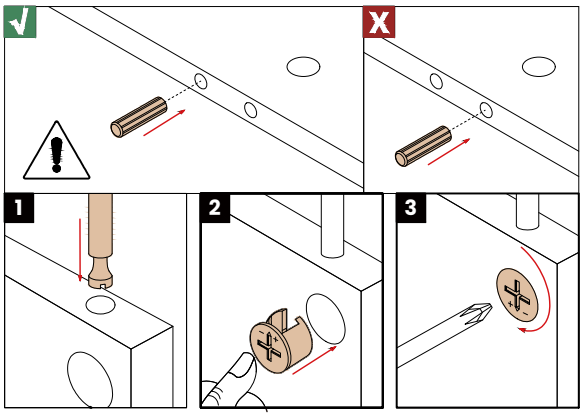

STEP 8

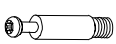

A X16



J X4

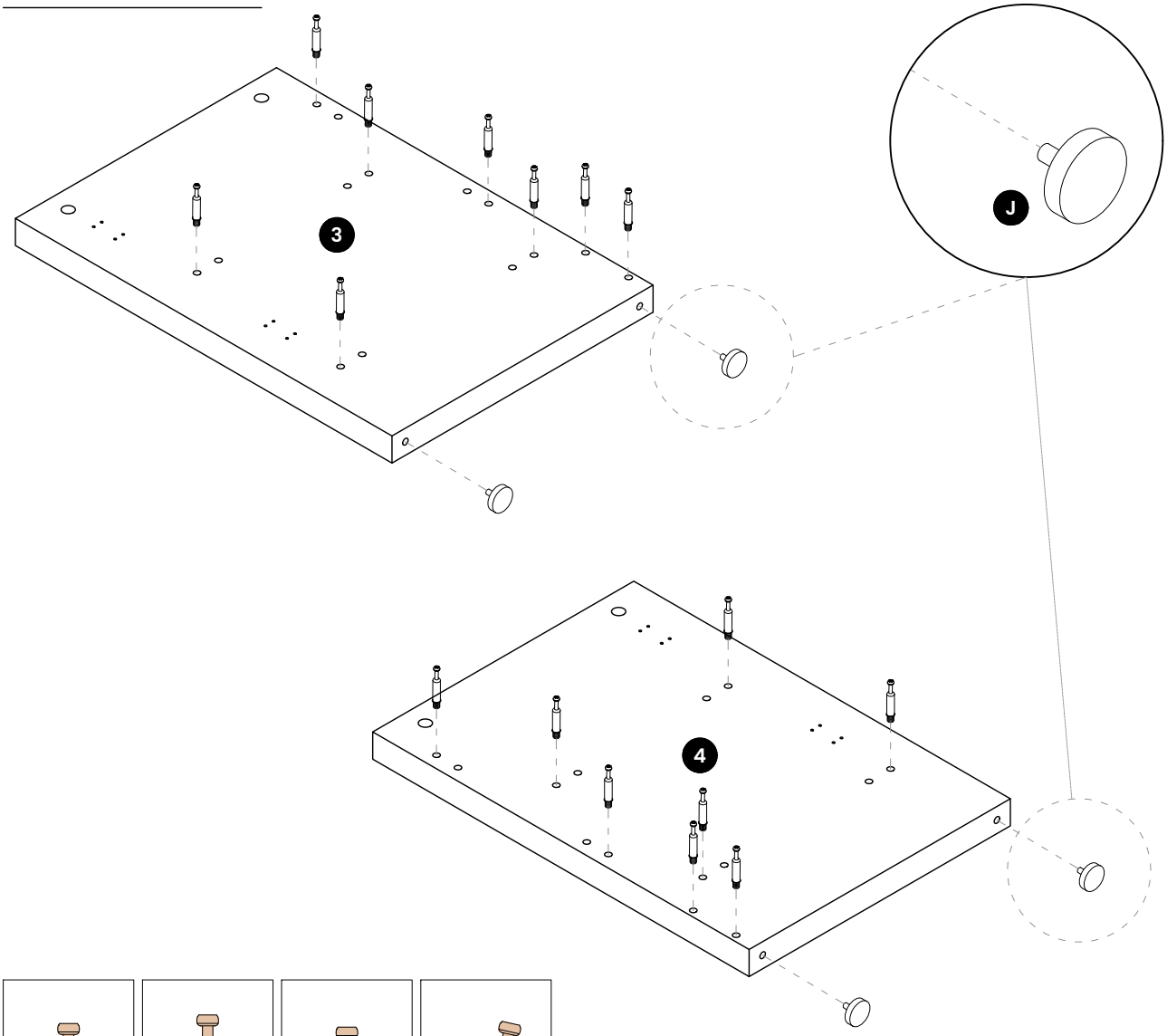

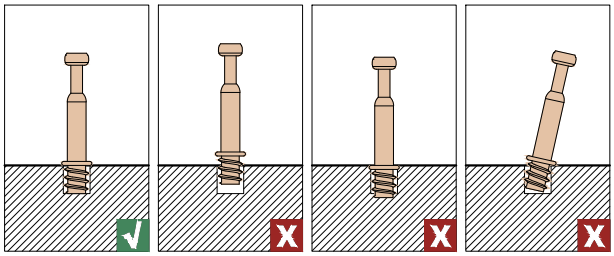

Install the screw correctly to secure the screw.

STEP 9



B X 8



C X 6

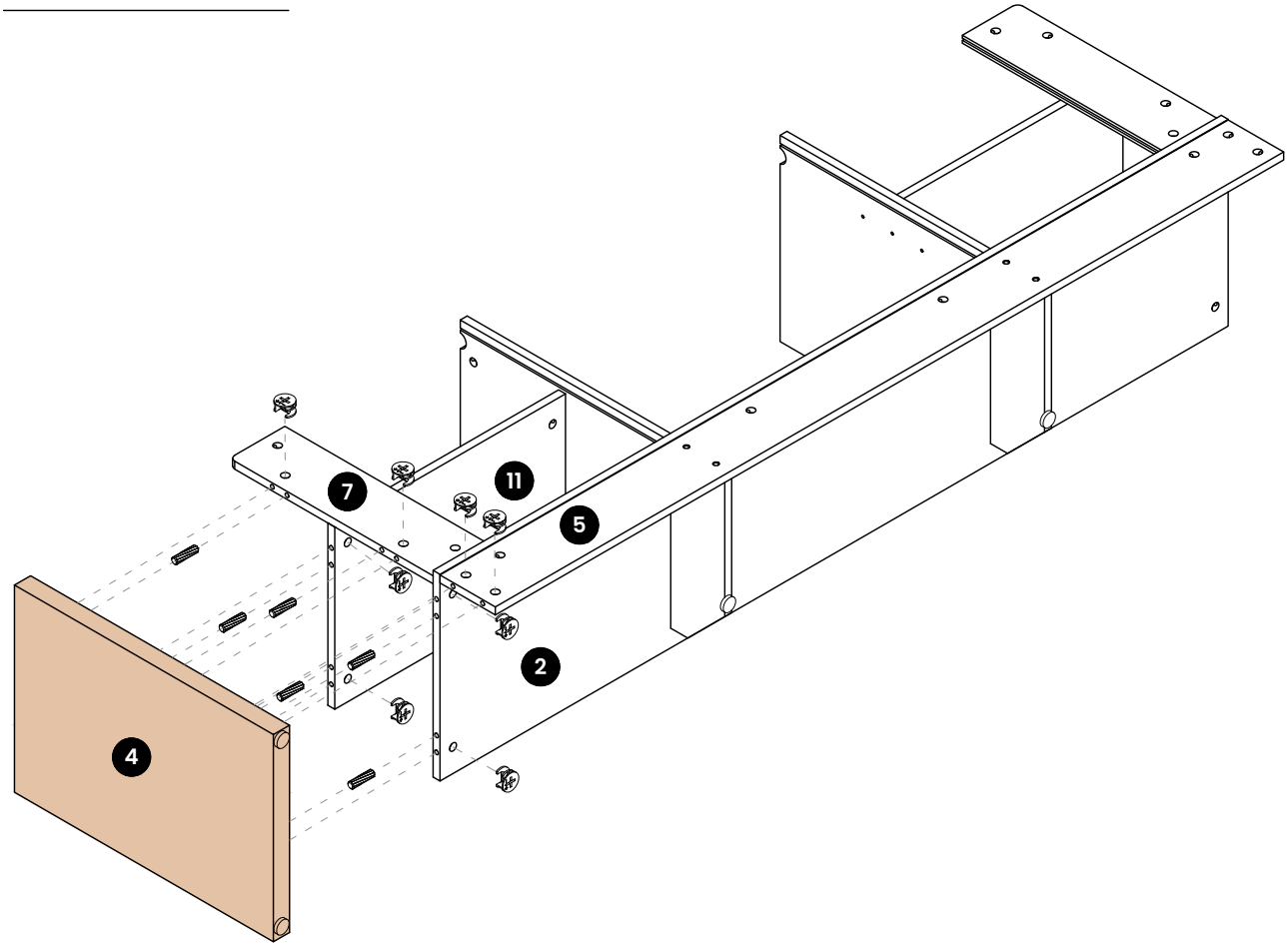

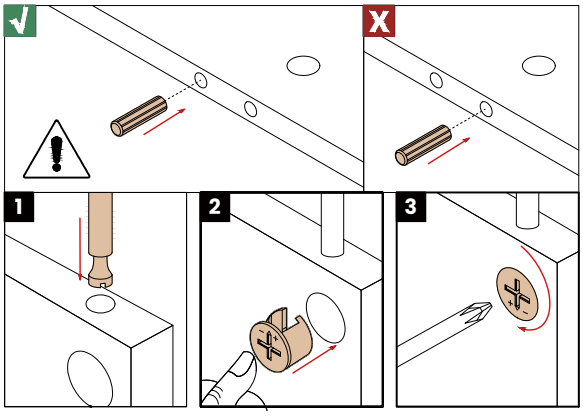

STEP 10



B X 8



C X 6

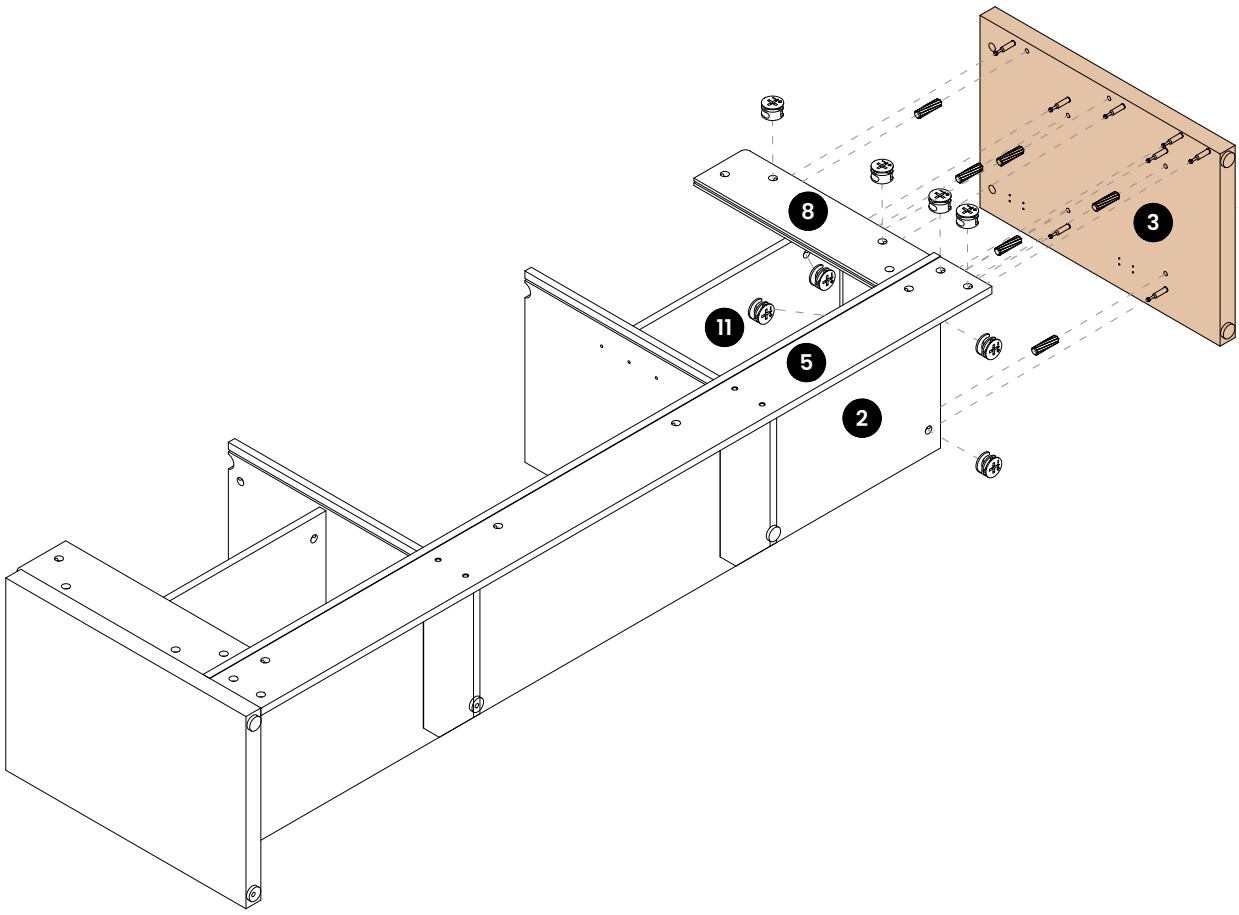

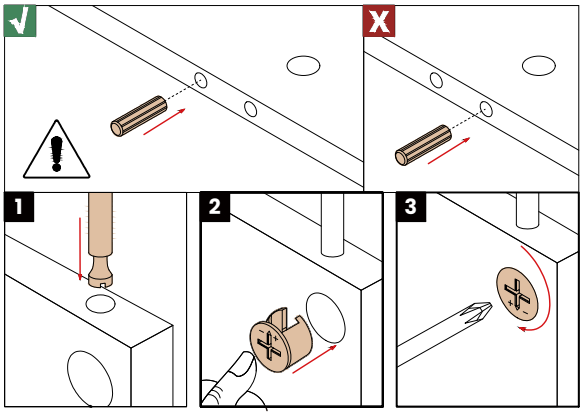

STEP 11

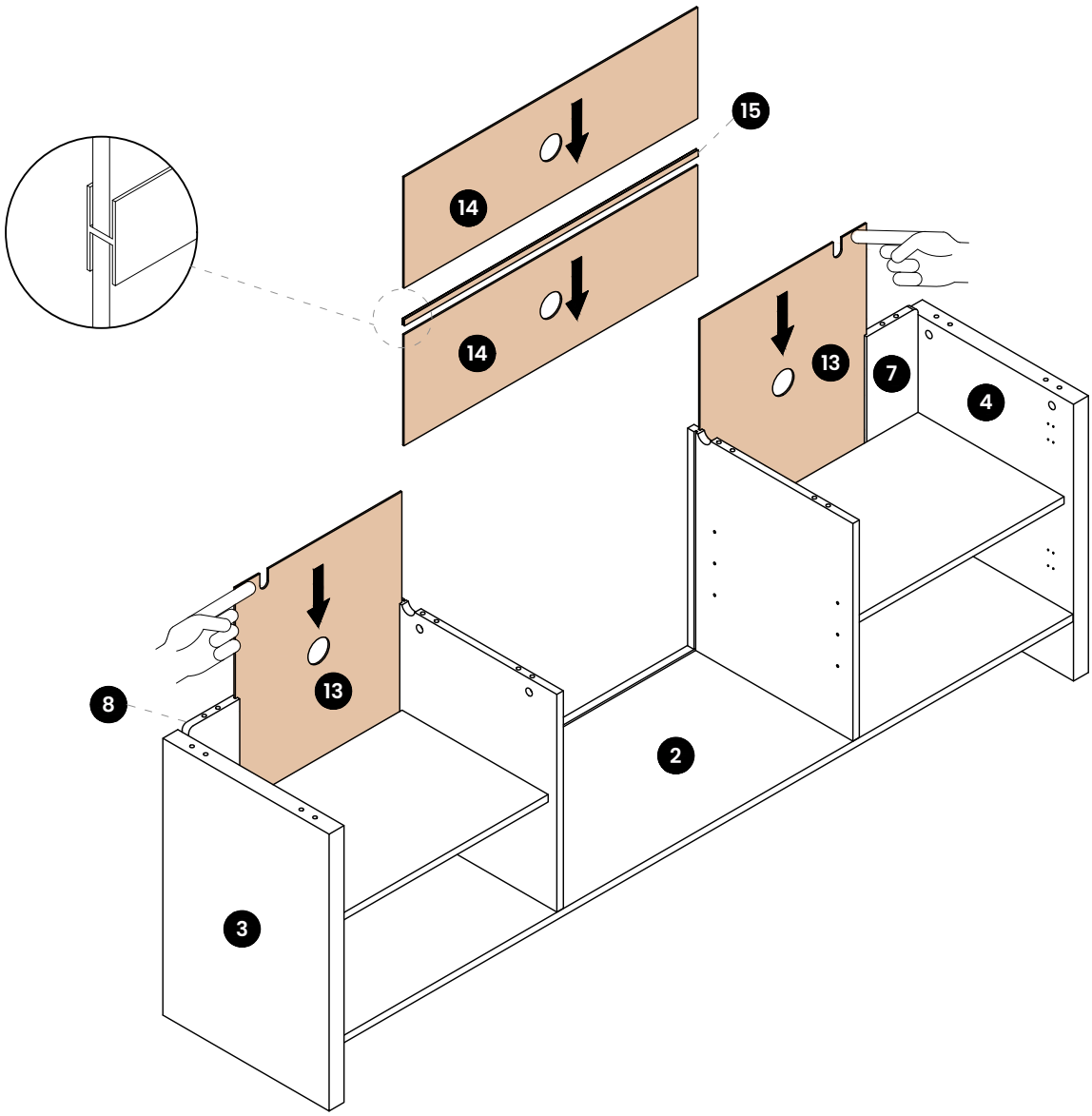

STEP 12

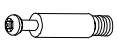
A X10


N X2

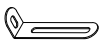
O X2


F X4


M X2

STEP 13

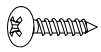
R X3


S X3


U X1

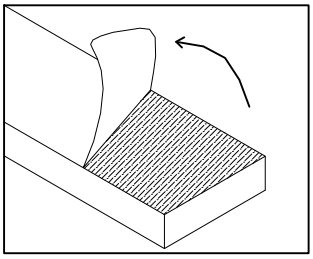

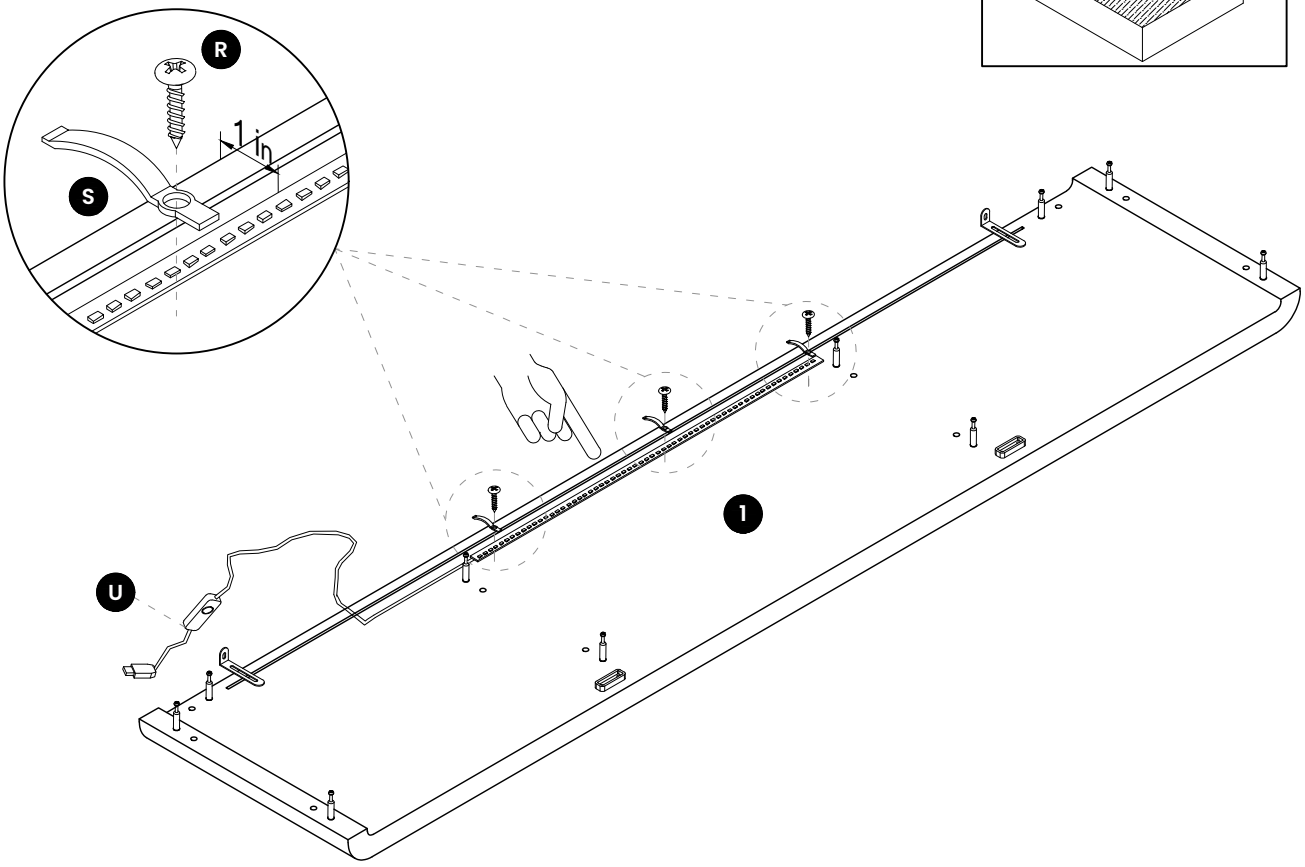

STEP 14



B X10



C X10

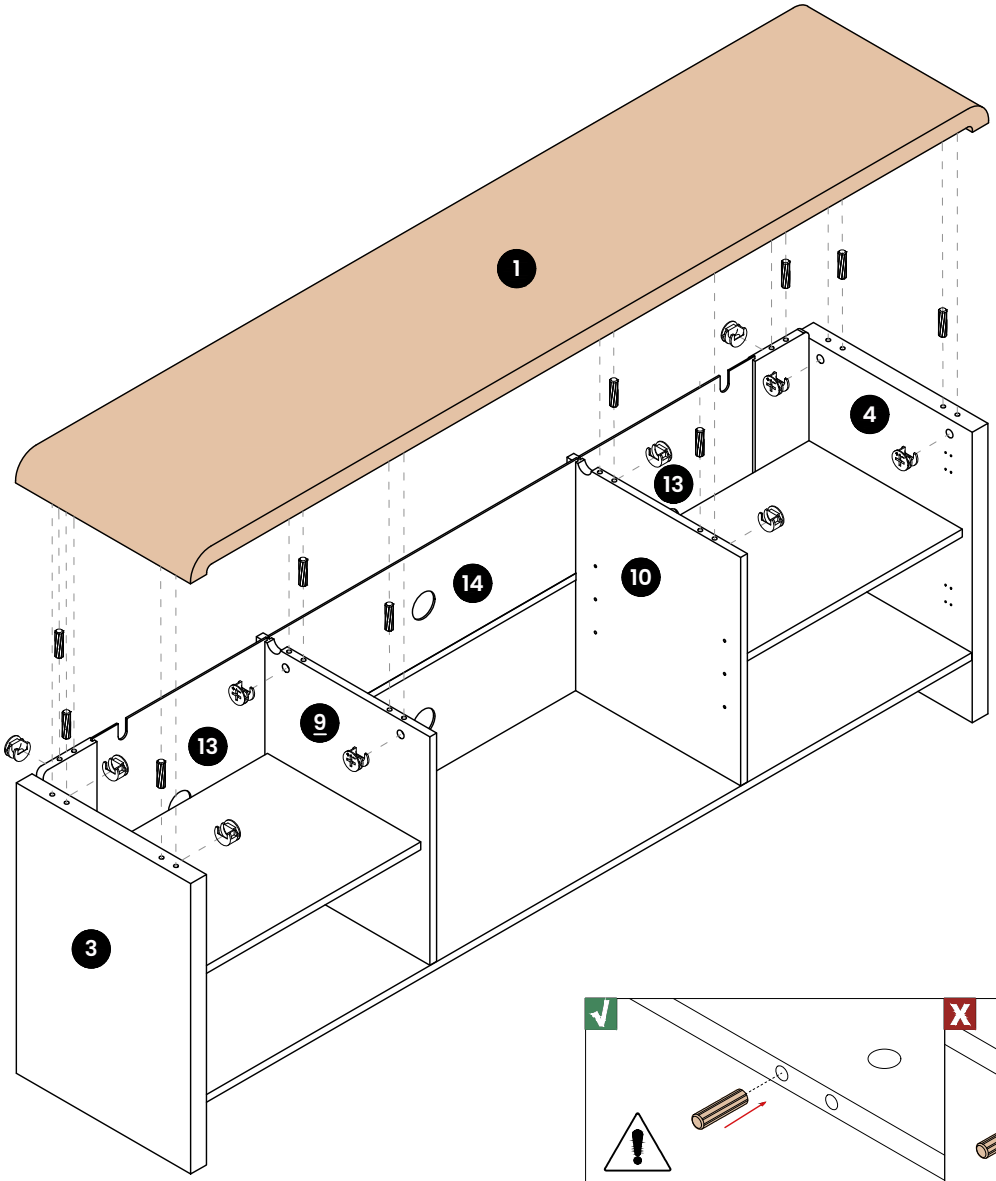

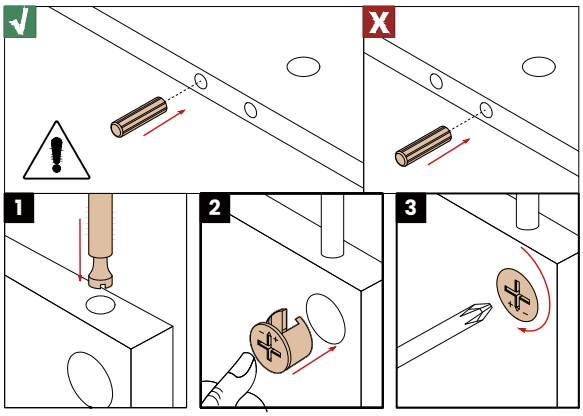

STEP 15



T X1

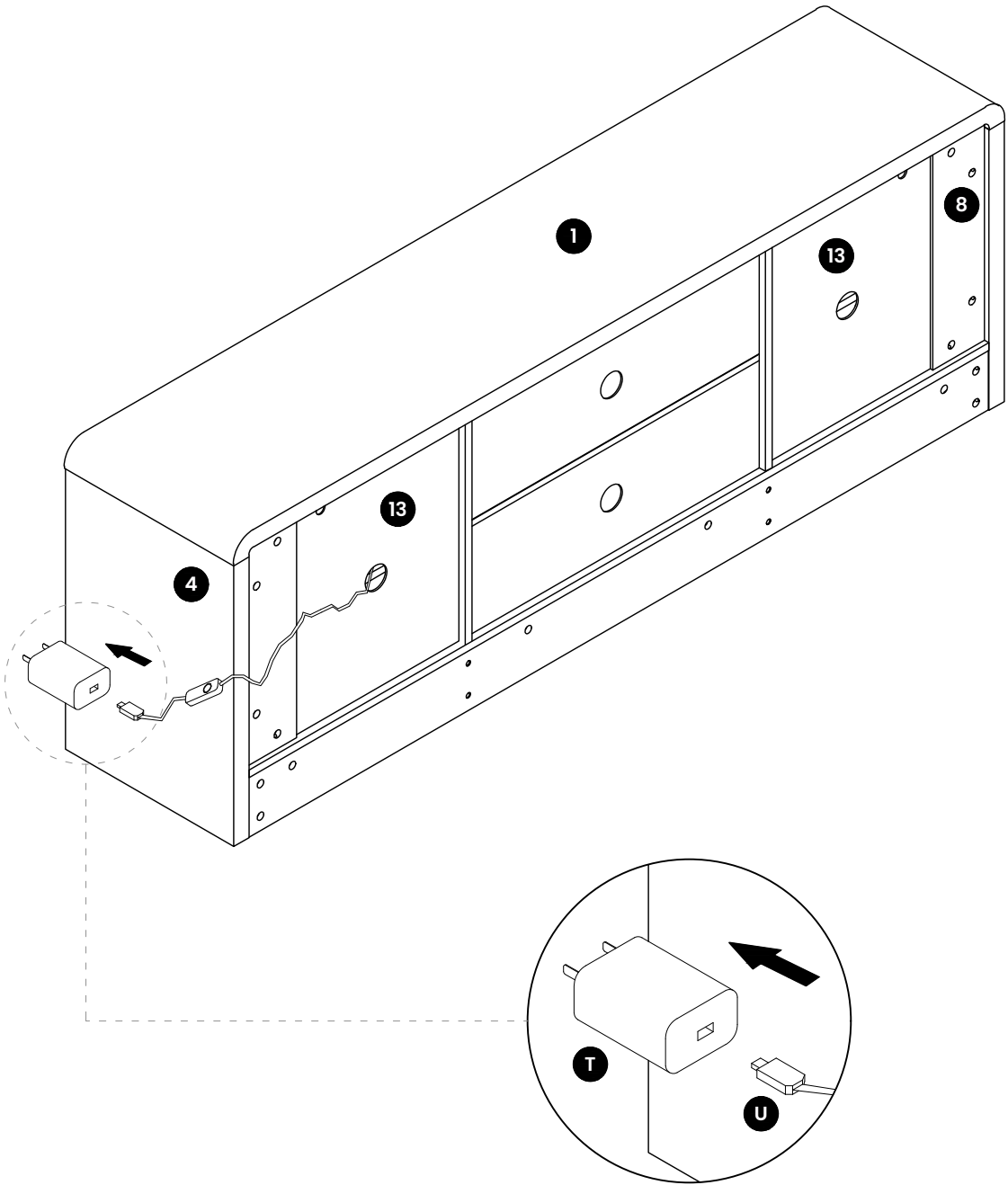

STEP 16

F X12

I X12

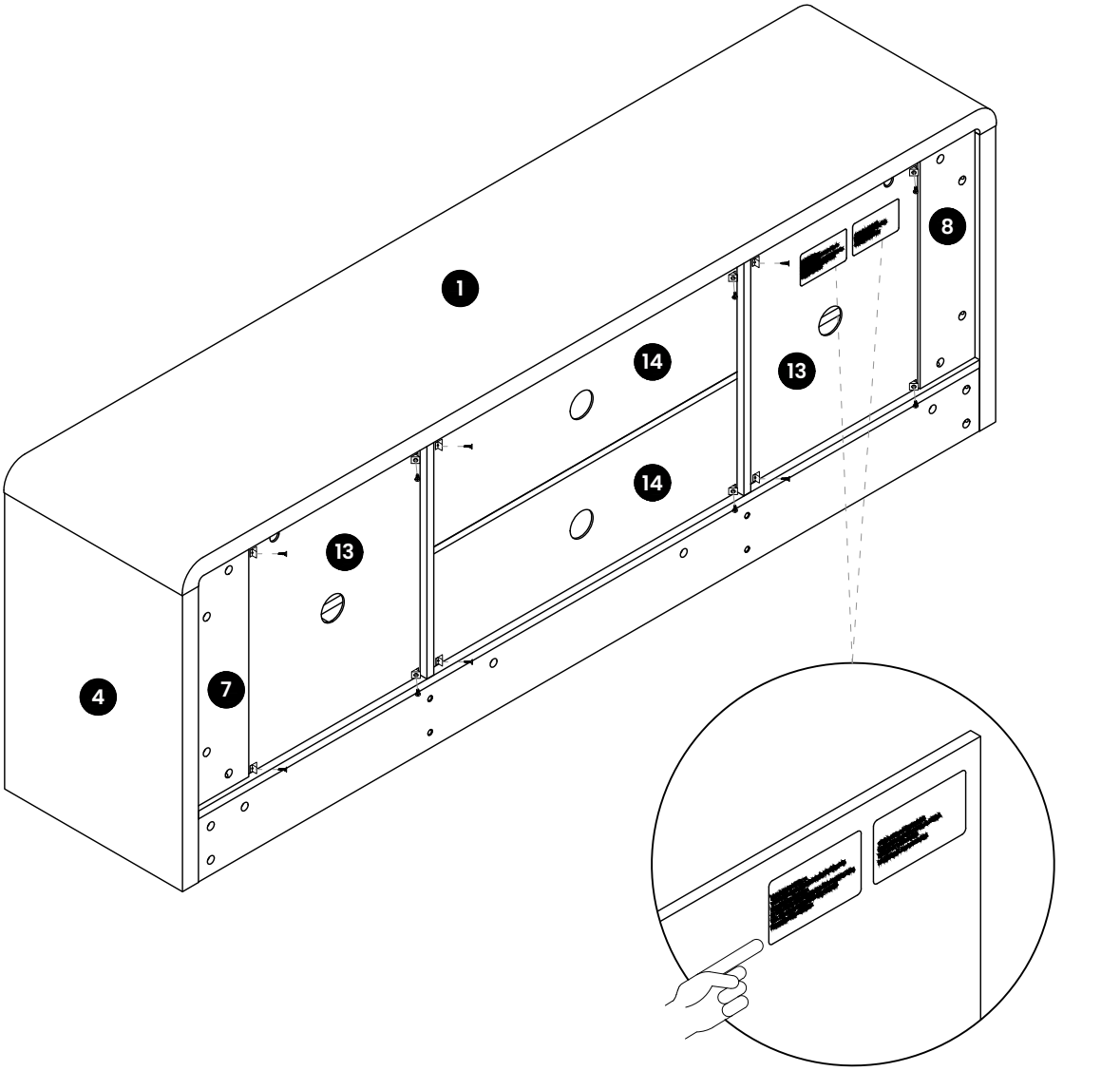

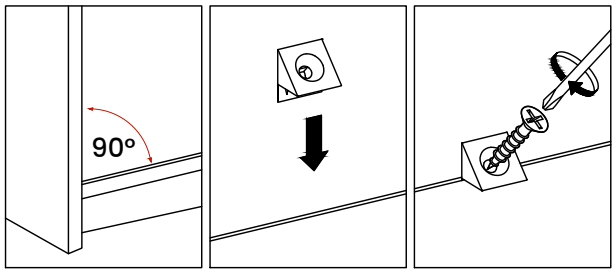

STEP 17



V X 40

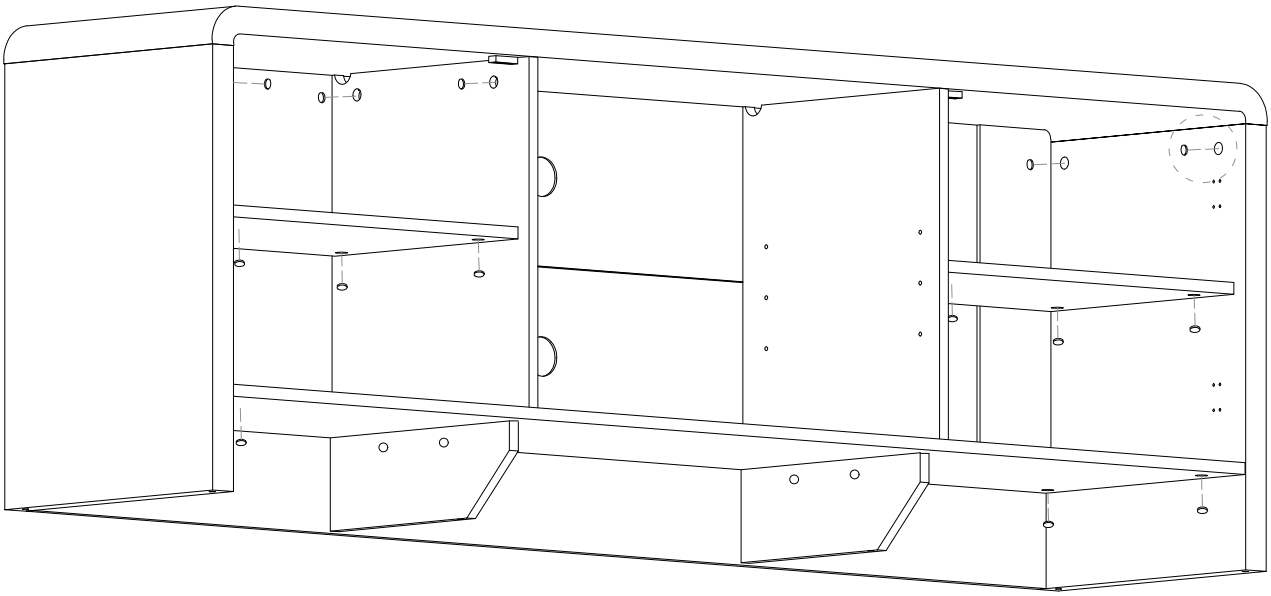

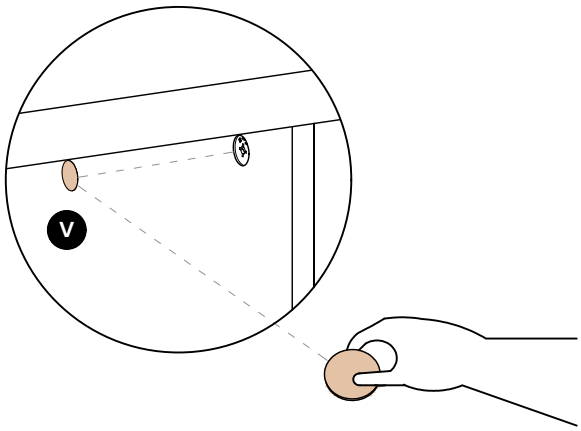

STEP 18



L X 4

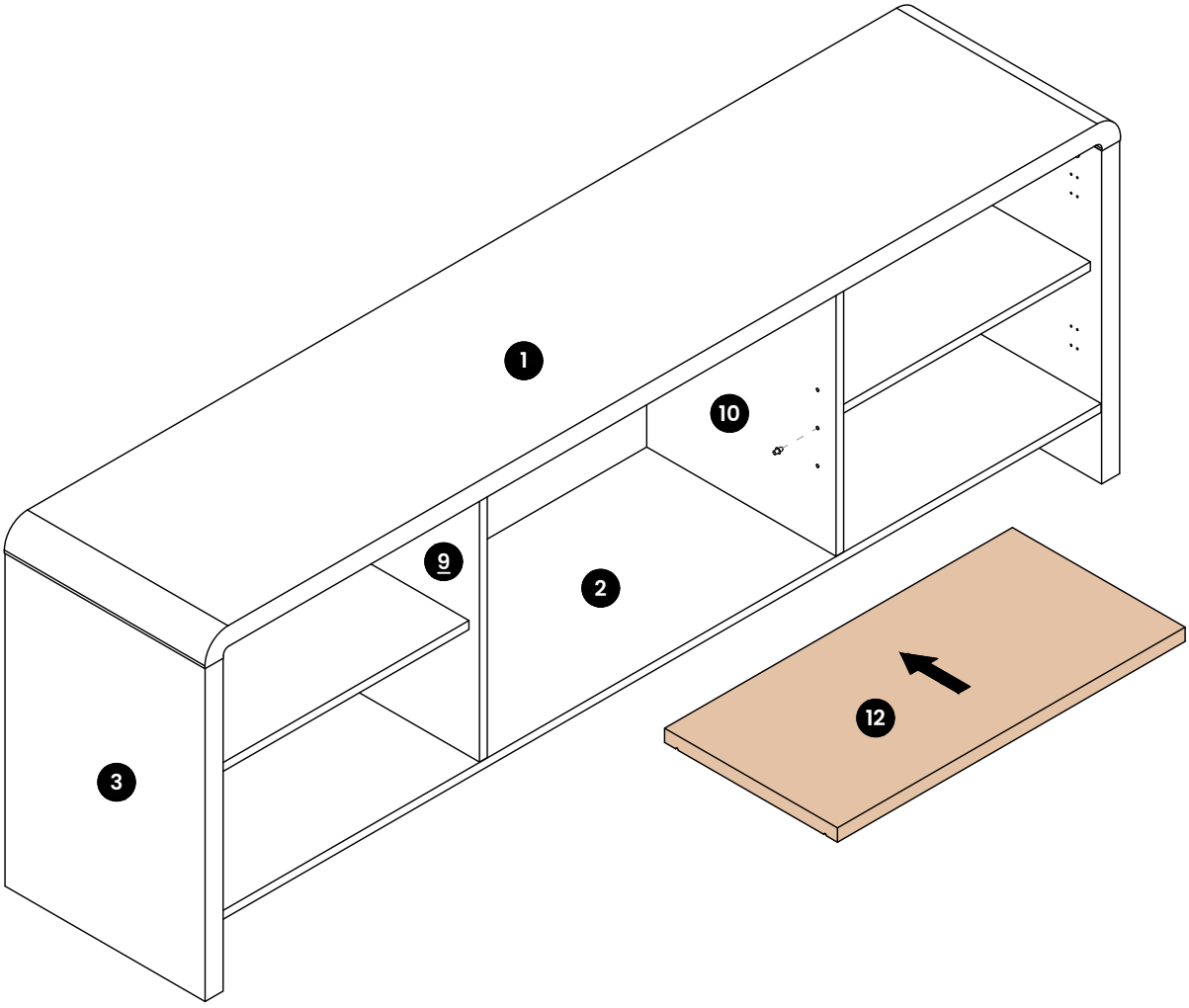

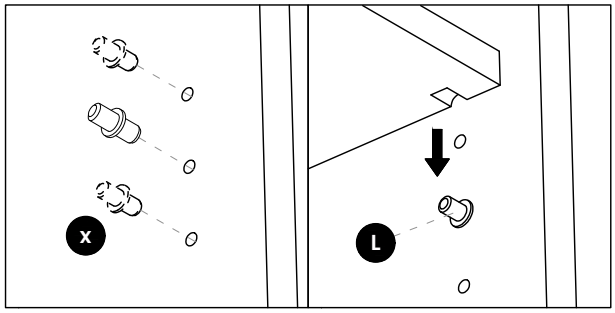

STEP 19

	F X8
	G X6
	H X4
	K X2

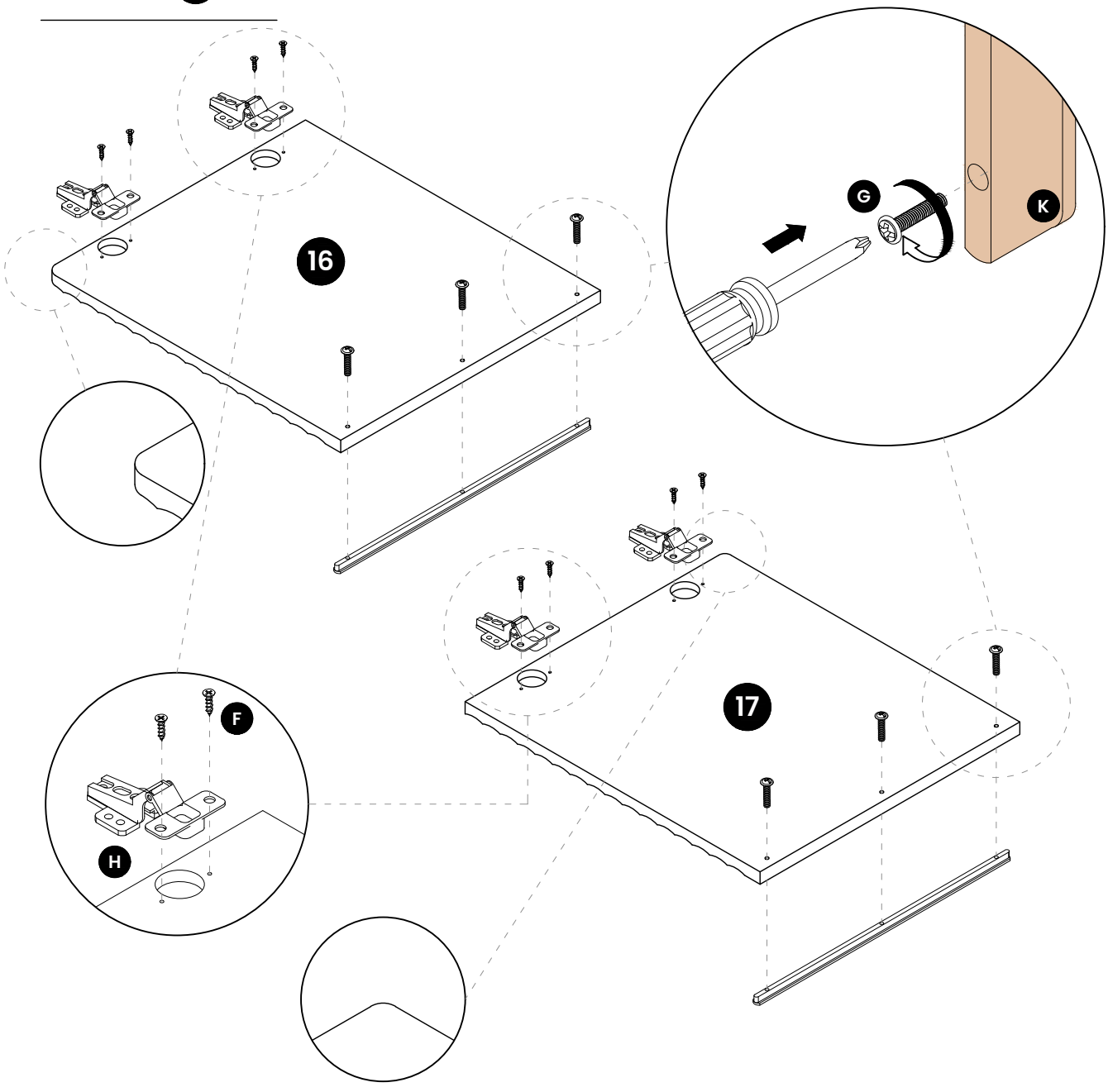

STEP 20

F X16

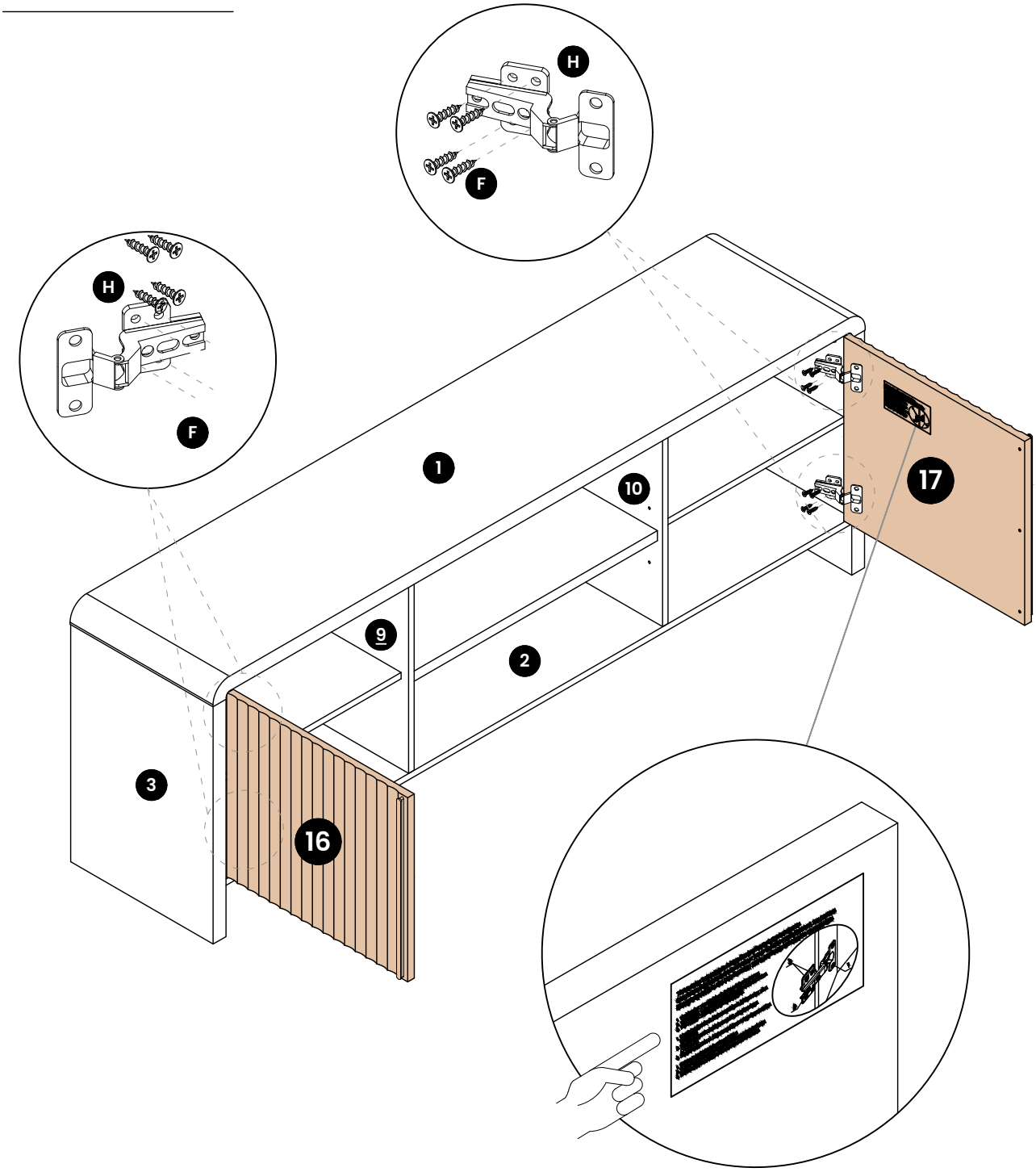

STEP 21

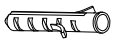

P X2



Q X2

Wall-Mounted Installation
Step 1: Identify the correct location for the anti-tipping device on the wall and make a clear mark.
Step 2: Drill a hole, then fix the expansion plug firmly in the wall.
Step 3: Use screws to attach the L-shaped angle bracket to the wall.

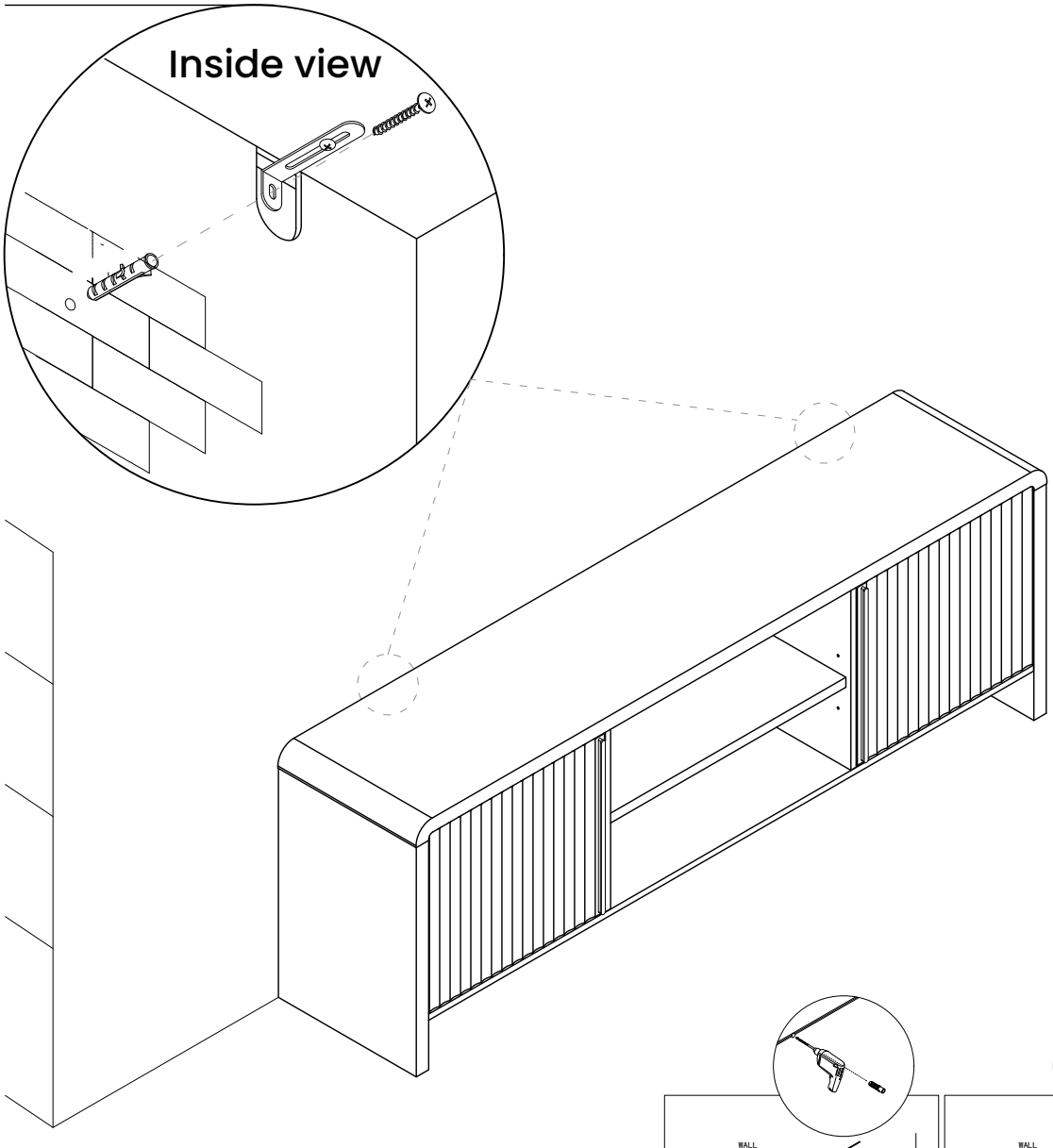

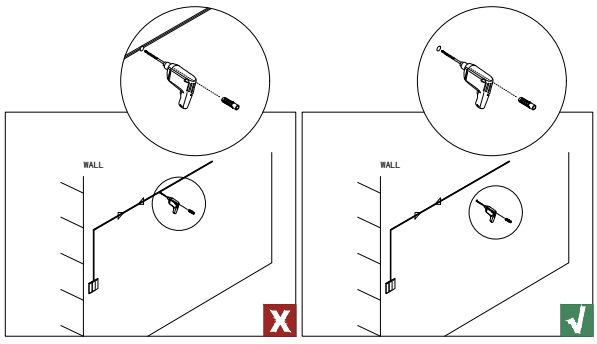

Check and avoid hidden pipelines before drilling walls.

The ways to adjust the door

- Before adjusting the hinge, please check whether the cabinet is skewed.
- If the skew can not be repaired, please remove the anti-tipping device first, thenadjust the cabinet to verticalposition.
- Please adjust the hinge with the door open.
- Please operate it with more than 2 people, one person holds the door and the other one adjusts the screw.

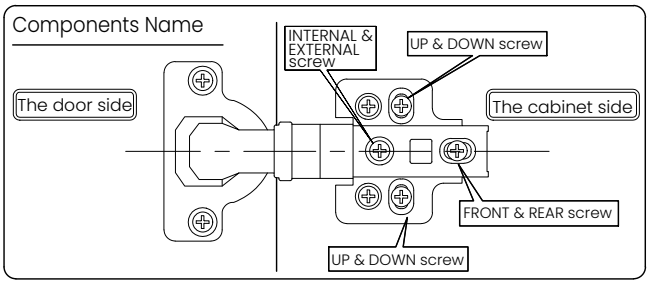

When door is crooked

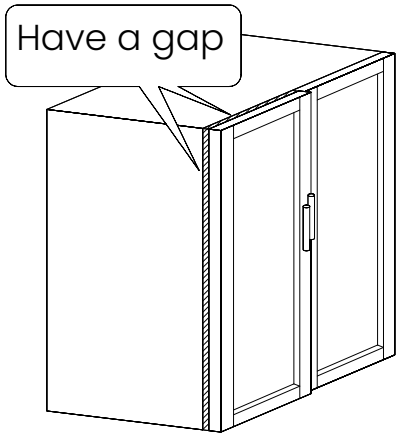

Please take the following steps to adjust first.

1 Rotate the "front and rear screws" to the left

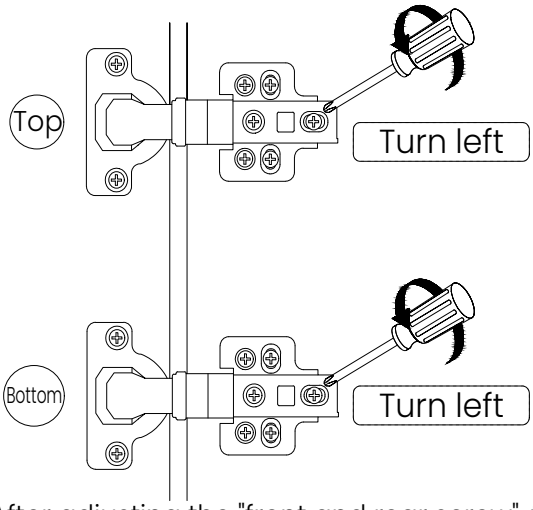

※ After adjusting the "front and rear screw", the door still does not change, please turn the "internal & external screw" to the right Slightly.

2 Push the door to the cabinet

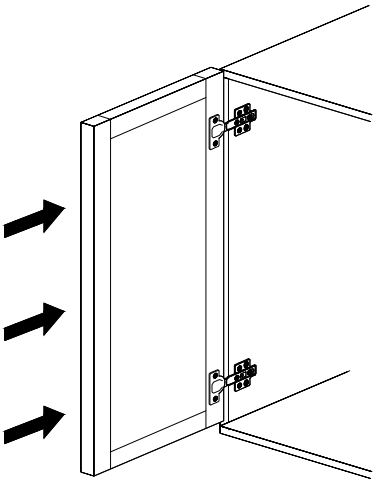

3 Rotate the "front and rear screws" to the right

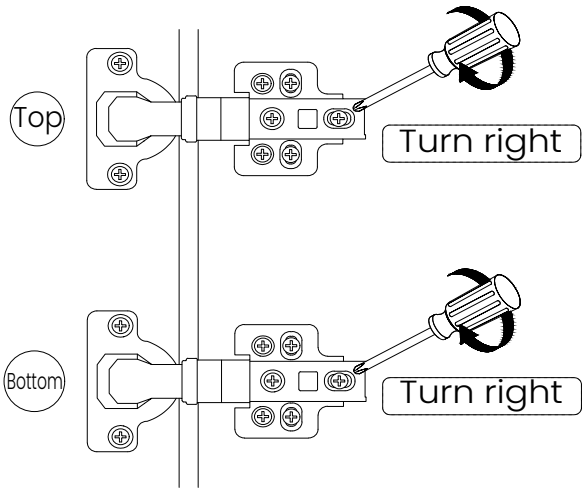

When 2 doors are not tight

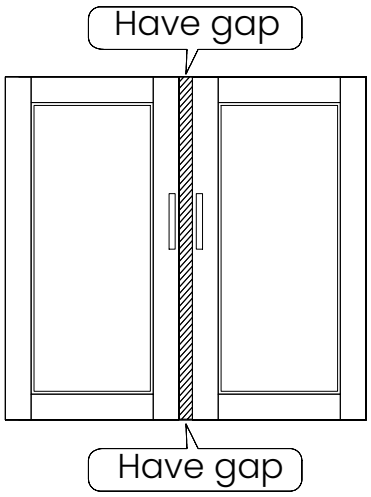

* If the 2 doors are overlap, please turn the "internal & external screw" to the left.

1 Turn "internal & external screw" to the right can make the door approach inside. Please adjust the doors little by little.

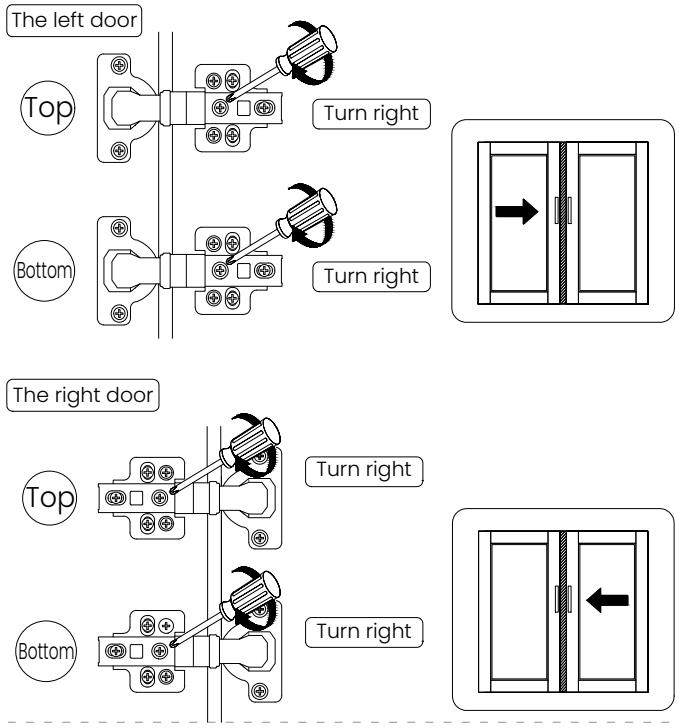

when door is leaning

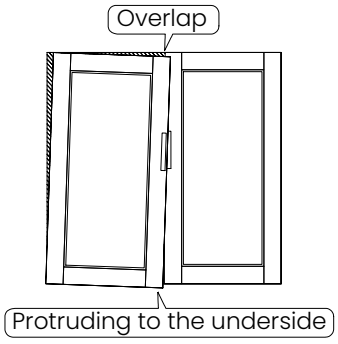

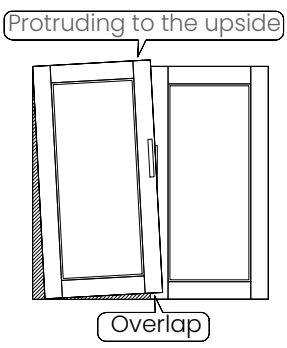

1 Turn"internal & external screw" to the left can make the top of the door tilted outward.

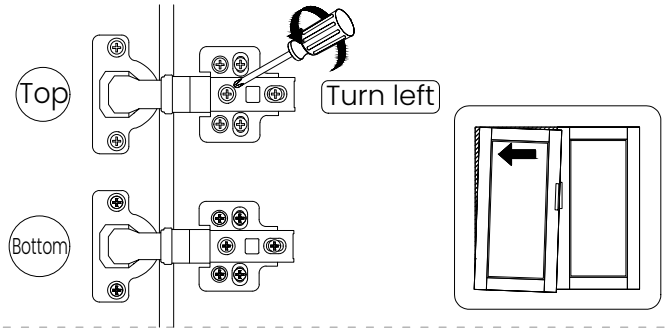

1 Turn"internal & external screw" to the left can make the bottom of the door tilted outward.

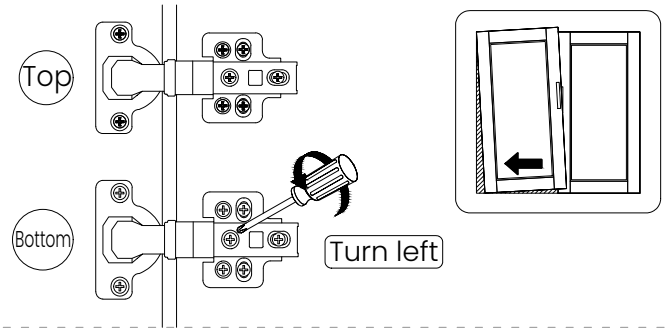

When door is higher on top

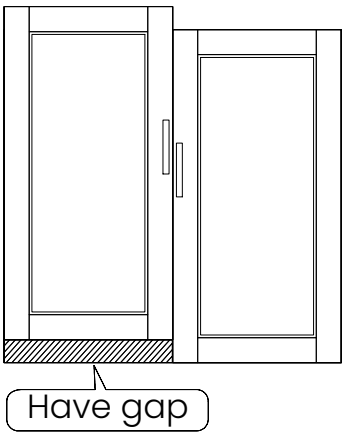

1 Turn "up & down screw" to the left.

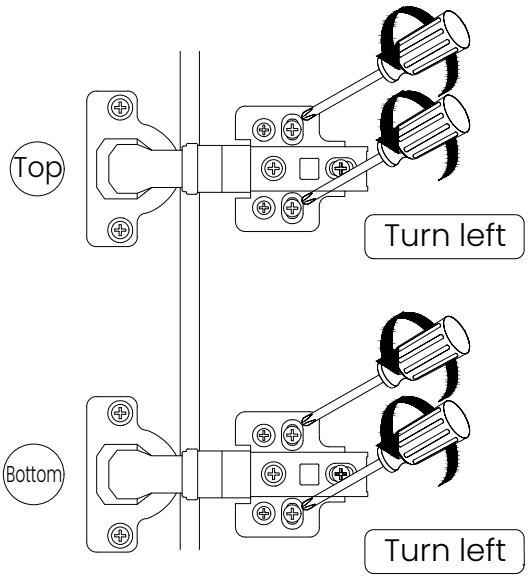

2 Lower the door's height so that 2 doors are of the same height.

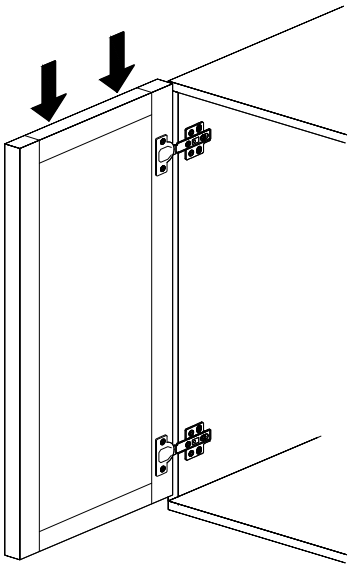

3 Turn"up & down screw"to the right.

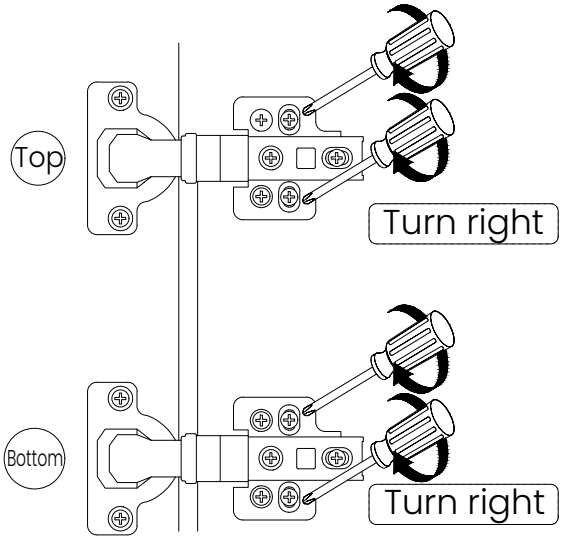

※If the door is lower on bottom, please lift up the left door slightly on step 2

ModernMate

After-Sales Service Hotline：(800) 661-5928
Suppor Hours : Mon-Fri, 9:00 am-5:00 pm PST/PDT