OPERATIONS MANUAL

MADE IN CHINA

Assembly & Installation Instructions

Warning: If any special control devices are used with this fixture, follow the instructions carefully to assure full compliance with N.E.C. requirements. If there are any questions, contact a qualified electric contractor.

Warning: California Residents Proposition 65 This product contains lead, a chemical known to the state of California to cause cancer and birth defects or other reproductive harm. Do not place the product in your mouth. Wash your hands after handling this product.

Caution: It is highly recommended to get an electrician to install this light. Please make sure to turn the electricity off at the main circuit breaker before beginning installation. All glass is fragile. Use care when handling glass component(s) and/or lamp(s)

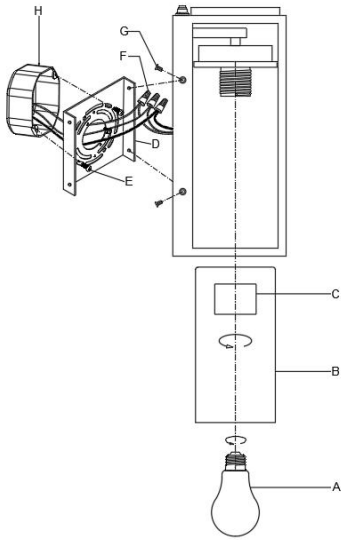

Drawin g 1

After securing fixture to the wall it is recommended that the gap between the wall and the fixture backplate be sealed on the top and both sides, with a good quality waterproof caulk or silicone sealant (NOT INCLUDED)-see Drawing 1.

WIRE CONNECTION DIAGRAM

Wires meeting safety standards are required to connect the electical circuit

CAUTION: Risk of fire

Please read all instructions carefully. Before you proceed to install,vmake sure that the power supply is turned off and remains off until installation is completed.

PARTS INCLUDED

Code	Part description	QTY
A	Light bulb	0
B	Glass	1
C	Lamp ring	1
D	Mounting bracket	1
E	Box screws	2
F	Wire caps	3
G	Mounting screws	4
H	Junction box	0