Instruction Manual
(Full vertical)

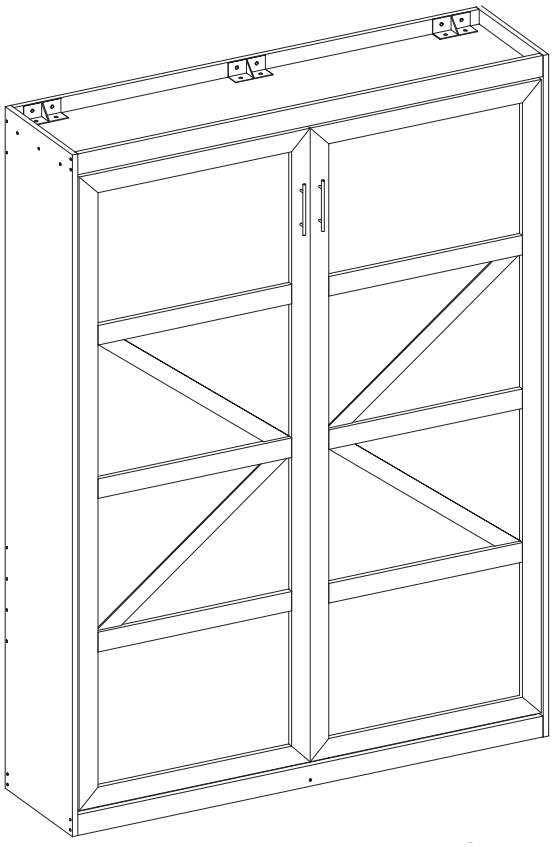

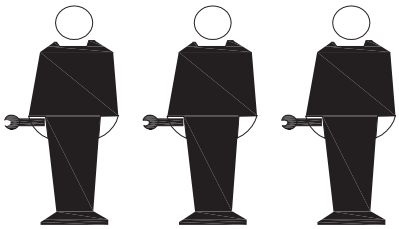

THANK YOU FOR PURCHASING OUR PRODUCT

Note:Be sure to check all packing material carefully for small parts which may have come loose inside the carton during shipment.Separate, identify and count all parts and metal hardware.Compare with all parts list to be sure all parts are present.if any part(s) are missing or damaged, please contact us,and tell us your "ORDER ID" ,we will solve the issue for you as soon as possible.For efficient and speedy service, please indicate the model number and code letter of part(s) needed.Do not fully tighten screws until fully assembled.

⚠ Warning

This bed contains stored mechanical energy,which can cause serious injury if improperlyhandled.Your bed must be securely anchored to the wall!
Before assembly and disassembly.

General Assembly Guidelines

I. Ensure that all parts and hardware are available before beginning assembly.

II. Follow each step carefully to ensure the proper assembly of this product.

III. Three people are recommended for ease in the assembly of this product.

IV. The three main types of hardware used to assemble this product are: wood dowels, screws and bolts.

V. A Phillips head screwdriver is required for the assembly of this product.

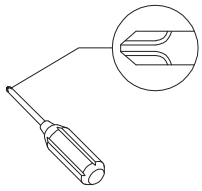

VI. Cam bolt and Cam lock Assembly instruction.

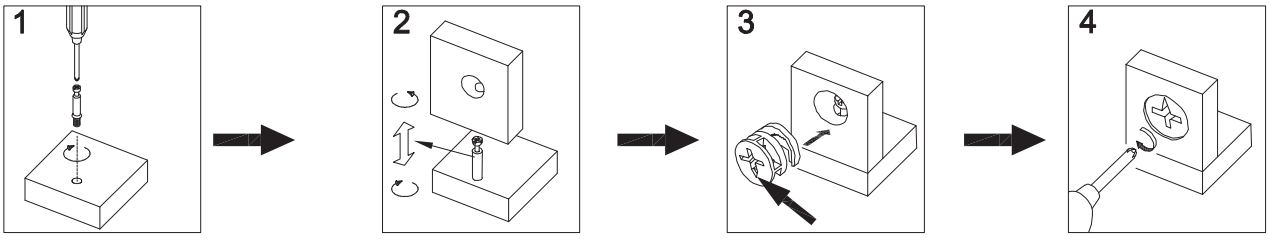

Cam bolt
vertical installation.

Cam bolt is
adjustable

Cam lock
the arrow is towards
the Cam bolt

180°
Ensure locking

VII. Minimum three people are required to install it.

Note:
Before using the Murphy bed, be sure to fix the bed on the wall, and test it more than 10 times to make sure it can be opened and closed normally after it is safe and stable, then start daily sleep, if there is any problem, please make any necessary adjustments.

COMPONENT PARTS

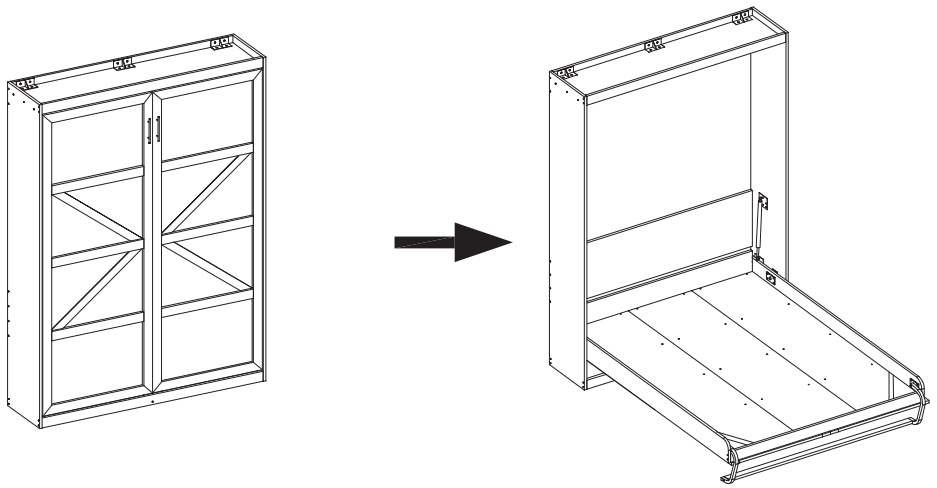

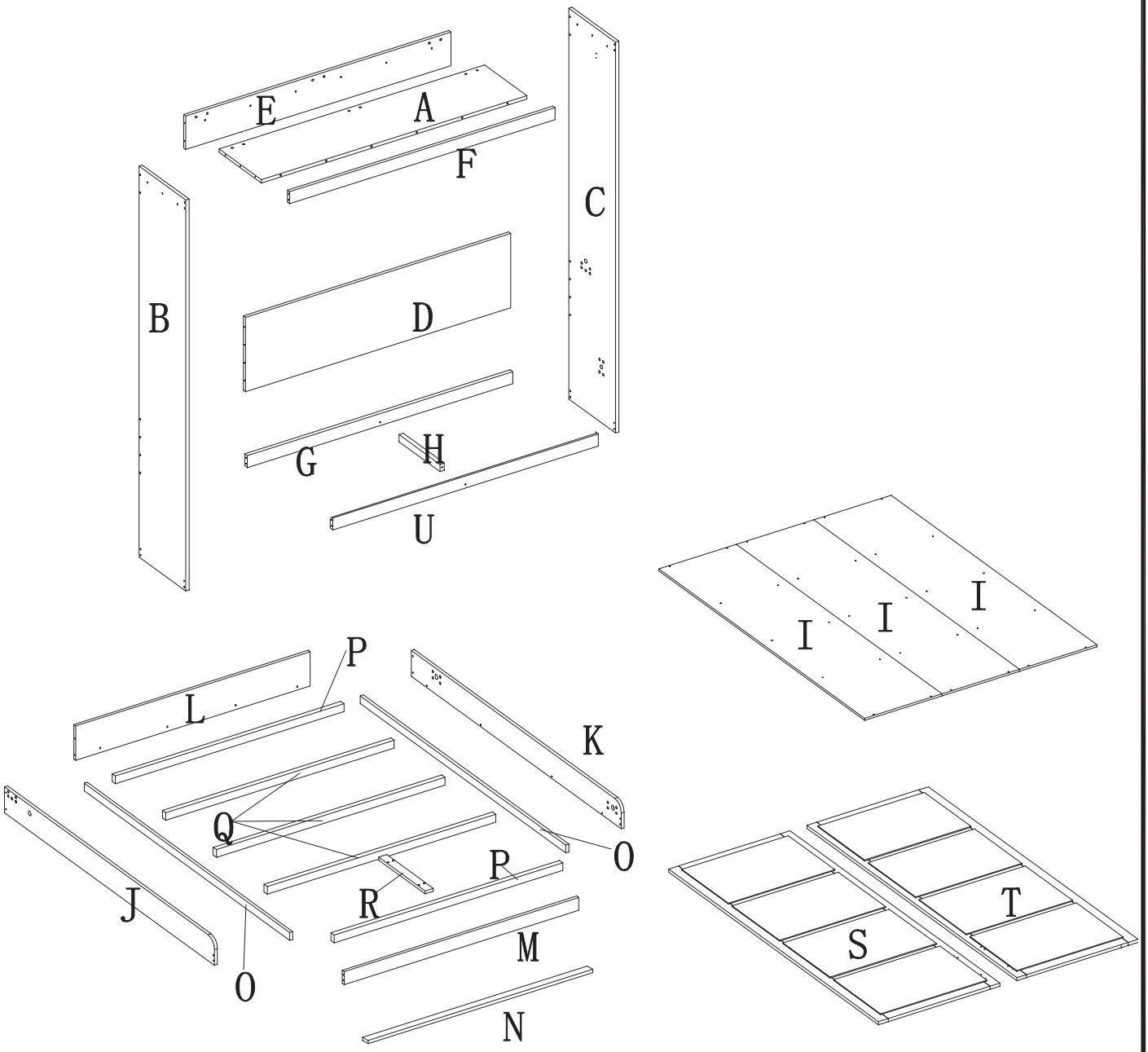

Please verify that you have received all components by checking the contents of your box.

Only the screws used to assemble the accessories are provided, not the screws used to assemble the bed.

1 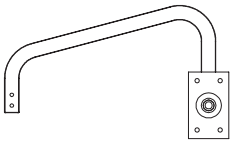 2 Pcs Metal Pivoting Legs	8 4 Pcs Leg Support Rail Screws
2 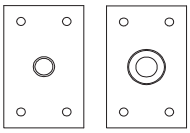 2 Pcs Metal Pivot	9 16 Pcs Bolt
3 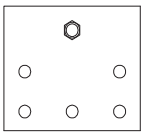 2 Pcs Upper Ball Stud Plates	10 20 Pcs Bolt
4 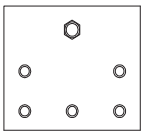 2 Pcs Lower Ball Stud Plates	11 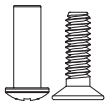 8 Pcs "T" Nuts With Machine Screws
5 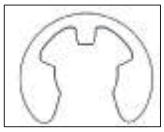 2 Pcs "E" Clips	12 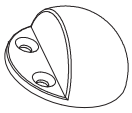 2 Pcs Bed Stops With
6 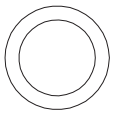 2 Pcs Plastic Spacers	13 2 Pcs Elastic Mattress Retaining Straps
7 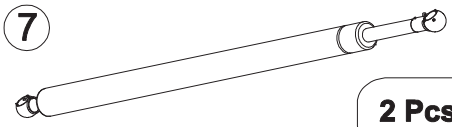 2 Pcs Gas Springs	

15		Ø8x30mm	Wooden dowel	12	pcs
16		Ø6x35mm	Cam bolt	4	pcs
17		Ø15x12mm	Cam lock	4	pcs
18		Ø6x50mm	Screw	44	pcs
19		4mm	Allen Key	2	pcs
20		Ø4x22mm	Screw	4	pcs
21		5mm	Allen Key	1	pcs
22		M4x35mm	Screw	20	pcs
23			Sticker	32	pcs
24			Handle	2	pcs
25		M6x13mm	Washer	16	pcs
26		M4x25mm	Screw	34	pcs
27		M4x16mm	Screw	4	pcs
28		M4x45mm	Screw	42	pcs
29				3	pcs
30		M8x16mm	Bolt	6	pcs
31		M8x18mm	Washer	6	pcs
32		M8mm		6	pcs
33		M6x15mm	Bolt	16	pcs

Tools required for assemblyr (not included)

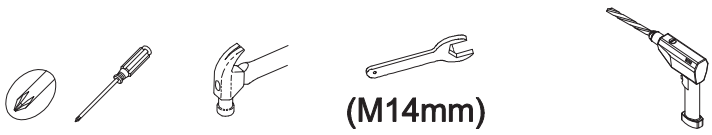

The hardware quantities listed above are required for proper assembly.
Some extra hardware may also have been included.

Step 1

Countersunk hole facing upwards

The countersunk hole is inside

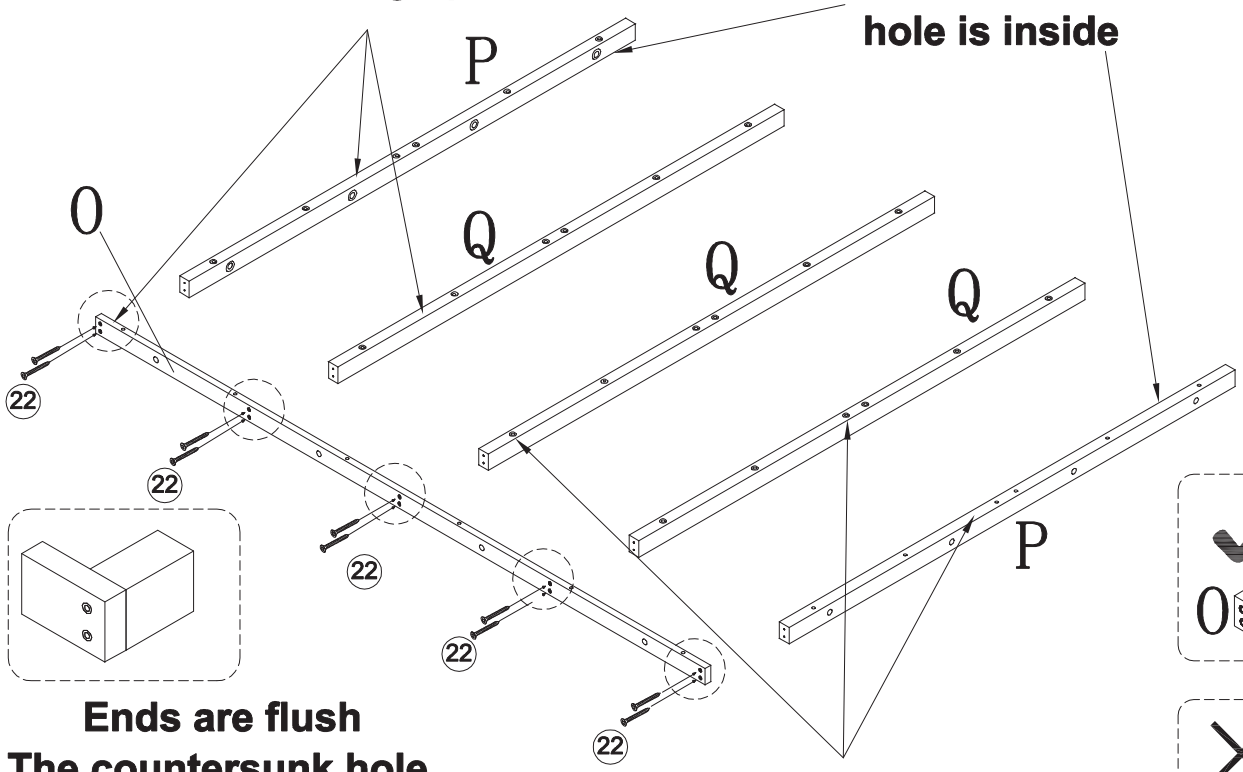

Ends are flush
The countersunk hole is outside

Countersunk hole facing upwards

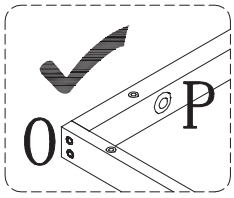

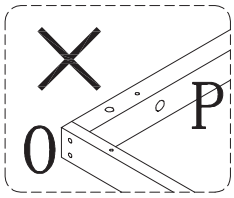

Step 2

Countersunk hole facing upwards

Countersunk hole facing upwards

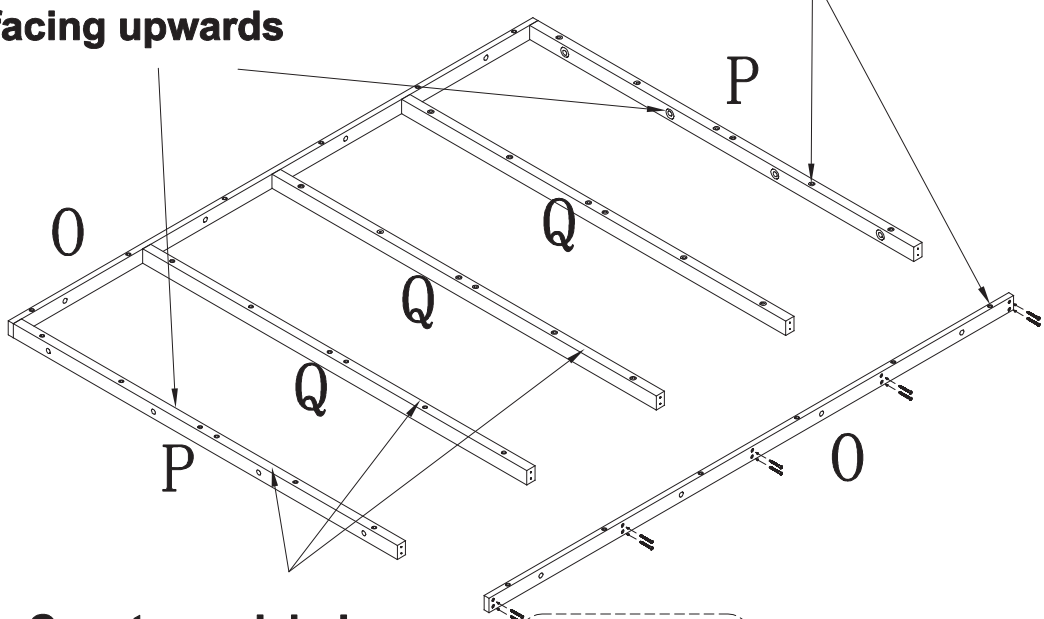

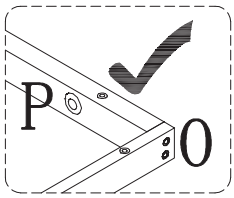

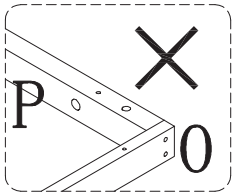

Countersunk hole facing upwards

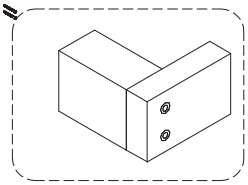

Ends are flush
The countersunk hole is outside

Step 3

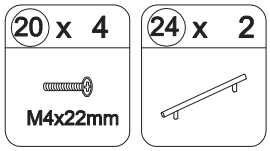

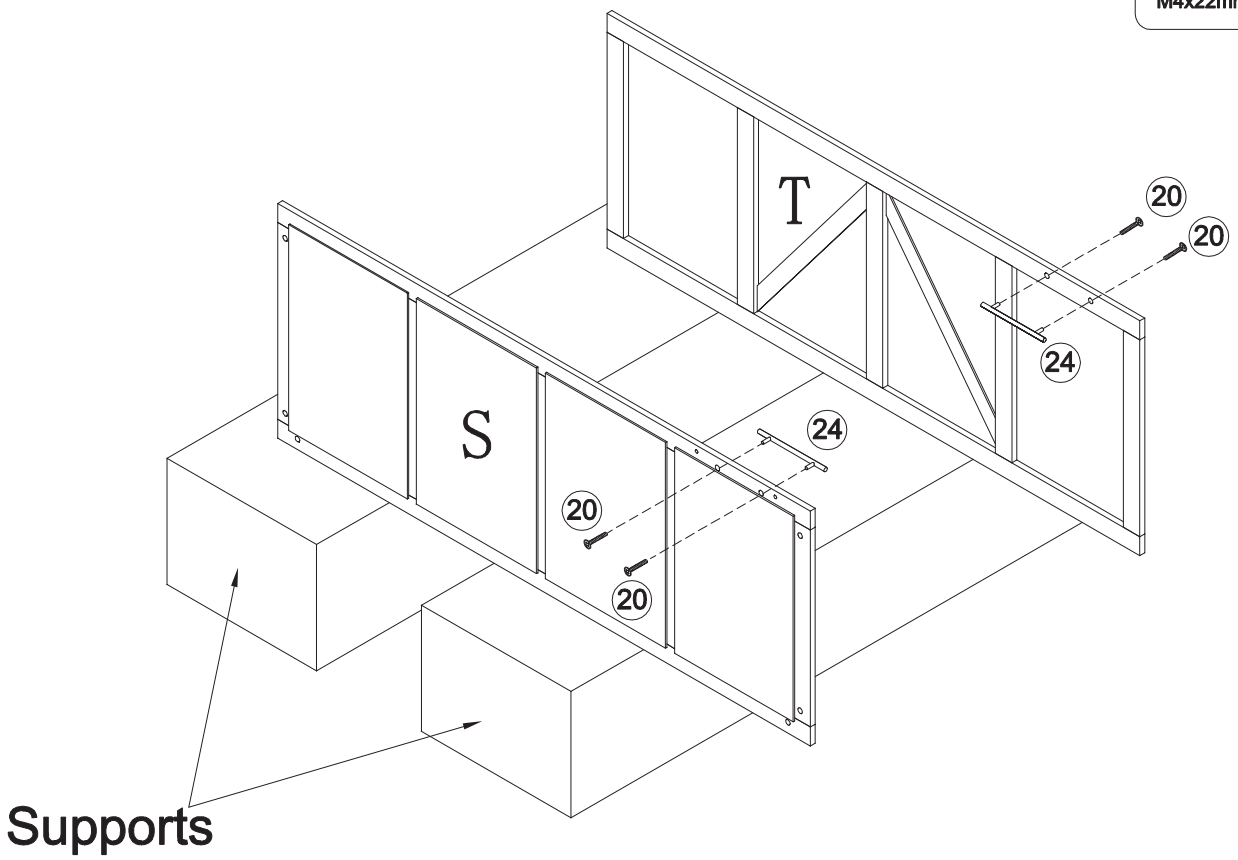

Step 4

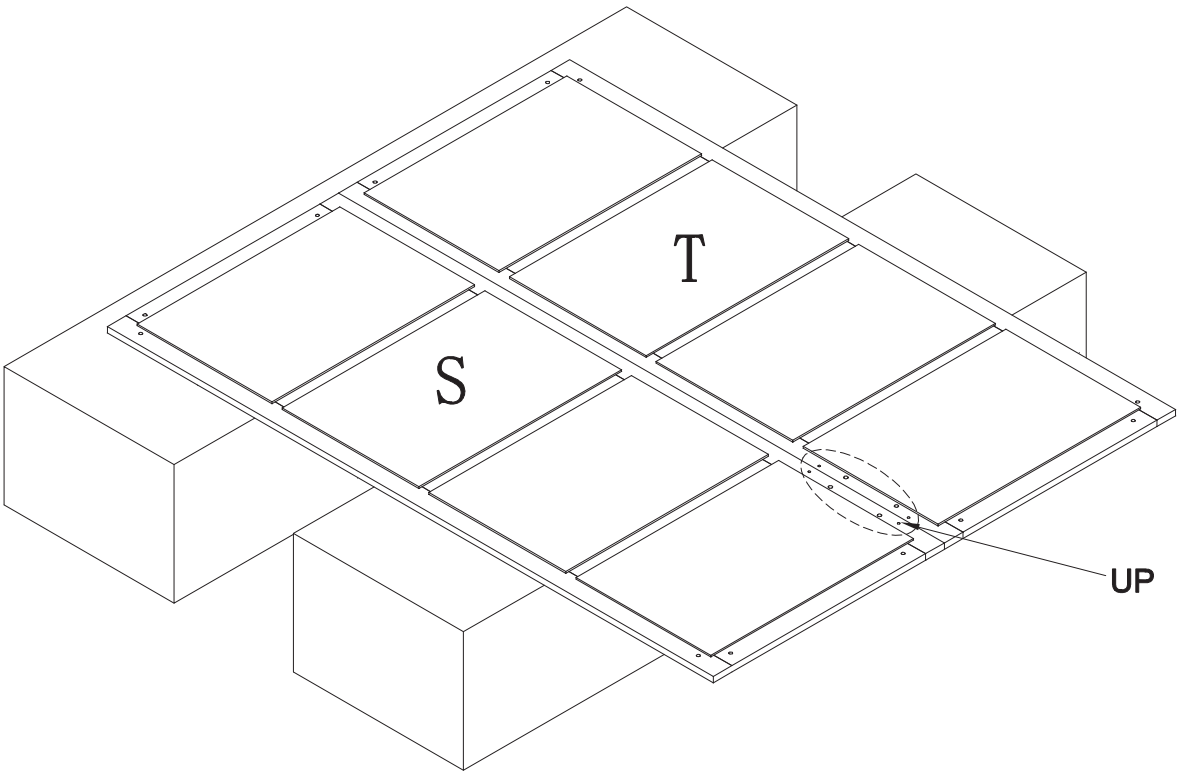

Step 5

15 x 8

Ø8x30mm

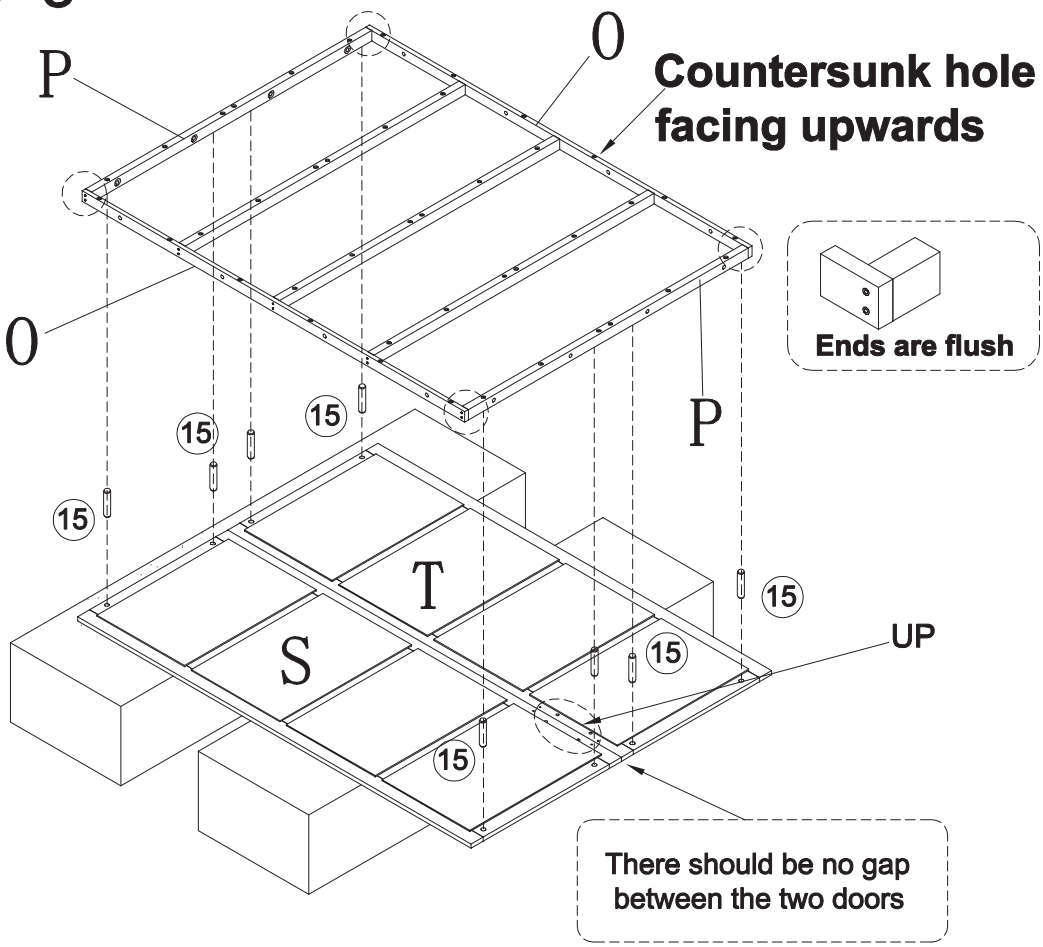

Step 6

28 x 42

M4x45mm

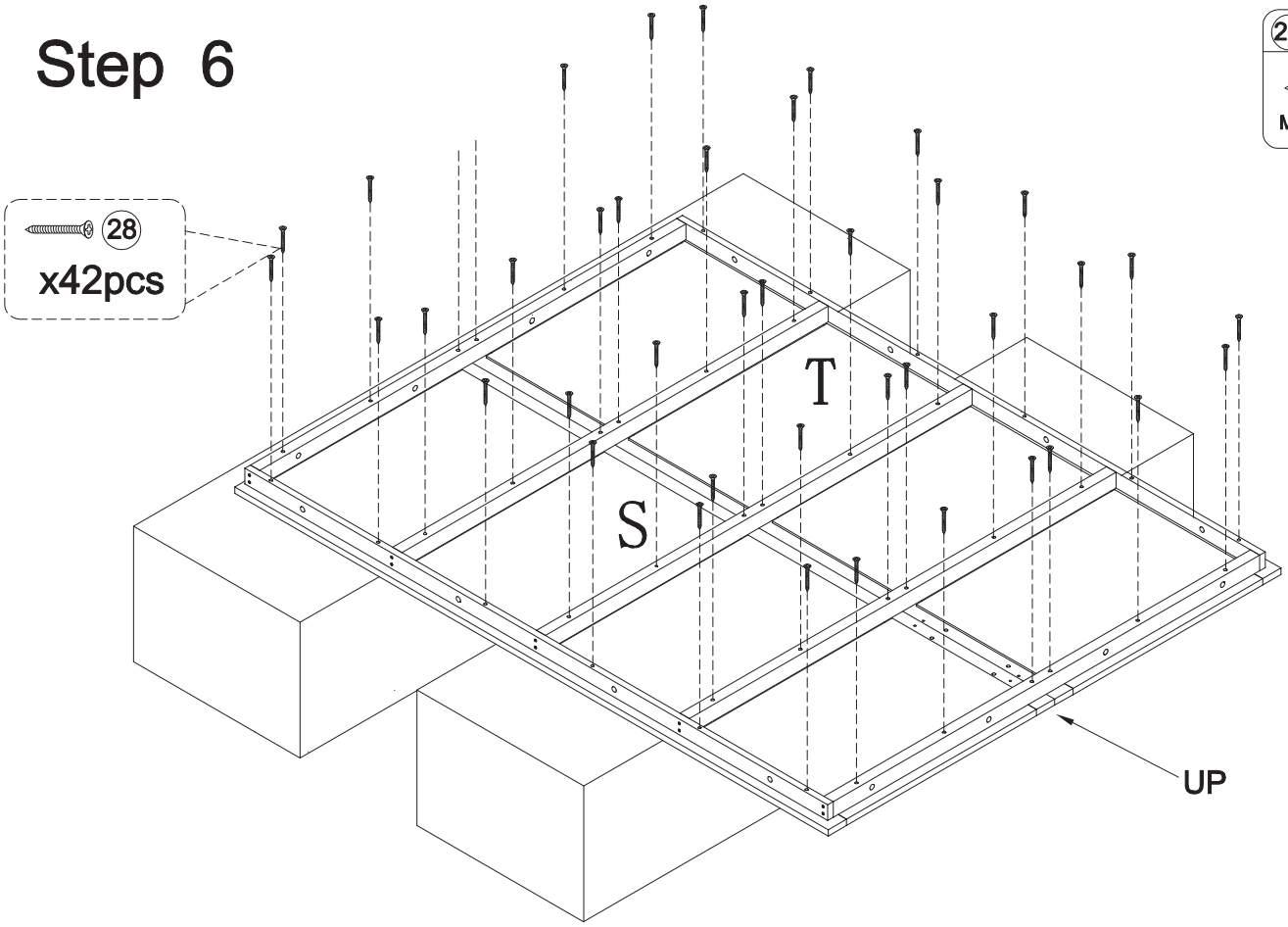

Step 7

26 x 4
M4x25mm

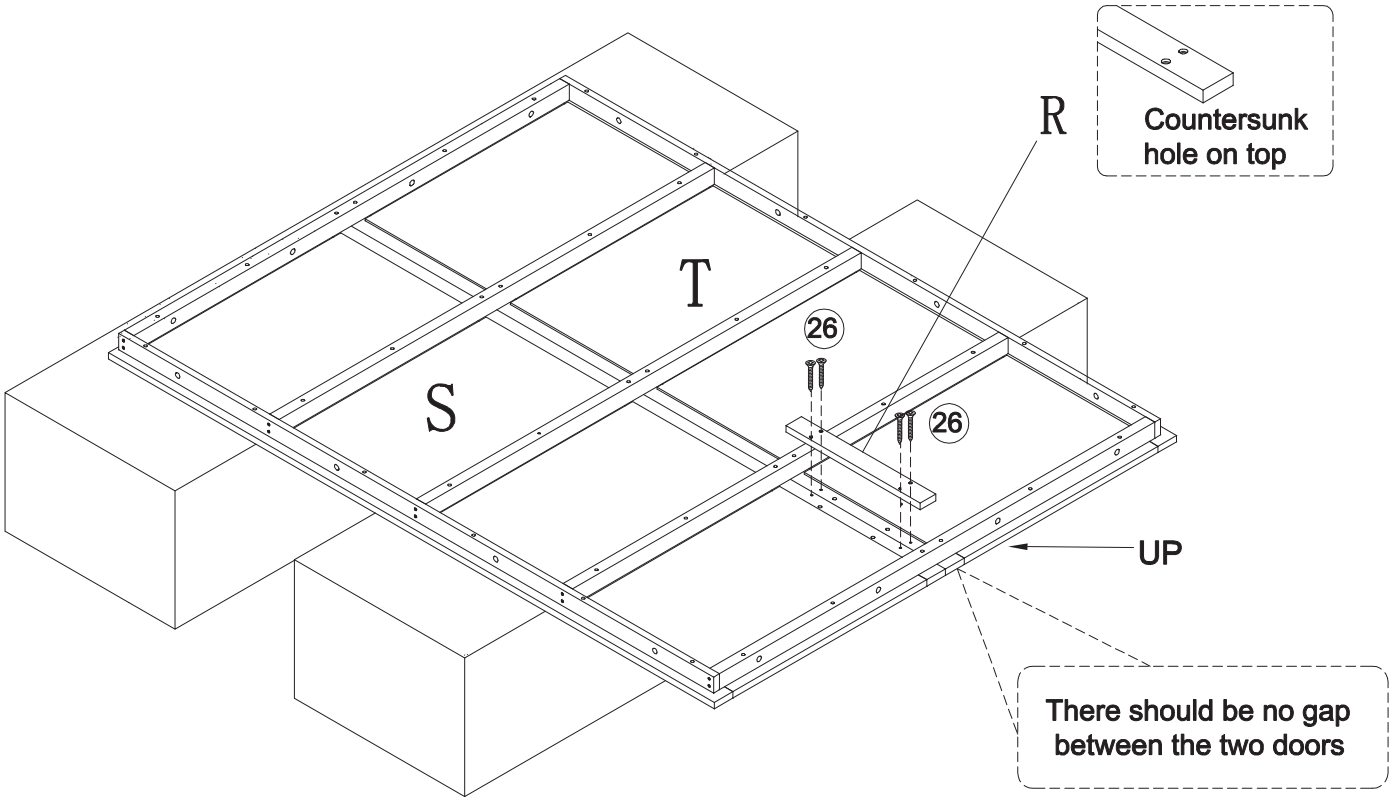
R
Countersunk hole on top
T
S
26
26
UP
There should be no gap between the two doors

Step 8

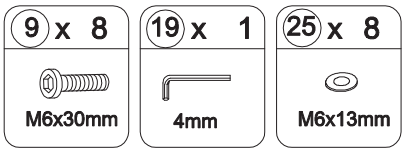
9 x 8
M6x30mm
19 x 1
4mm
25 x 8
M6x13mm

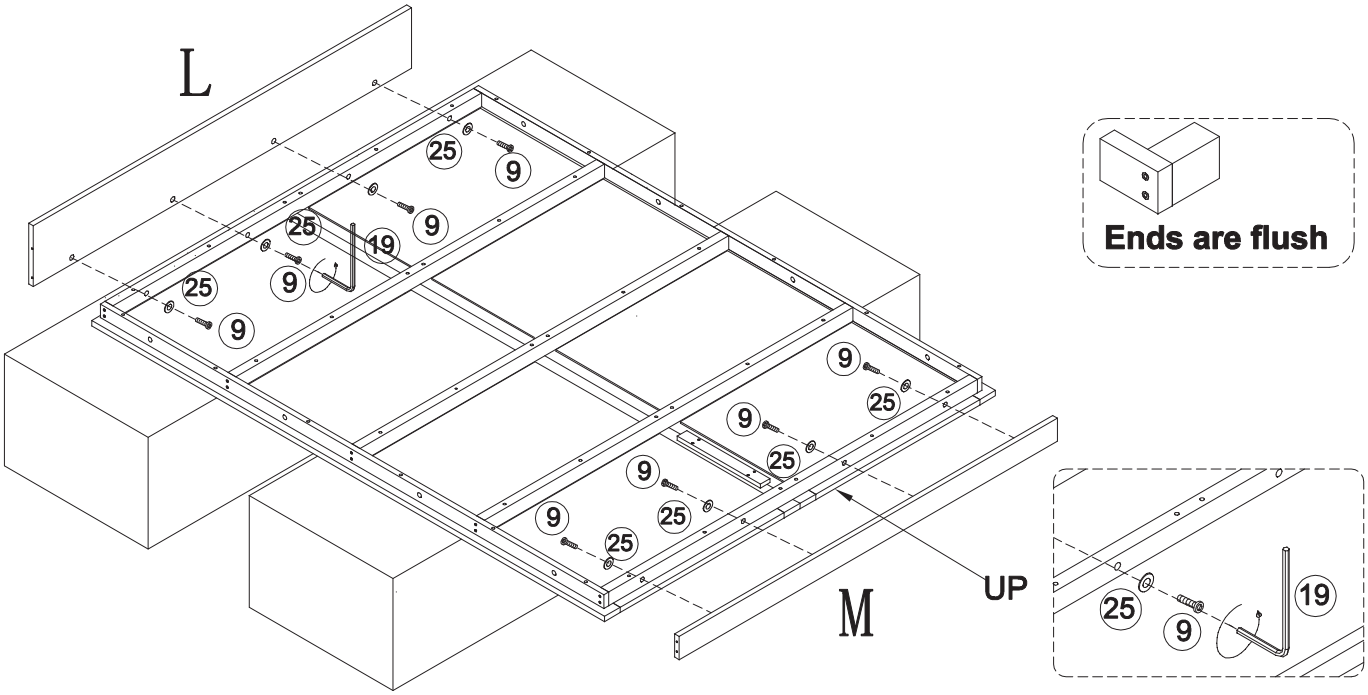
L
25
9
25
9
19
25
9
9
9
25
9
25
9
25
9
25
UP
M
Ends are flush
25
9
19

Step 9

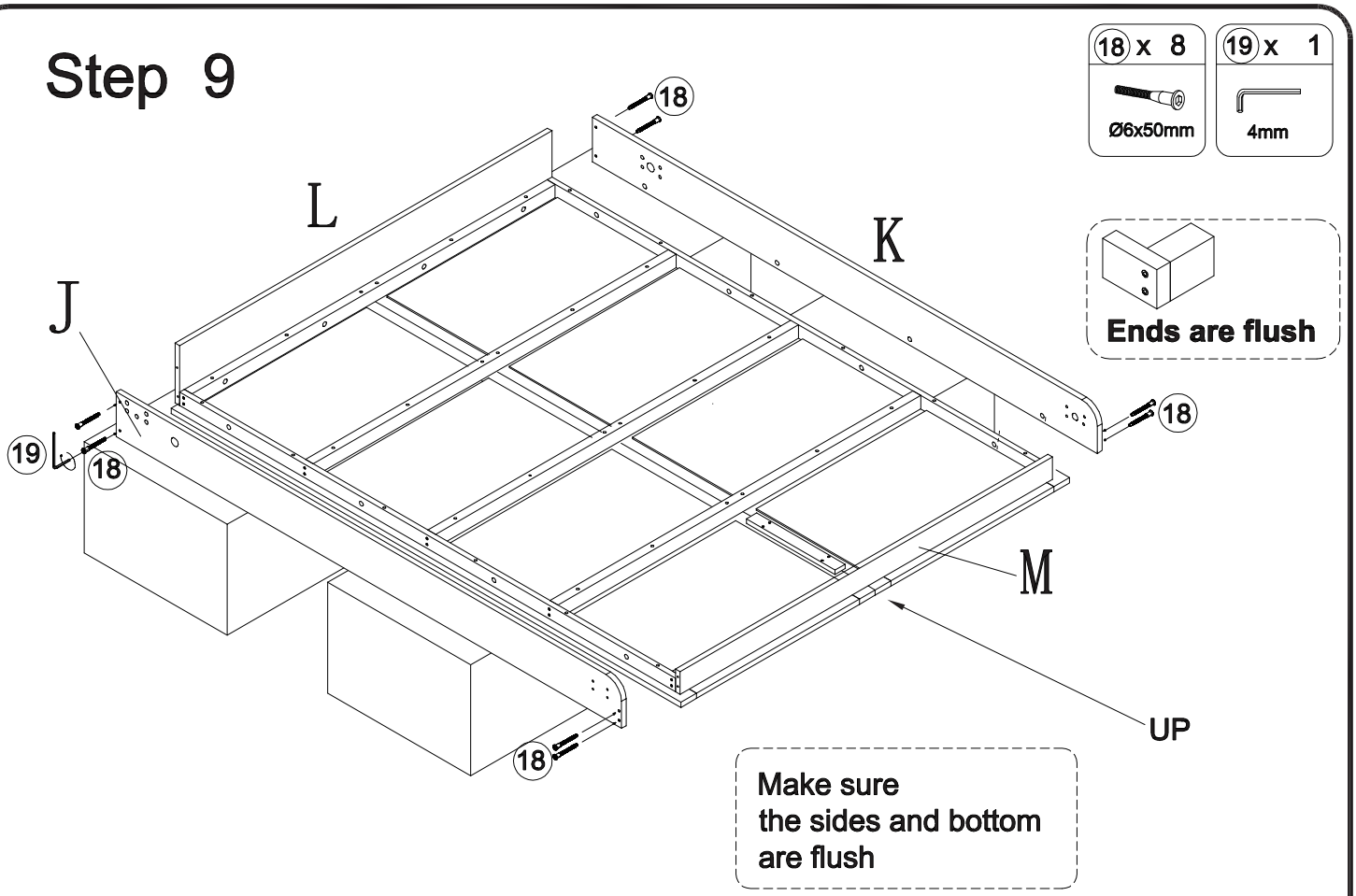

Step 10

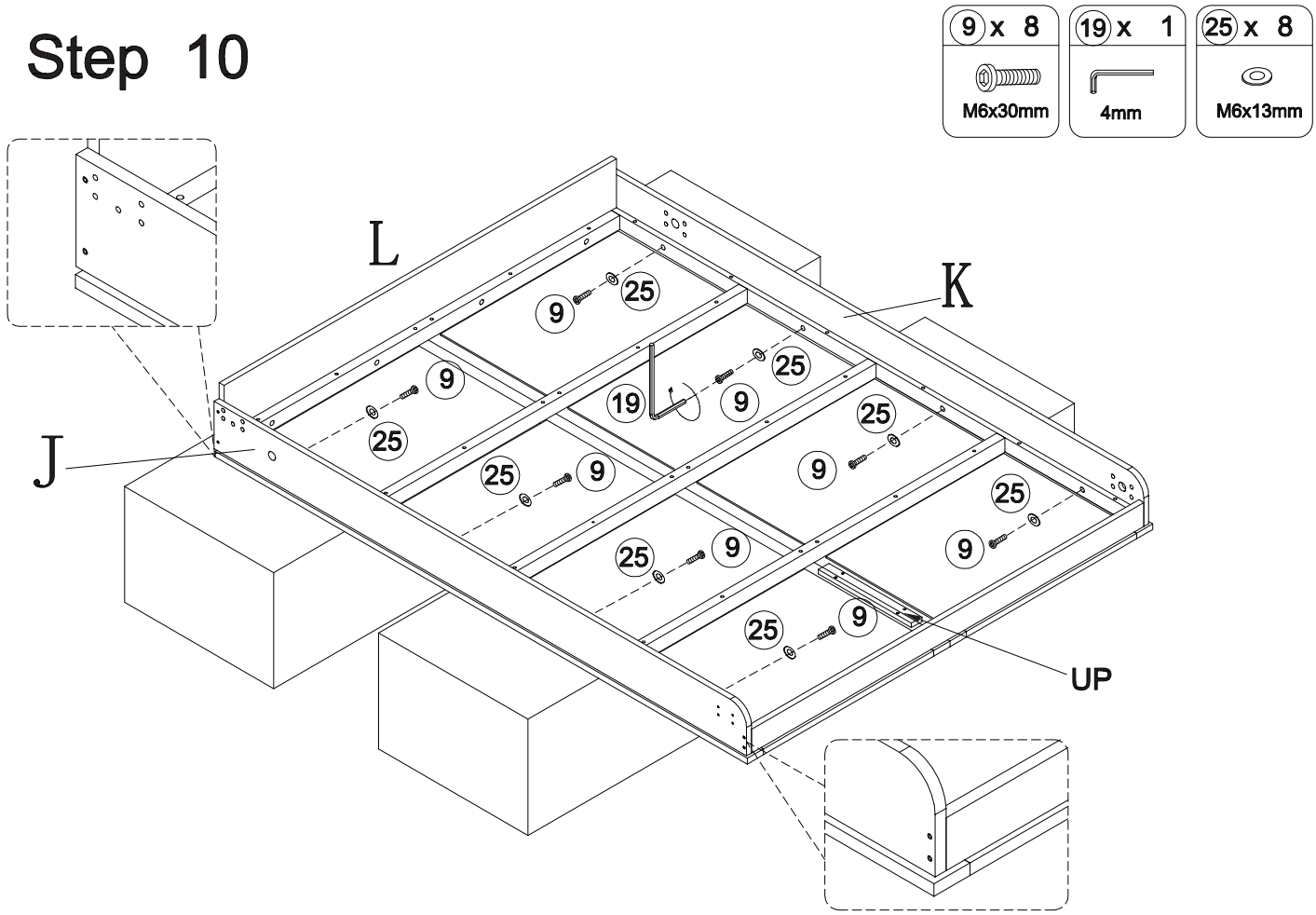

Step 11

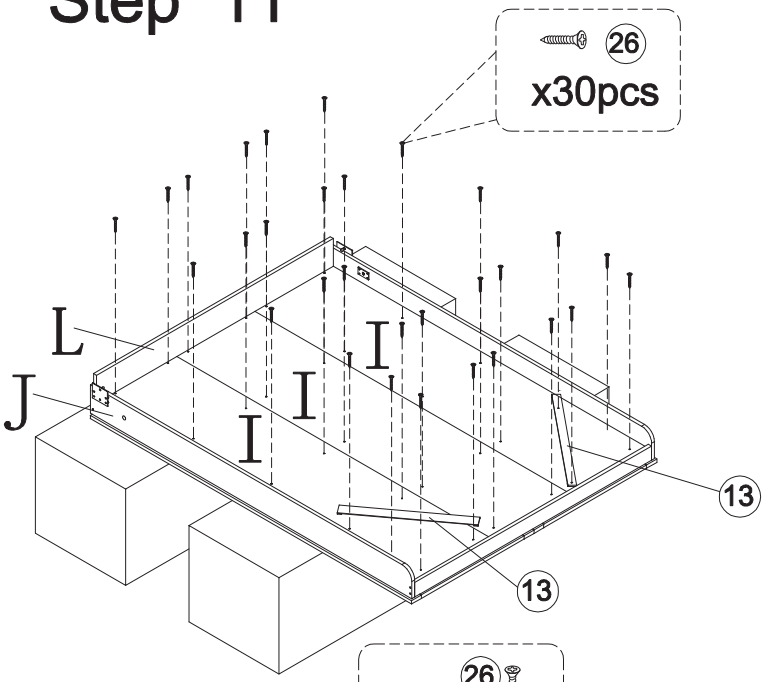

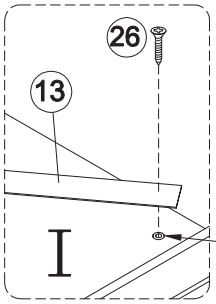

Countersunk hole facing upwards

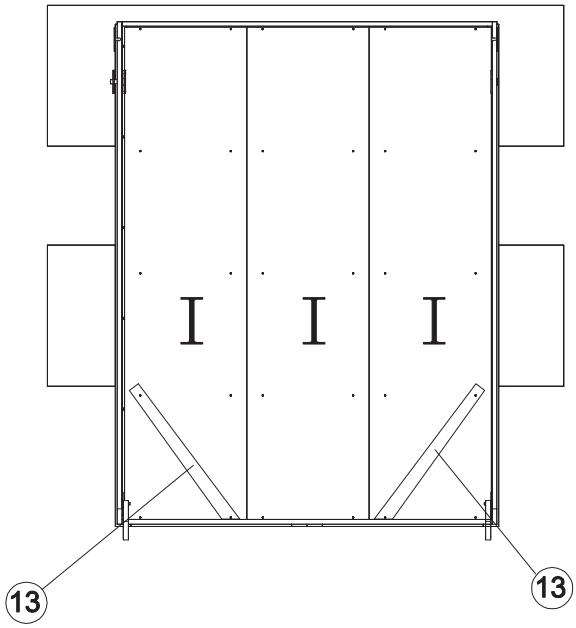

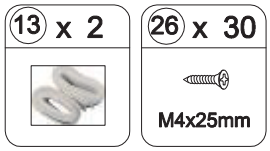

Step 12

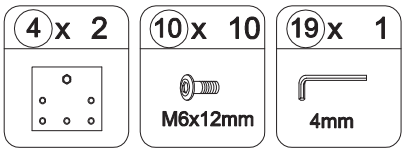

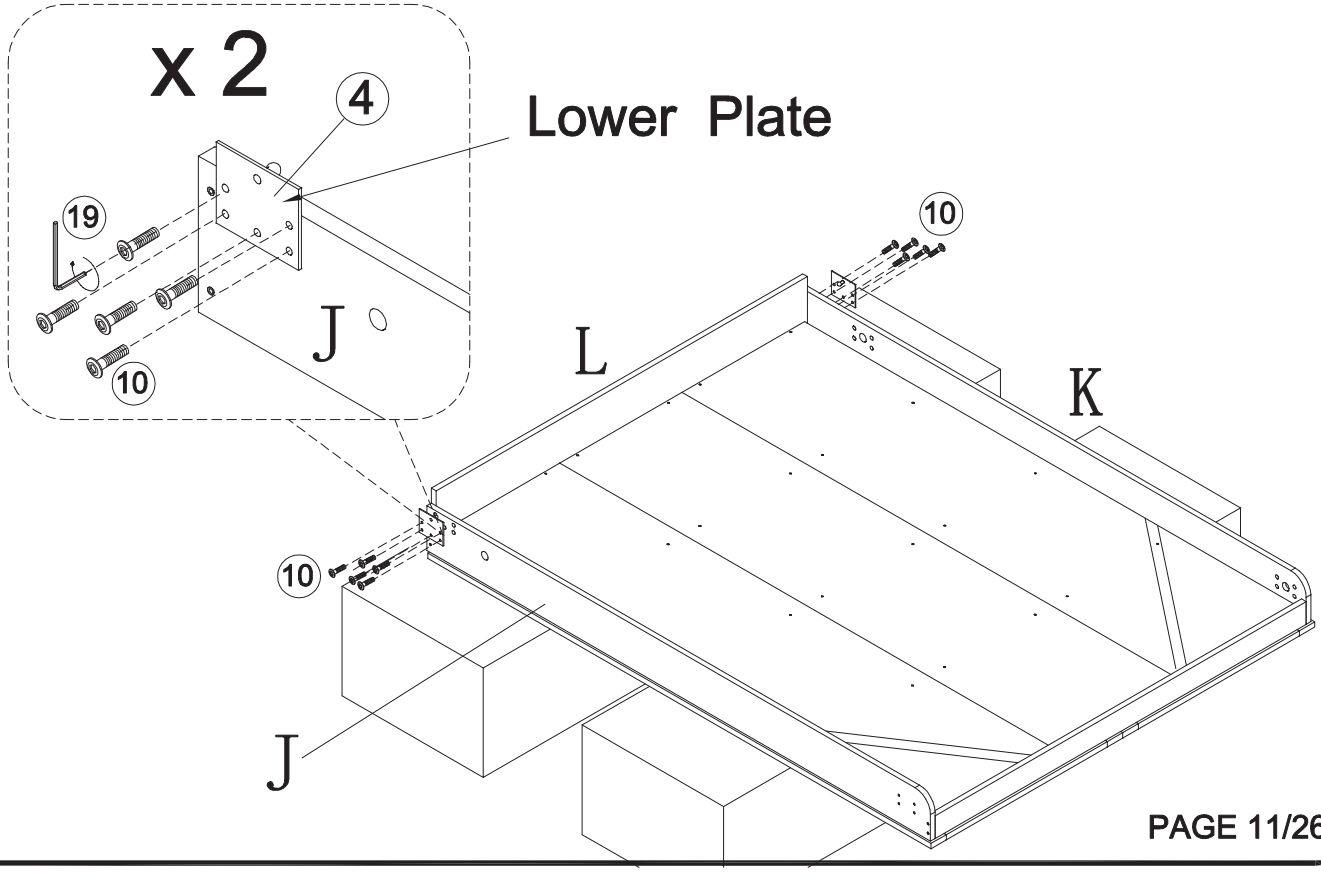

Step 13

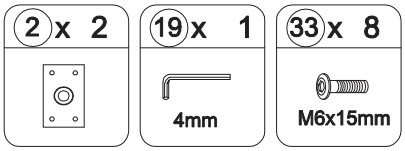

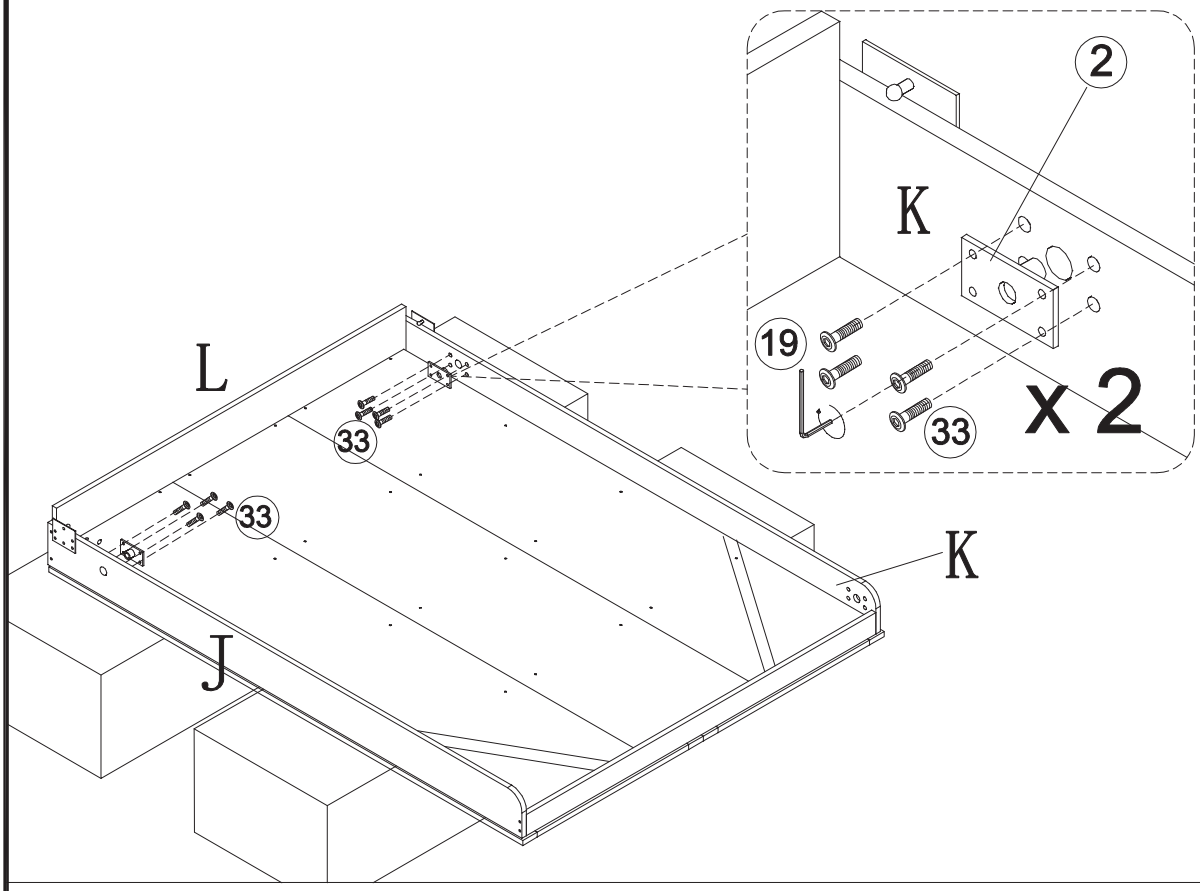

Step 14

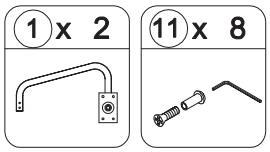

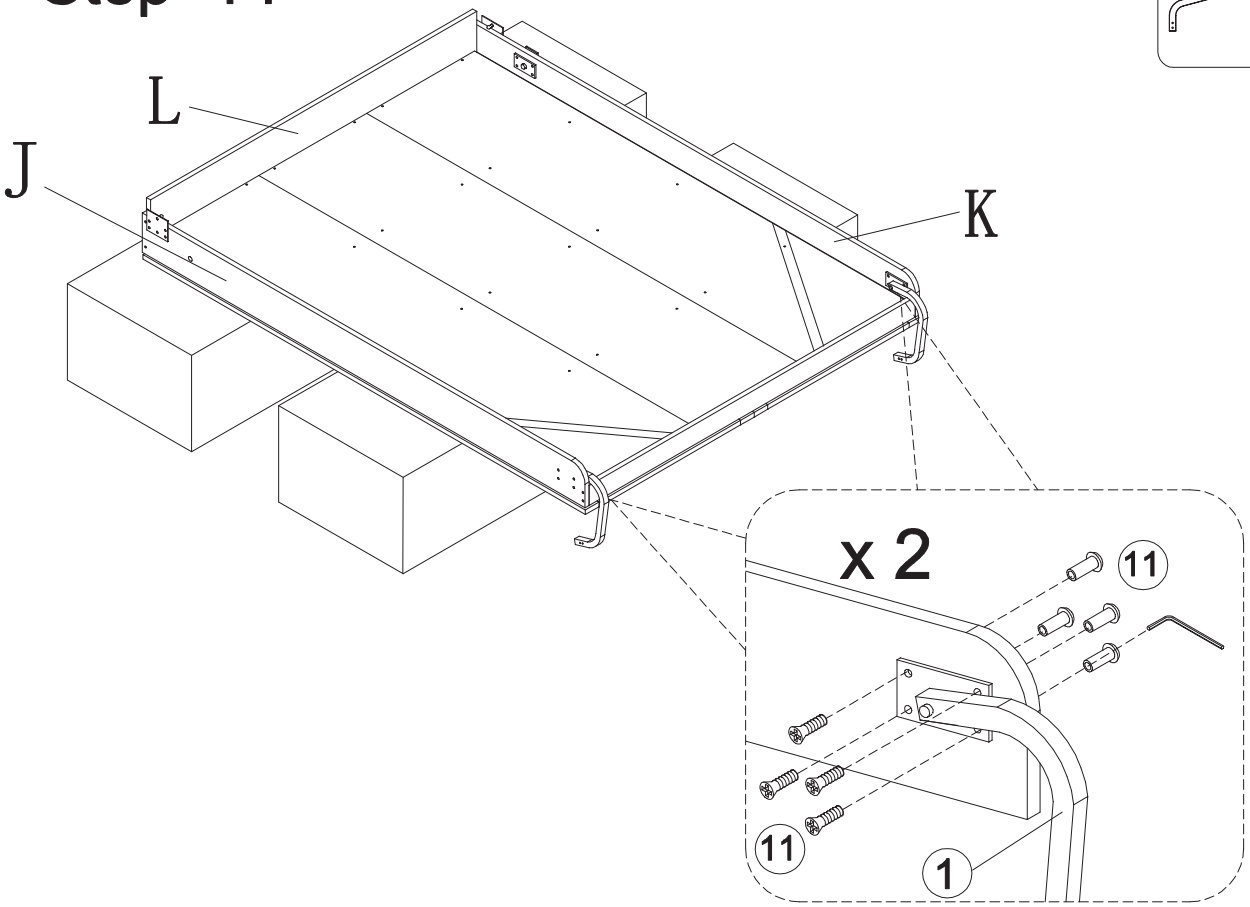

Step 15

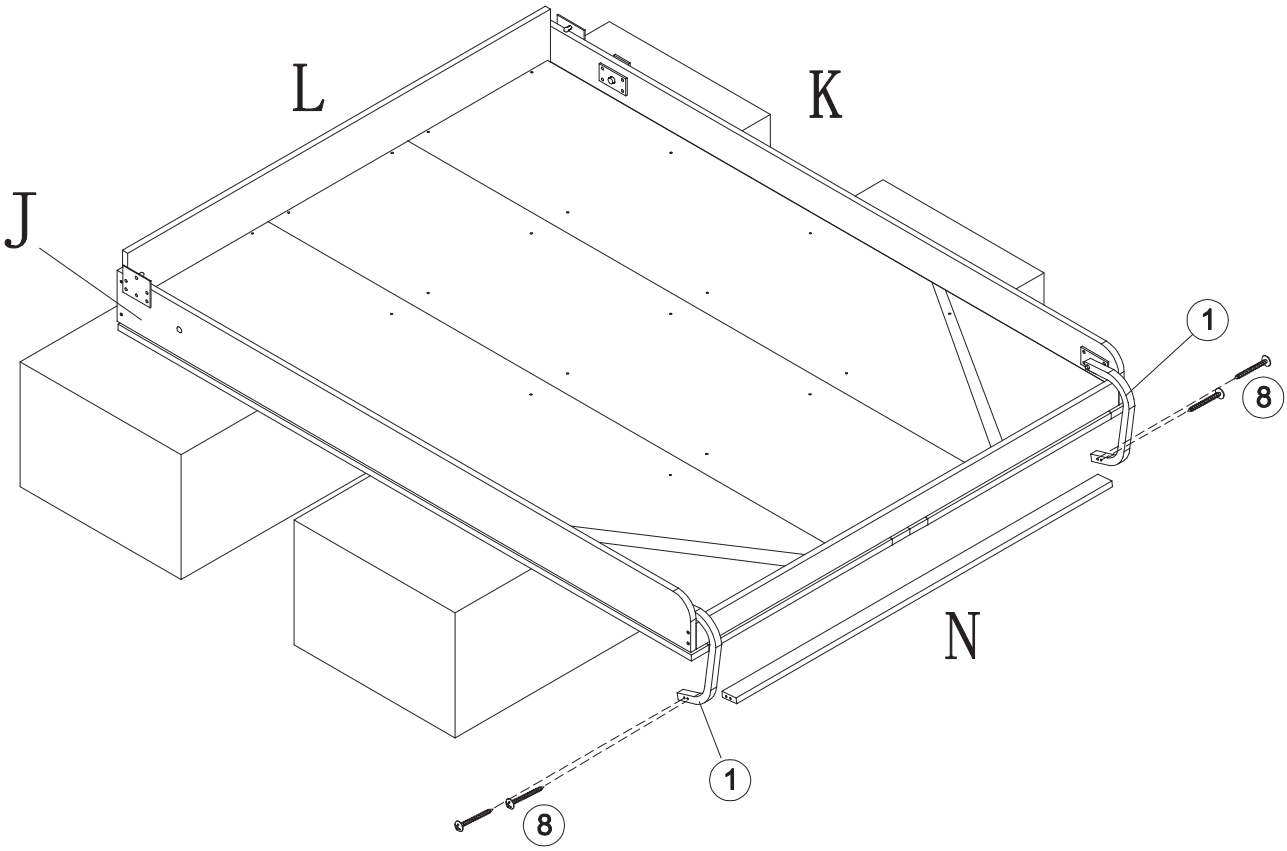

Step 16

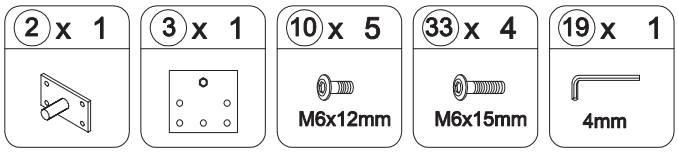

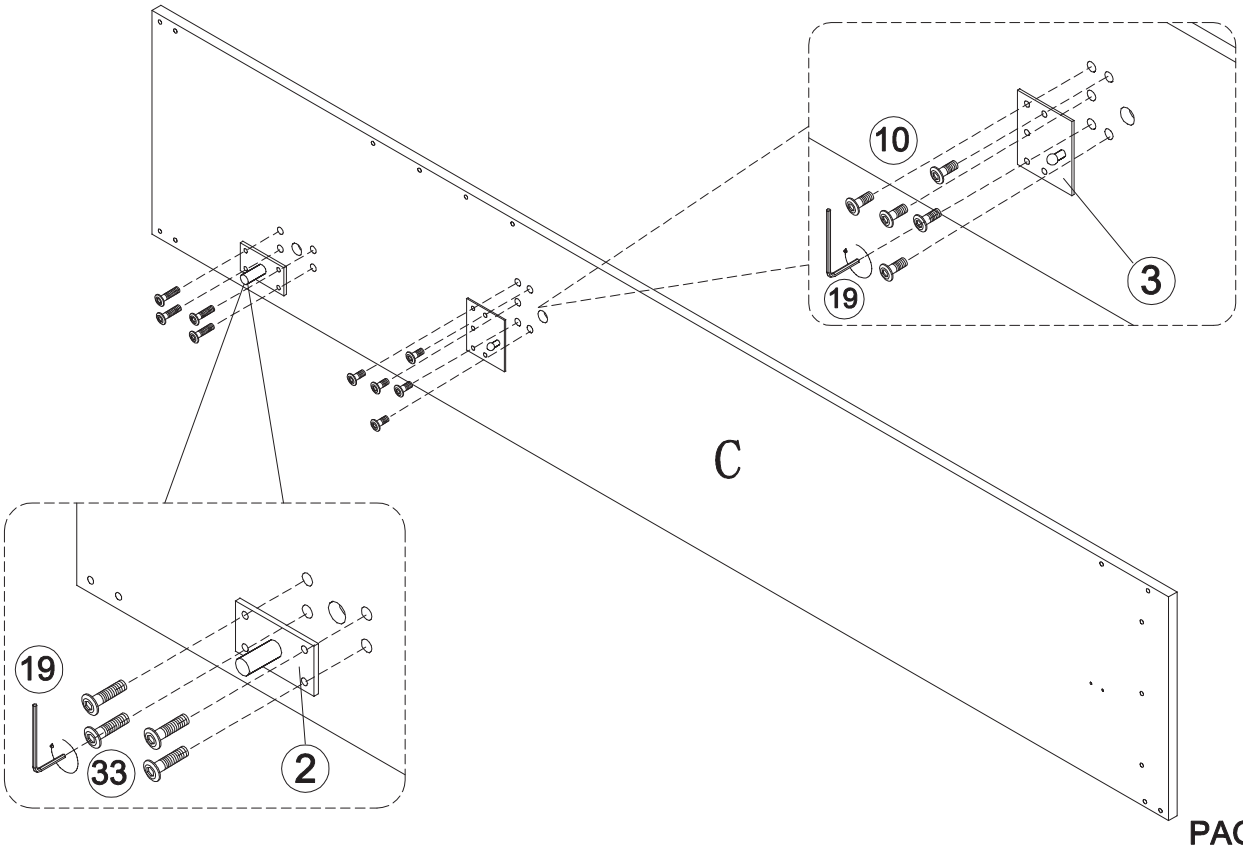

Step 17

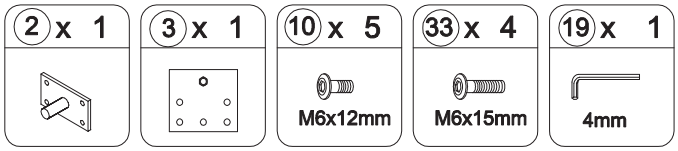

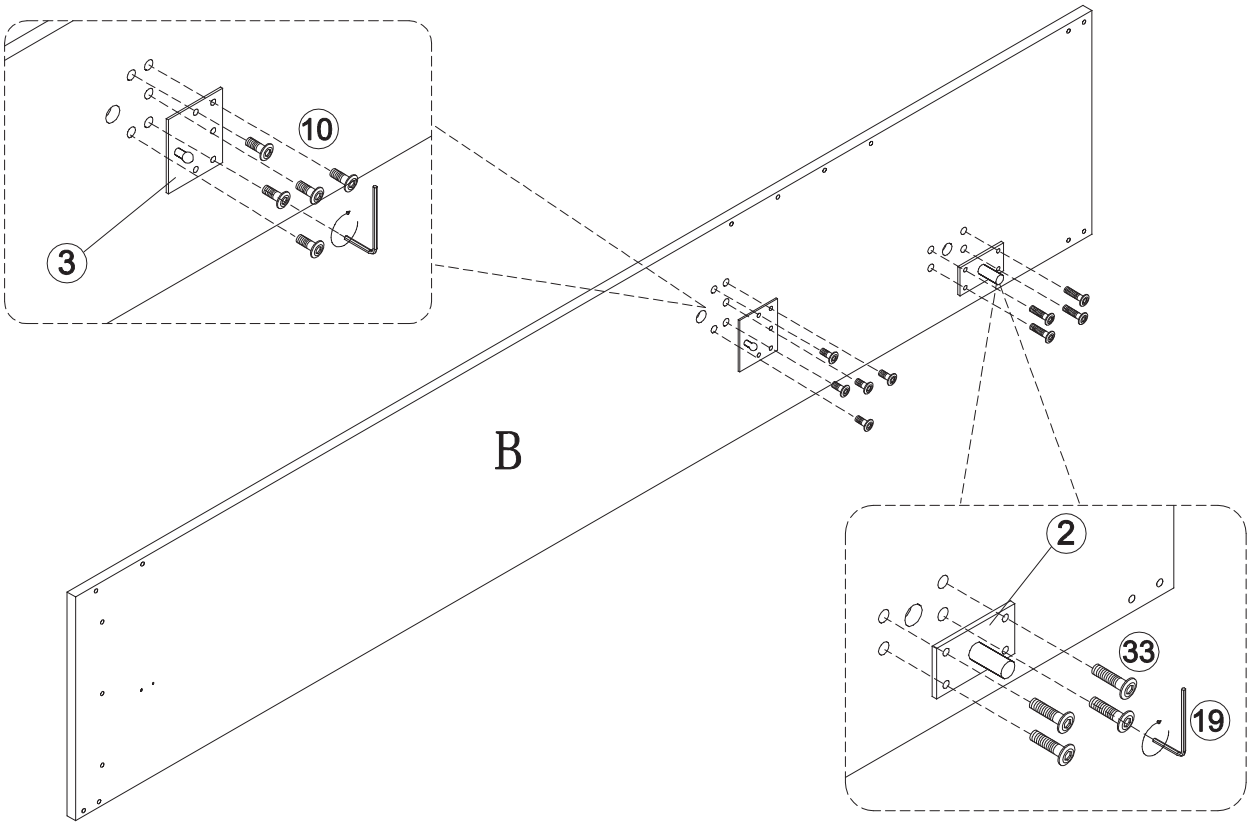

Step 18

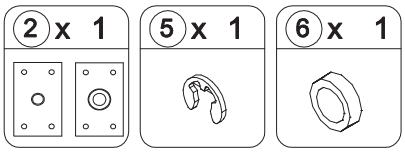

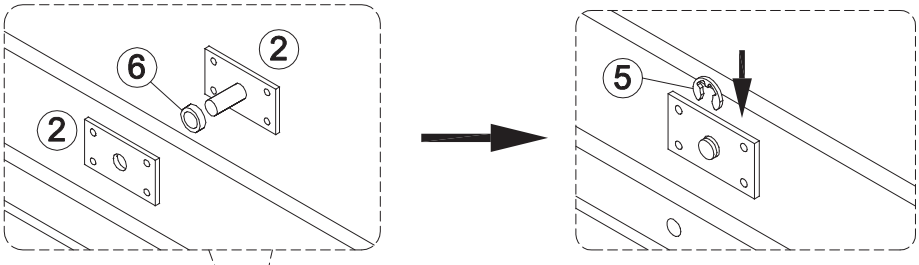

Need to squeeze in

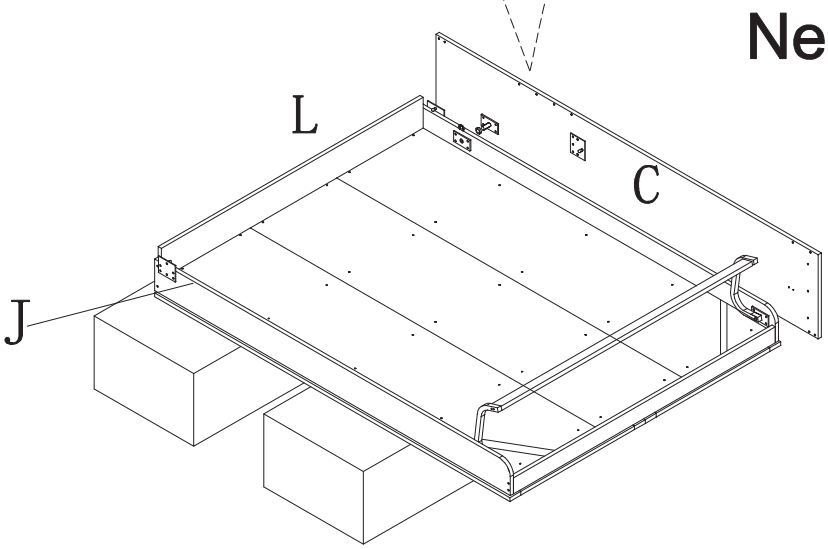

Step 19

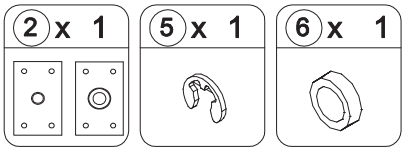

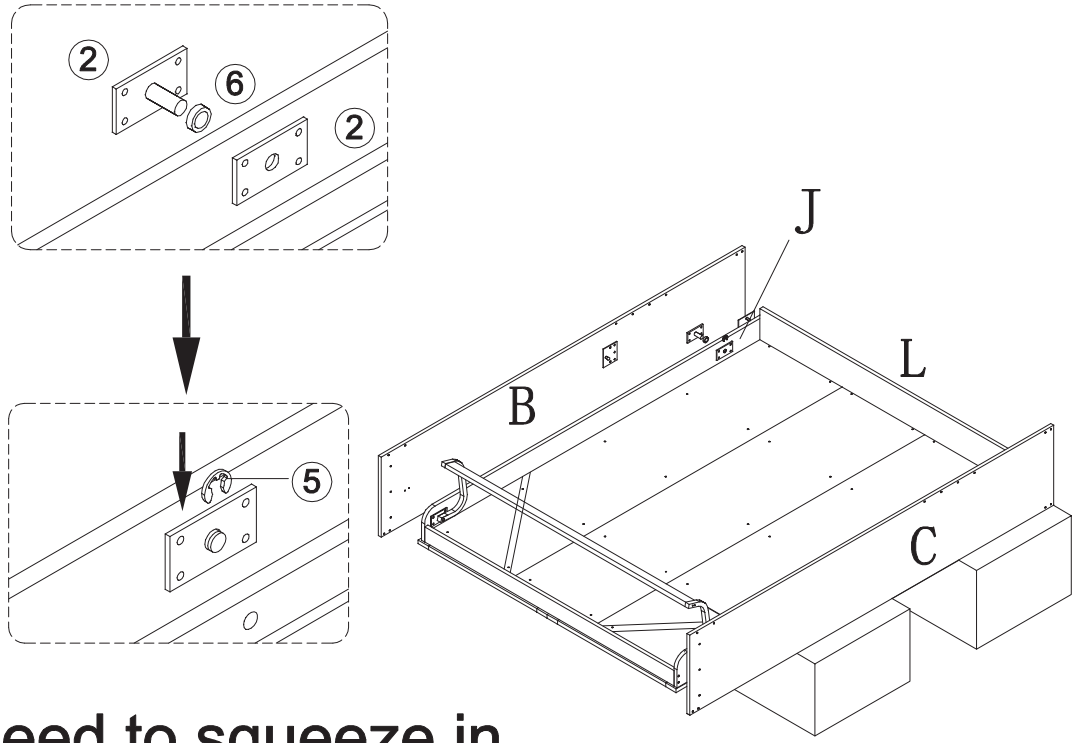

Need to squeeze in

Step 20

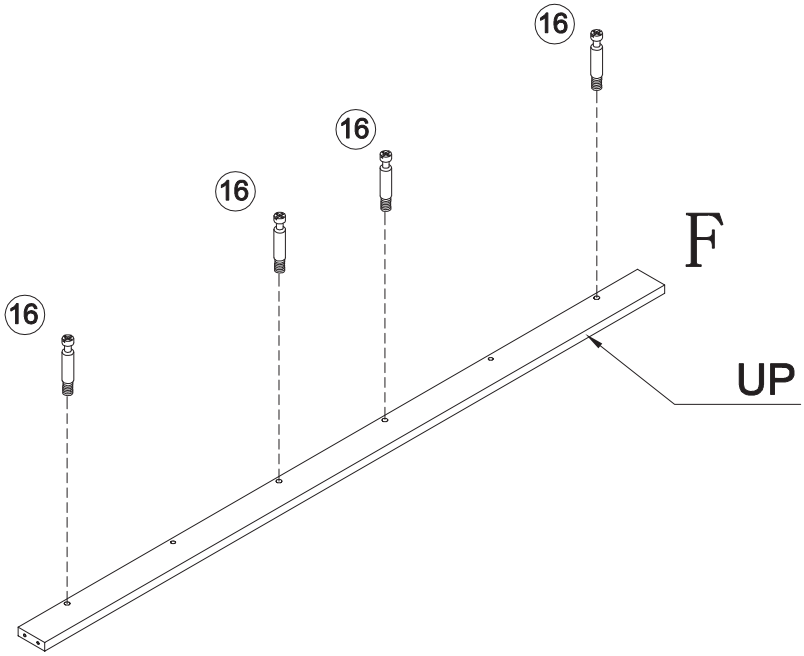

Step 21

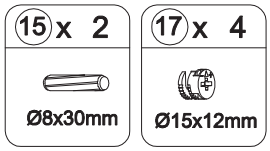

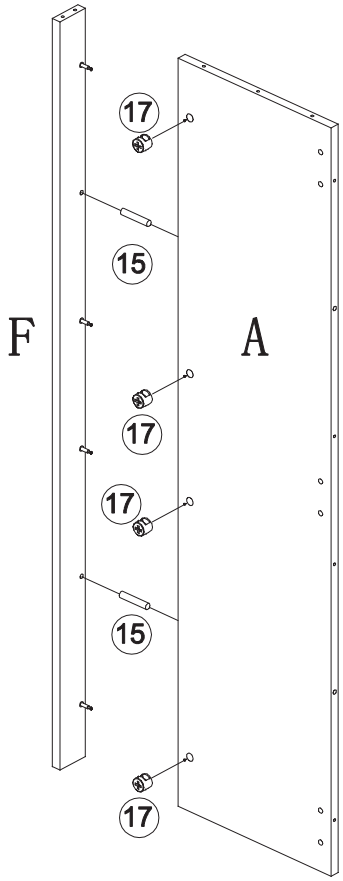

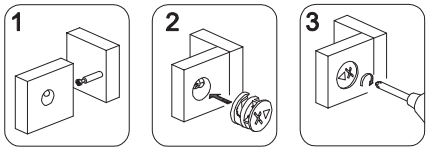

Step 22

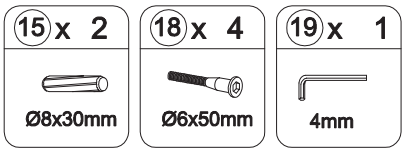

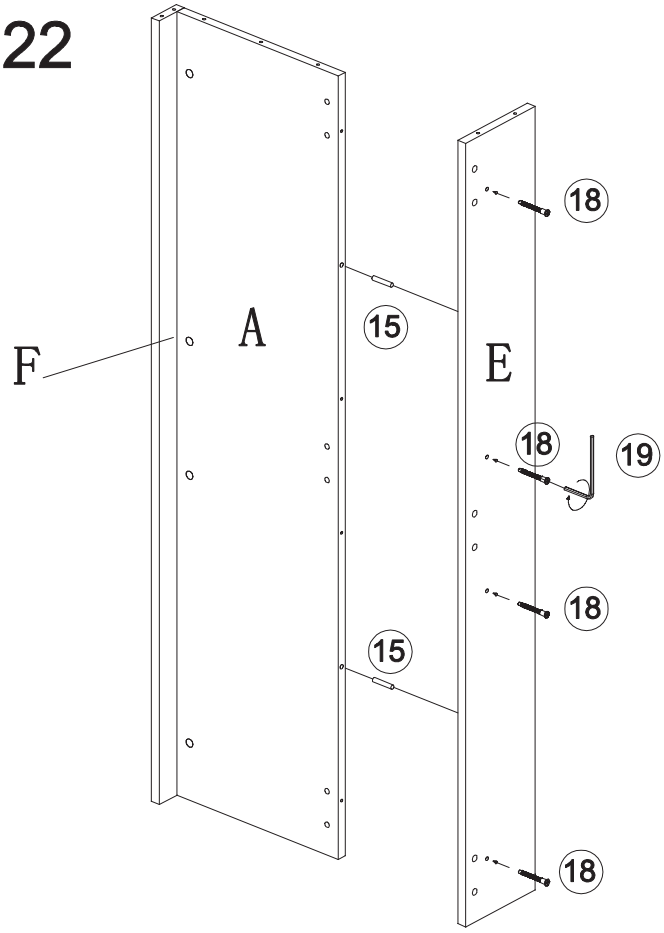

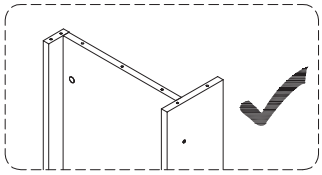

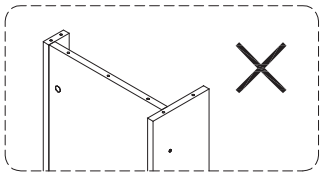

Step 23

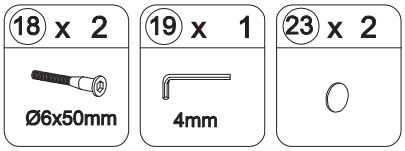

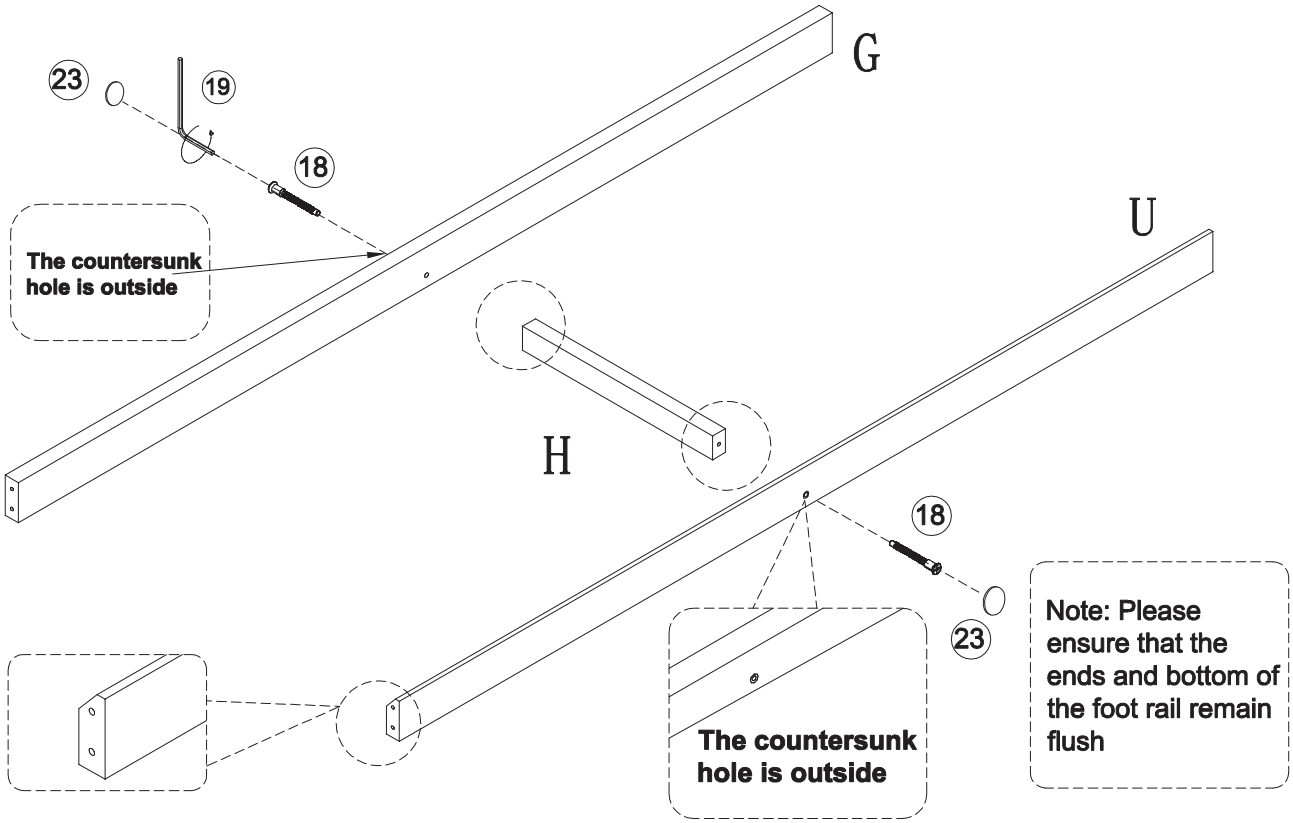

Step 24

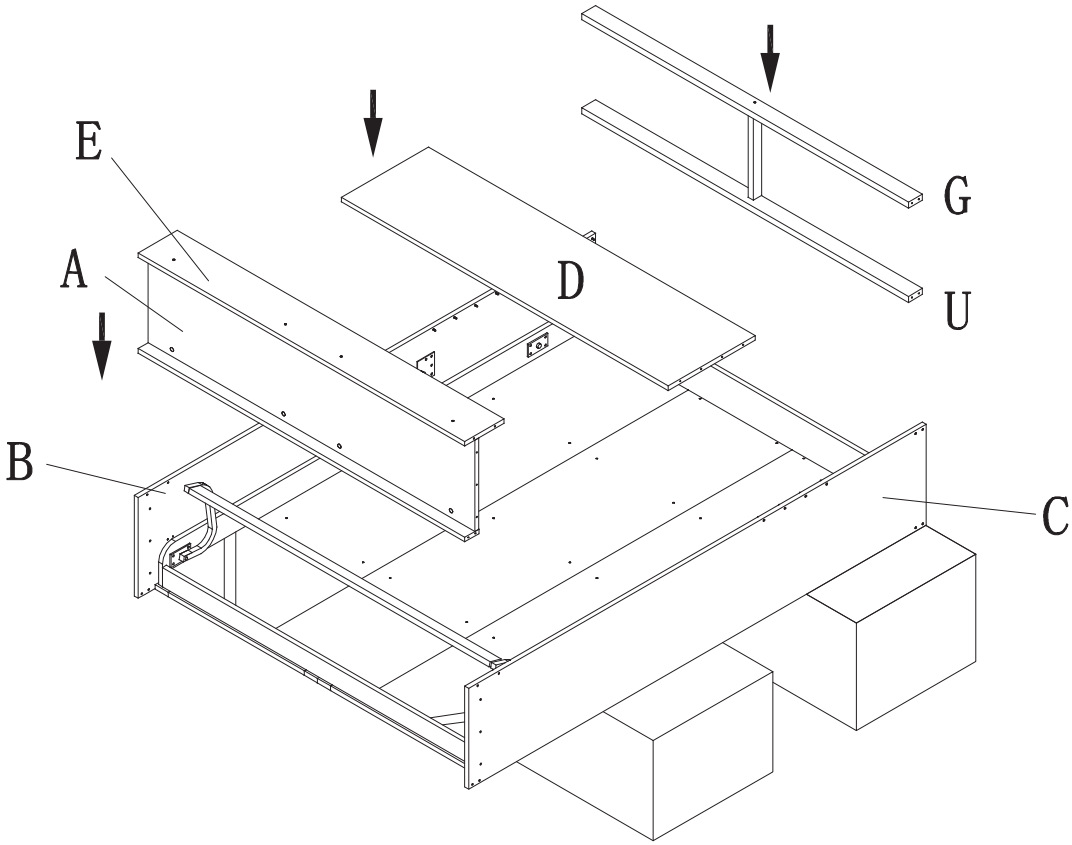

Step 25

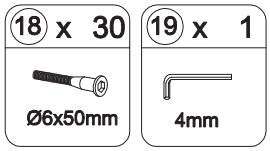

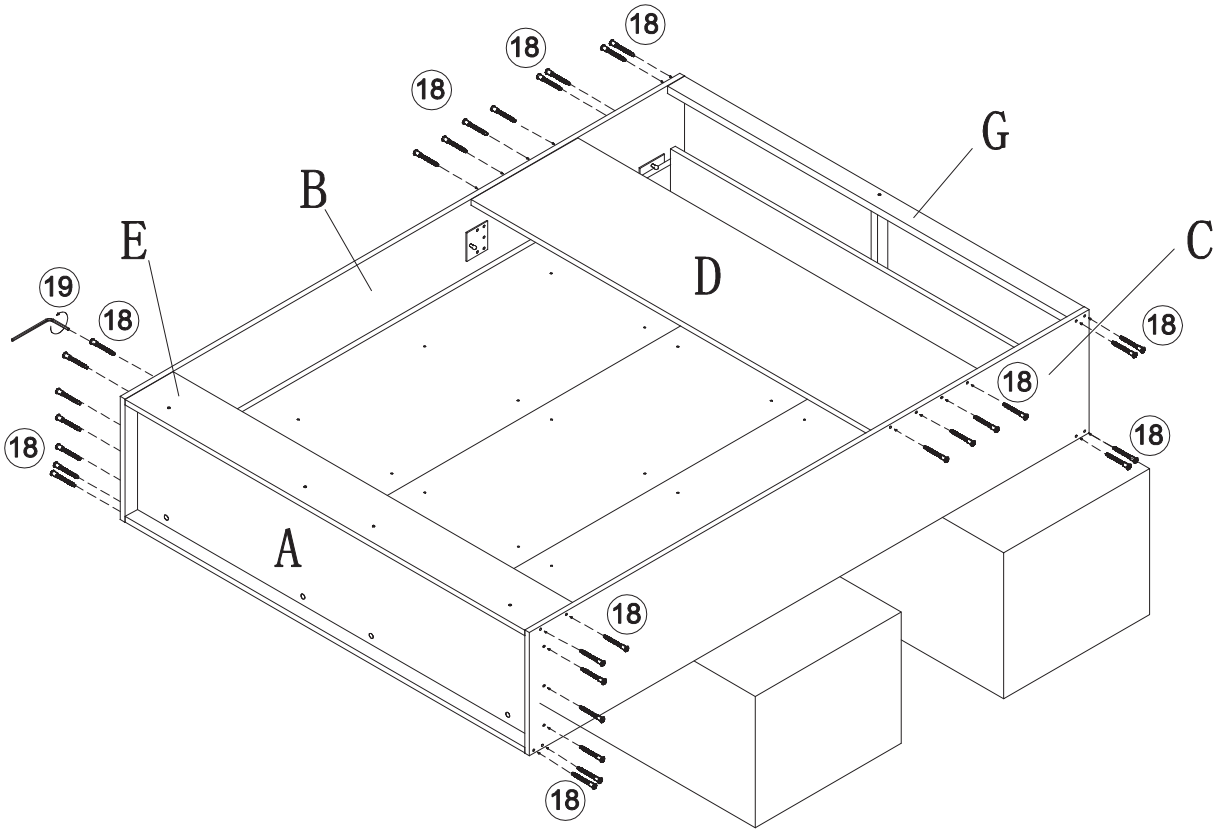

Step 26

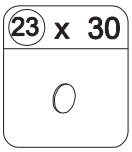

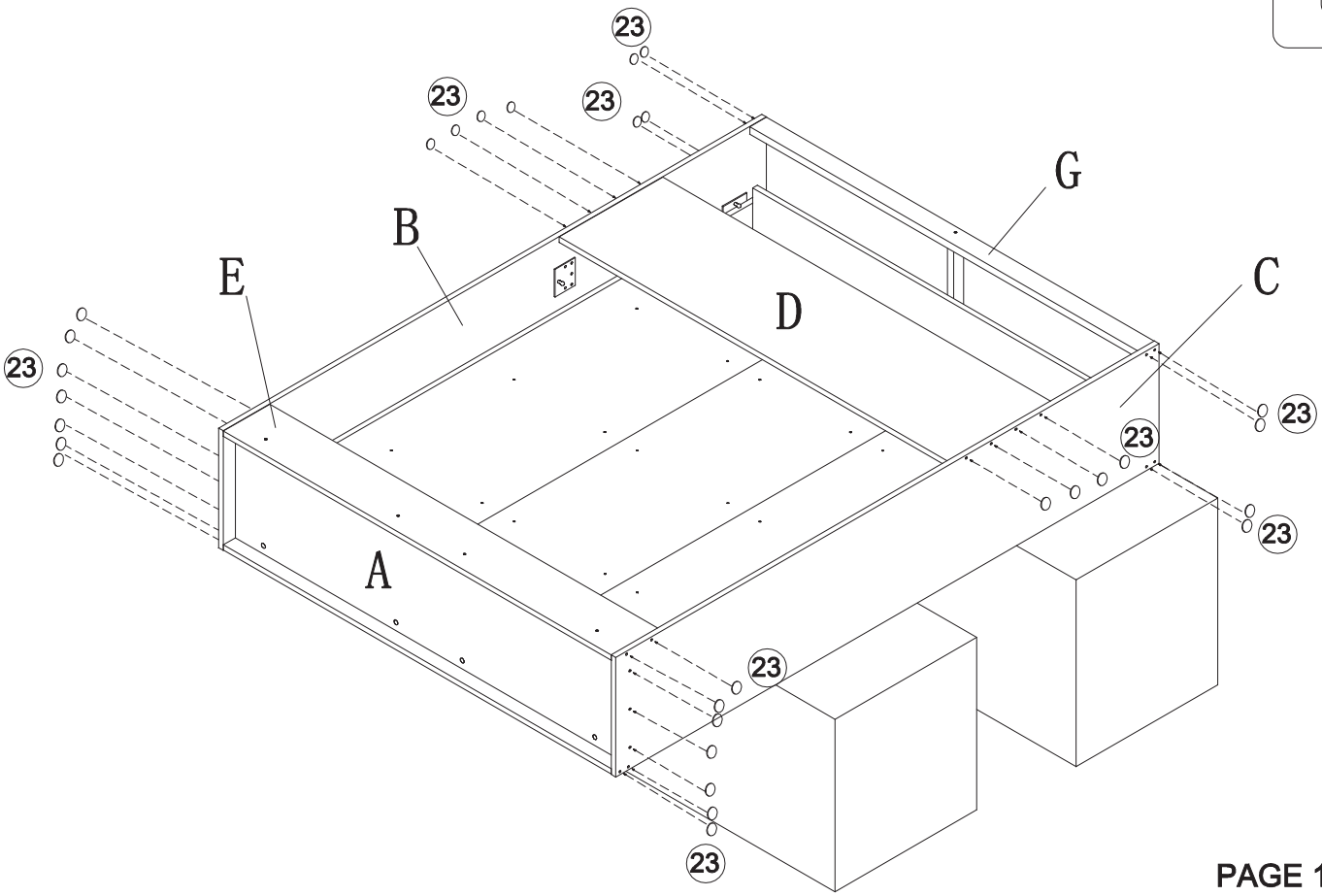

Step 27

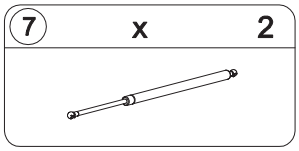

Position the bed cabinet about 2 to 3 feet from the wall, allowing enough room to work comfortably behind the bed cabinet.

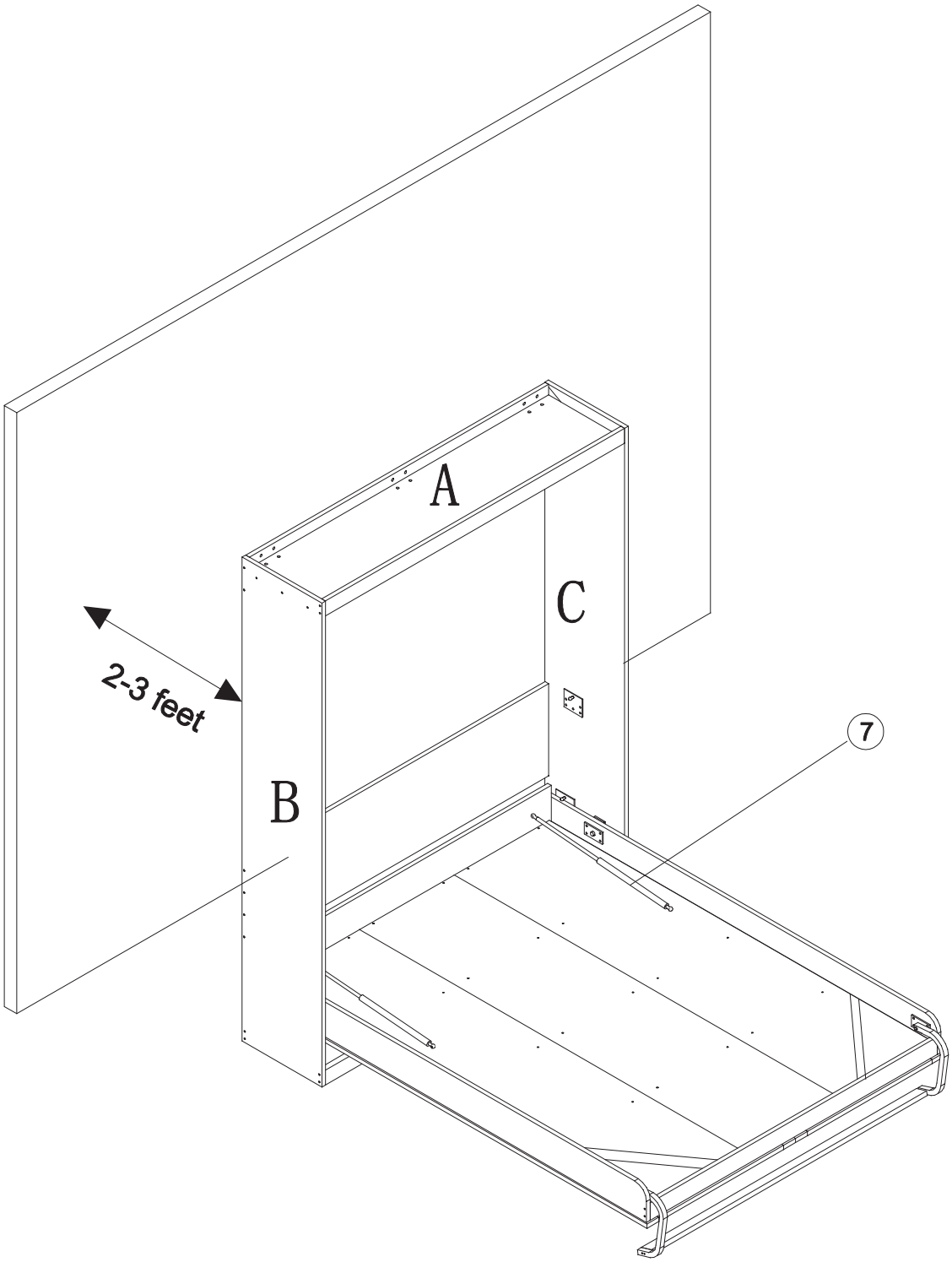

Step 28

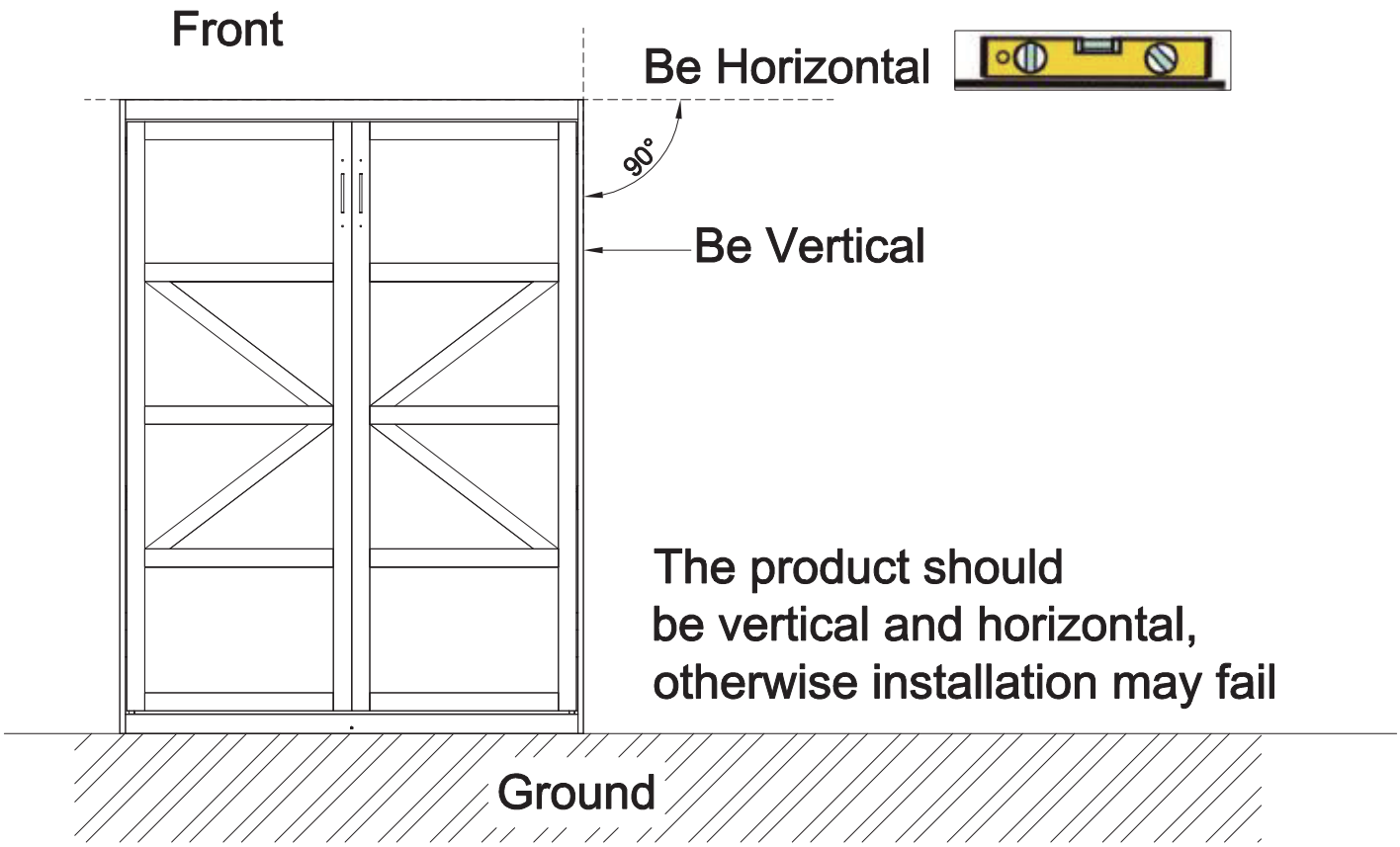
Front
Be Horizontal
90°
Be Vertical
The product should
be vertical and horizontal,
otherwise installation may fail
Ground

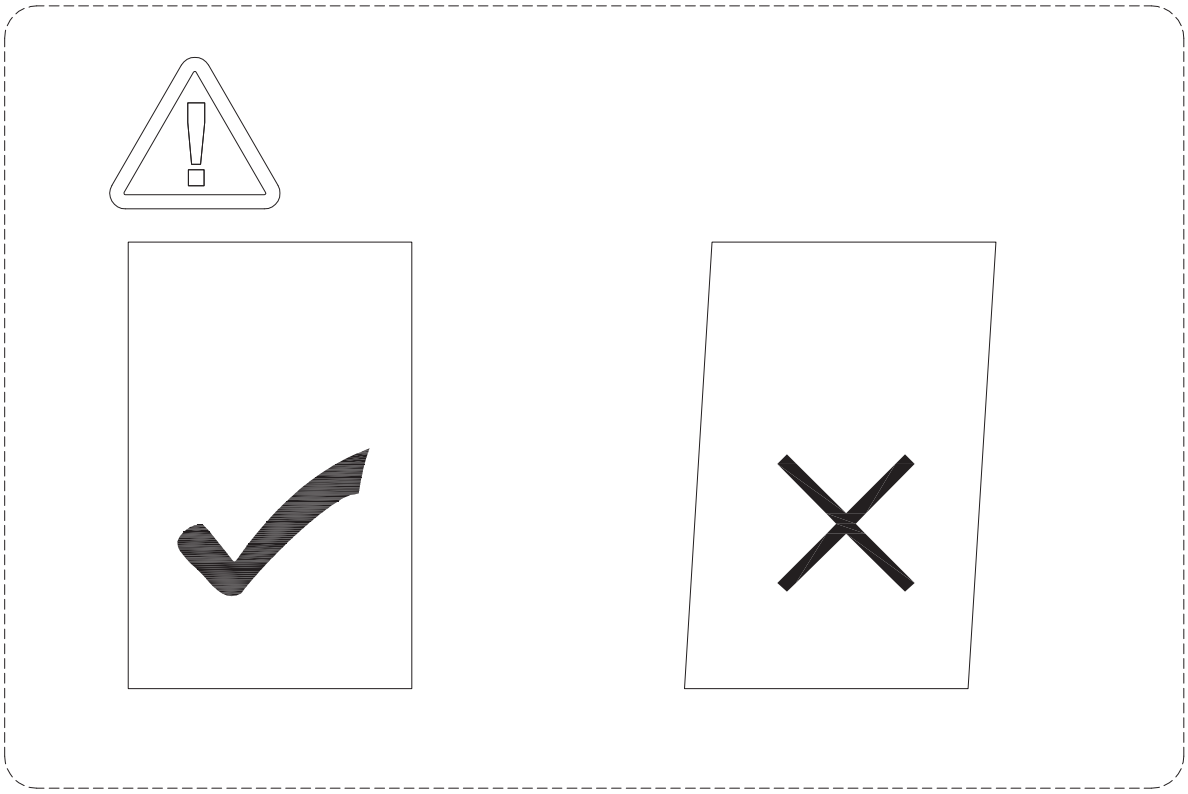

Step 29

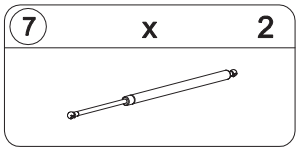

In order to prevent the ball stud plate from falling off easily, there are pins at both ends of the gas spring, first, take out the pins and hold them in your hands.

Note: Be sure to orient the gas spring correctly by referring to the label on each gas spring,("mount this end up").

Clamp the ball head at the lower end of the gas spring on the side rail ball stud plate, Then insert the pin into the ball head of the gas spring.

Note: The pin must pass through the two holes on the ball head. And test and make sure the gas spring will not come off easily.

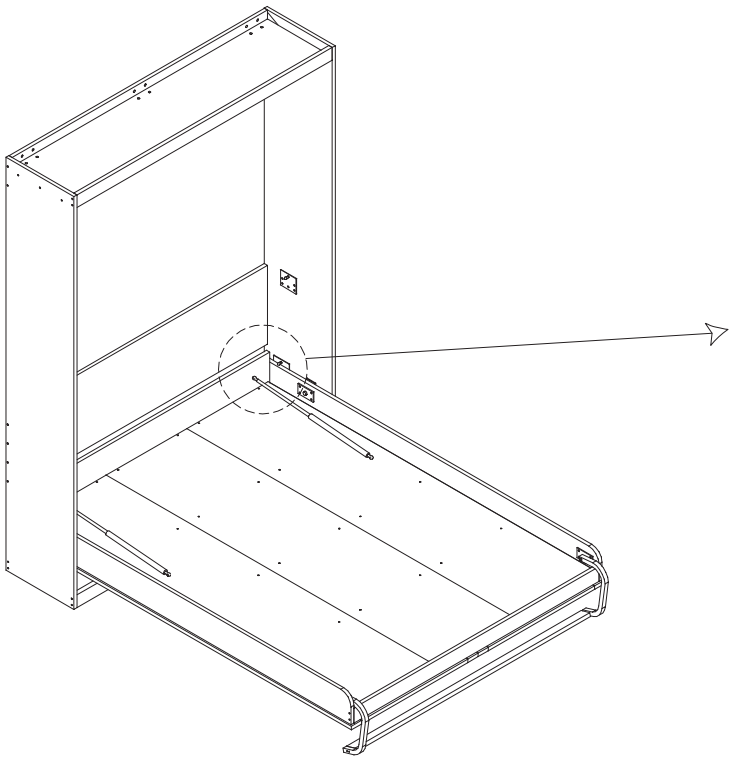

Step 30

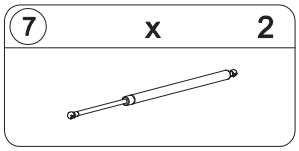

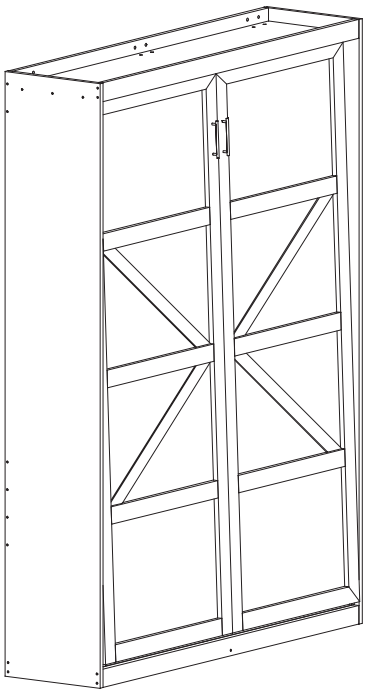

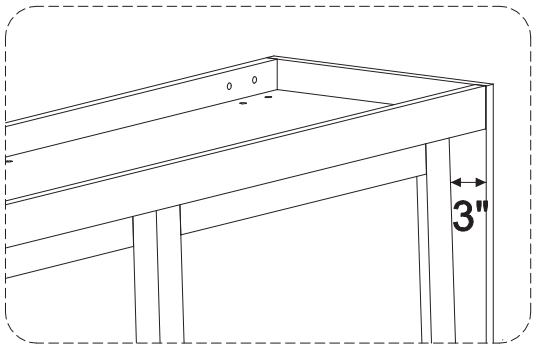

You must first find a helper to hold the bed cabinet and then return the bed about 3 inches into the cabinet.

Clamp the ball end at the upper end of the gas spring on the bed cabinet verticals column ball stud plate.

Then insert the pin into the ball head of the gas spring.

Note: The pin must pass through the two holes on the ball head. And test and make sure the gas spring will not come off easily.

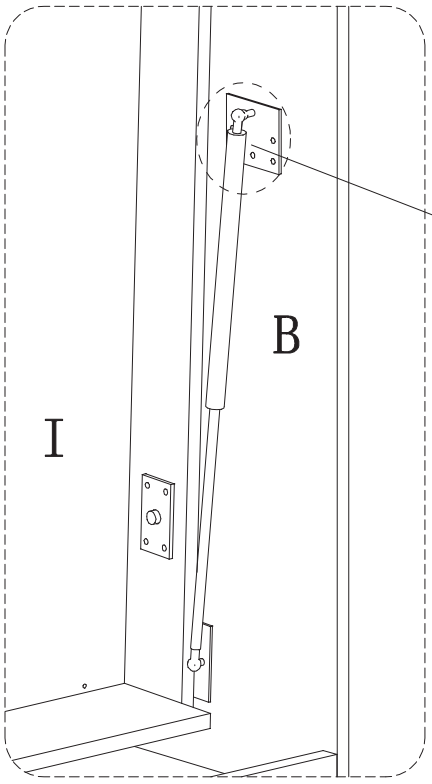

Step 31

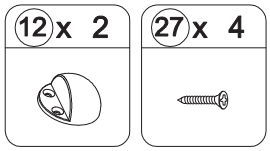

center the face panel between the verticals by placing a piece of folded cardboard between the face panel and each of the two verticals as illustrated

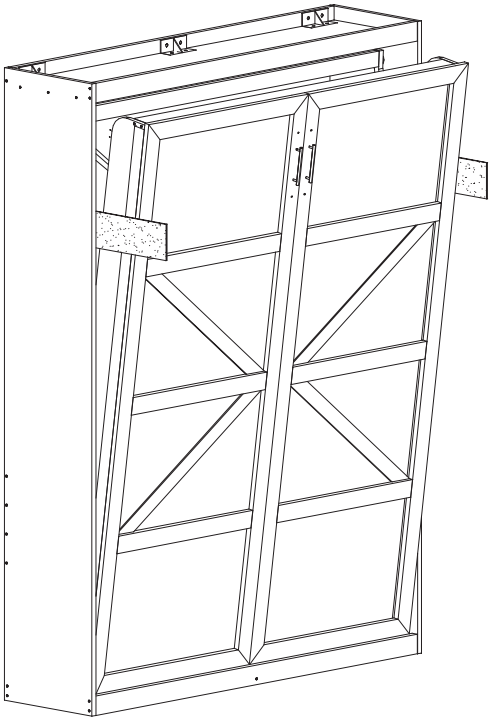

With a helper securely holding the bed cabinet, pull the bed out of the cabinet
4 to 5 inches. Working from behind the cabinet, install the bed stop.

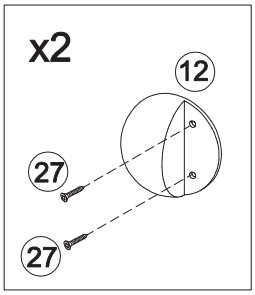

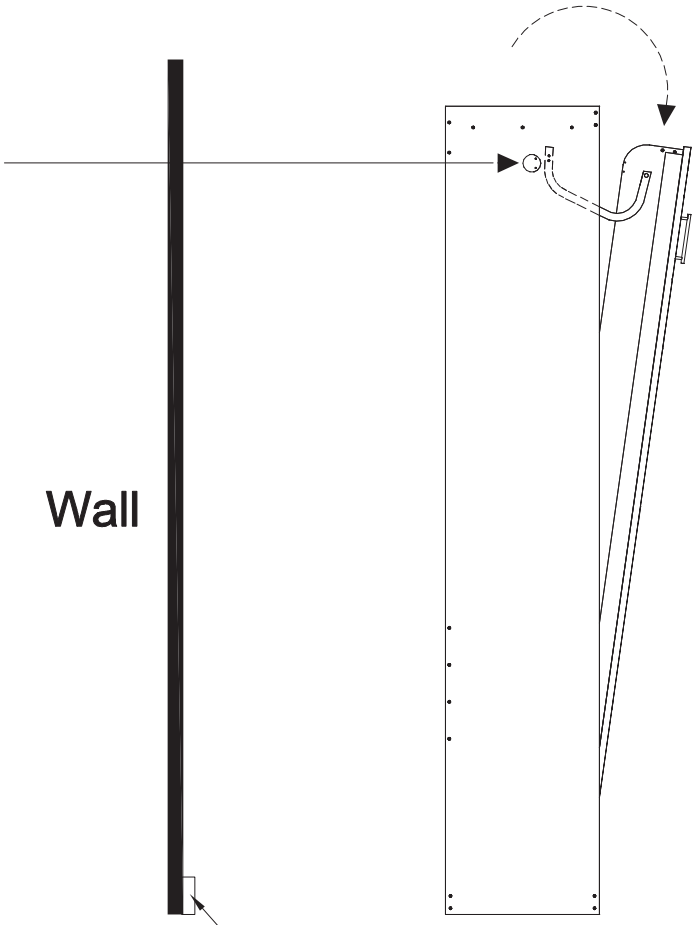

Tip:
If there is a baseboard in the room, you need to make a gap in the baseboard.If the room does not have baseboard, simply align the cabinet with the wall.

make a gapto make the cabinet against the wall

Step 32

This side is the wall

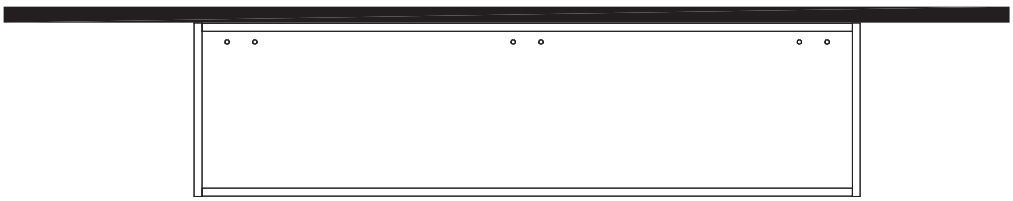

Assuring that the top and
bottom of the bed cabinet
are against the wall

Professional installation is required

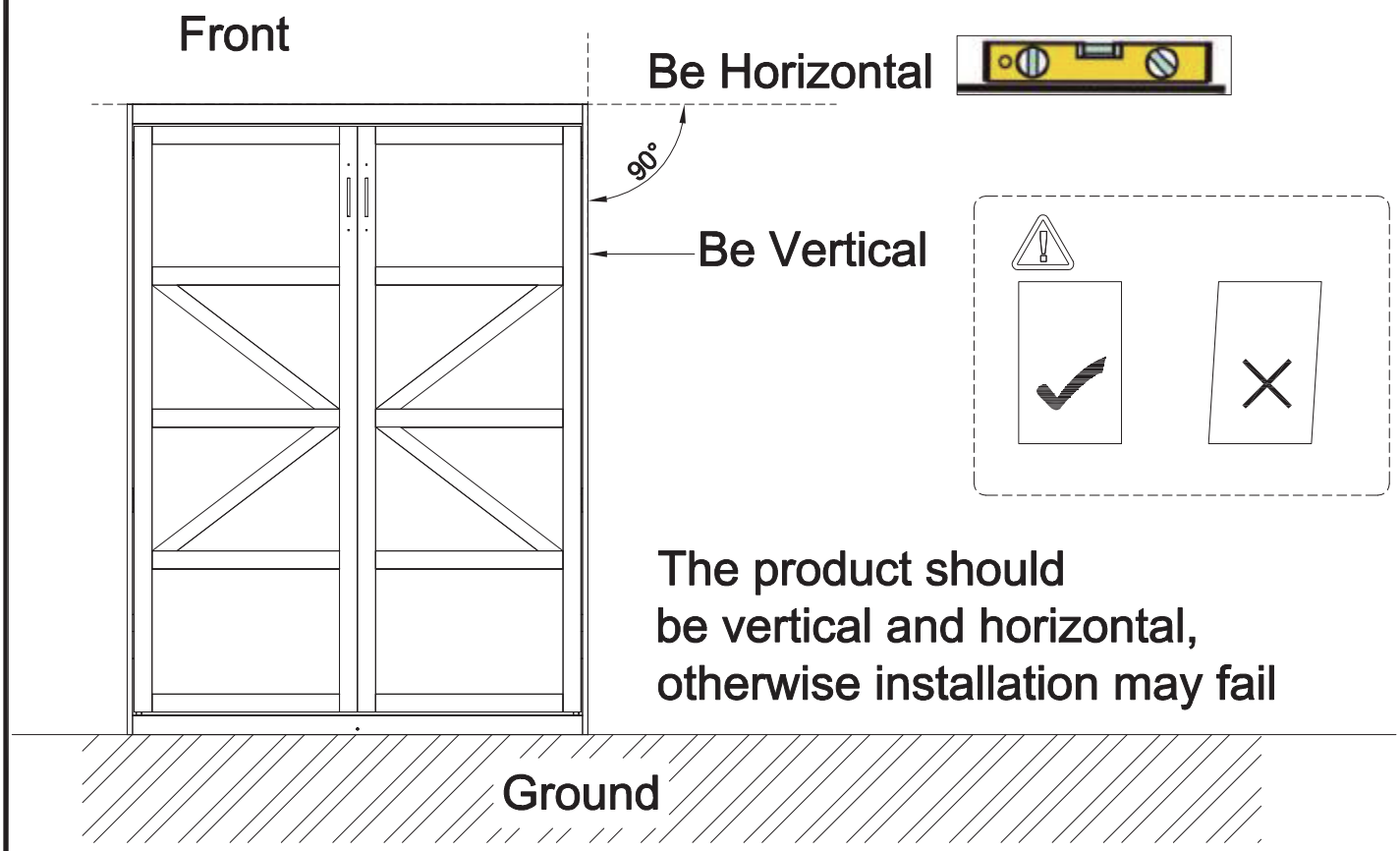

The product should
be vertical and horizontal,
otherwise installation may fail

Step 33

Wall

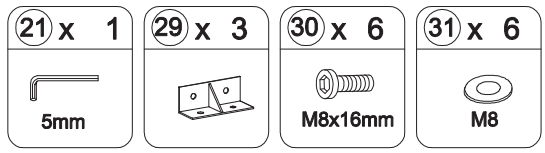

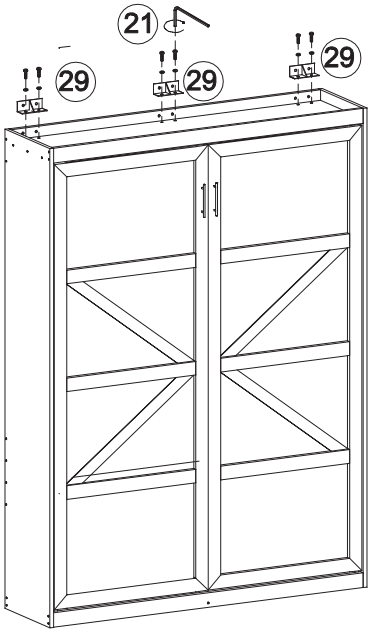

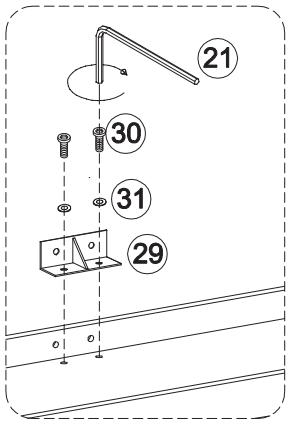

Professional installation required

Step 34

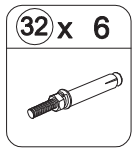

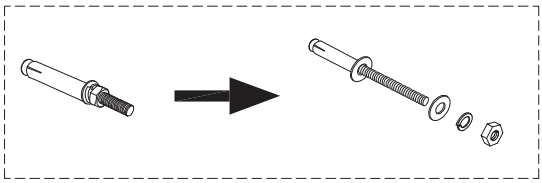

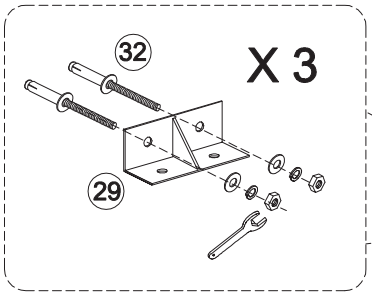

Wall

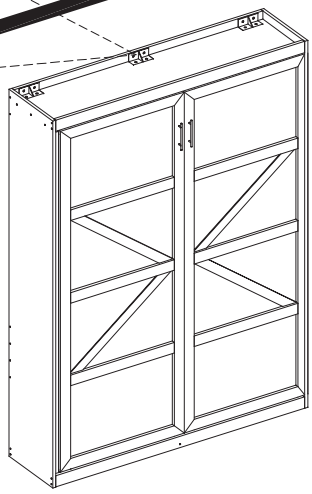

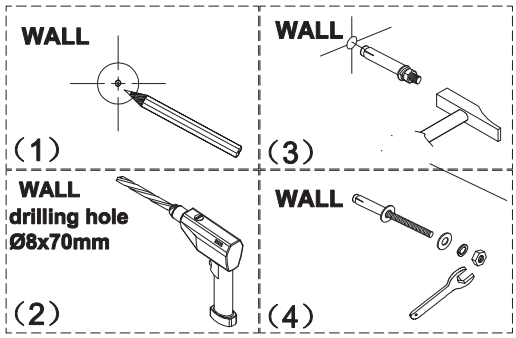

Note:
This step is very important!! Your bed must be securely and correctly anchored to the wall to assure proper operation and avoid possible injury. The bed cabinet MUST be securely anchored to the wall using the correct fasteners for your type of wall.

Step 35

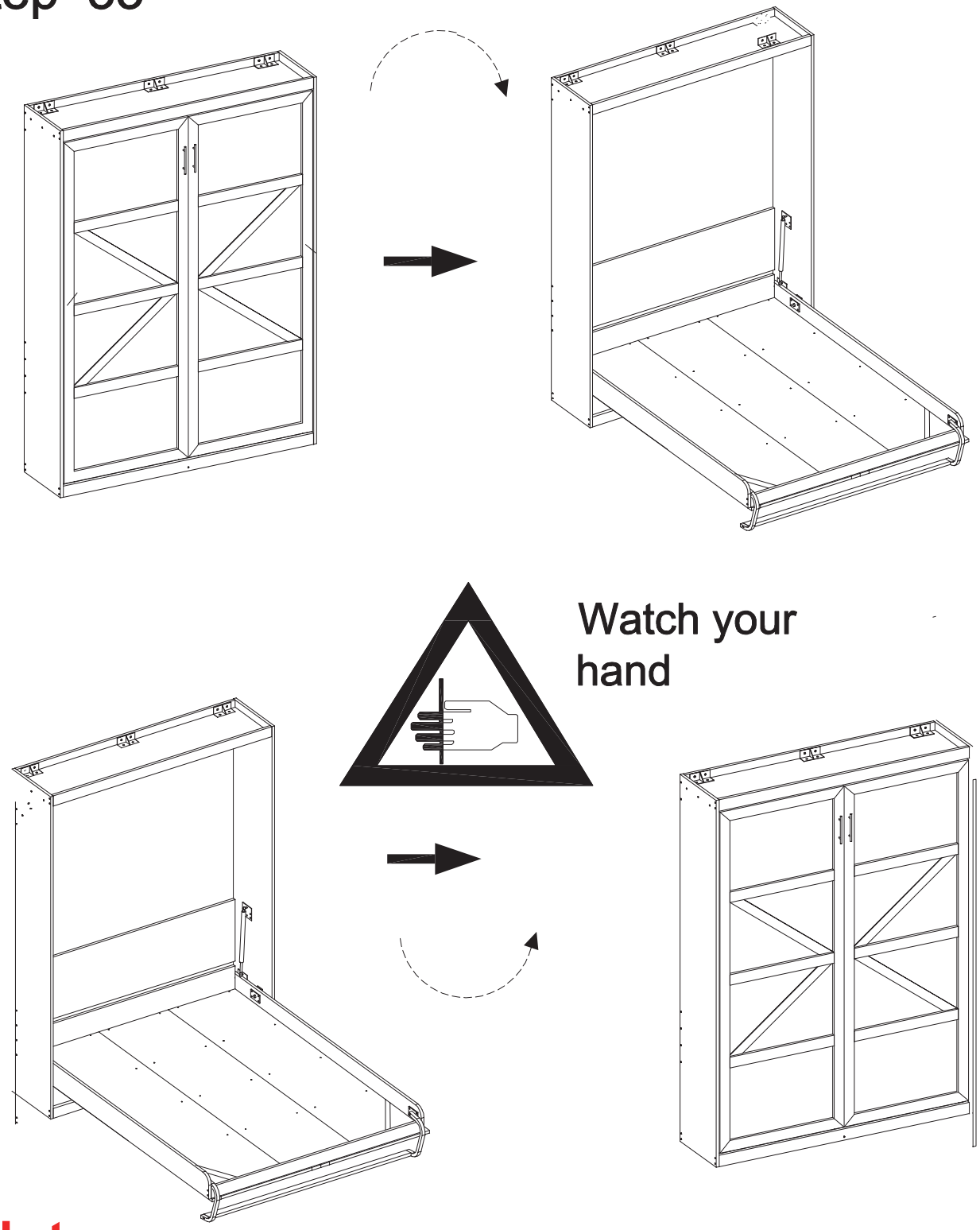

Note:

Your mattress cannot be larger than 54 x 75 inches in size, and it cannot be thicker than 12 inches, including any pillow top.

The mattress must be between 50 - 65 pounds.

AFTER-SALES SERVICE CARD

We sincerely thank you for trusting our service and our products, and may this product add enrichment to your home. We guarantee that the product has undergone strict quality inspection and meticulous packaging. If you encounter any issues regarding either shipping or the product, please feel free to contact us at any time. We'd be more than happy to serve you wholeheartedly.
Yours Sincerely

- Please avoid harsh, corrosive, and abrasive cleaners.

- Keep dry and avoid damp environments.

- After installing the gas spring, be sure to fix the bed firmly, and then slowly pull the bed down!!

- It is very difficult when lowering the bed without the mattressbalance, The weight of the mattress must be MUST weigh between 50- 65 pounds, If the mattress is too light, the bed tends tofloat off the floor, You can add some weight, such as a piece ofparticle board, wood, etc.

If you have any questions or concerns please feel free to contact us.
We're committed to providing our customers with the quality service.