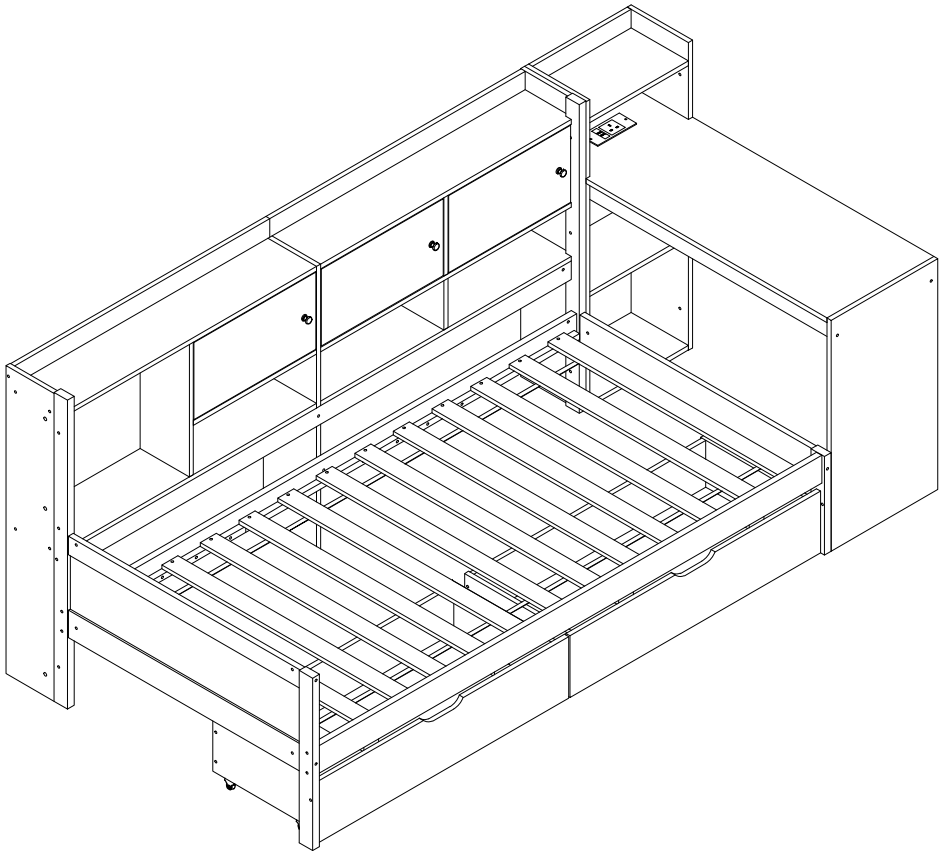
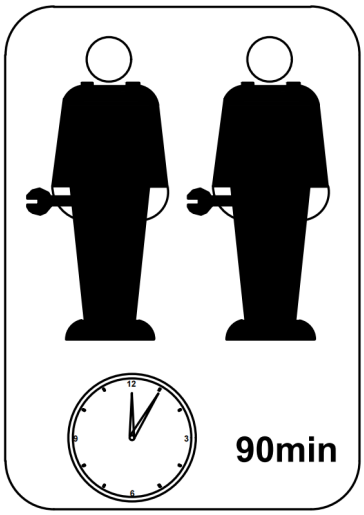
ASSEMBLY INSTRUCTIONS

ItemNumber: N652P373262
N652P373263
N652P373264



This set comes in 3 boxes.If you do not receive a full 3 boxes, please contact our customer service.



INSTRUCTIONS

IMPORTANT-READ CAREFULLY-RETAIN FOR FUTURE REFERENCE

a) **WARNING** -Children can become trapped between the bed and the wall, the adjoining pieces of furniture (e.g. cupboards) and the lke. To avoid risk of serious injury the distance between the safety barrier and the adjoining structure shall not exceed 90 mm or shall be more than 230 mm.

b) **WARNING**-Do not use the bed if any structural part is broken or missing; Replacement parts are between requested from the manufacturer or the store.

c) **WARNING**-Do not climb or wiggle on any non-designated structures.

d) it is imperative to always follow the installation instructions and manufacturer's use.

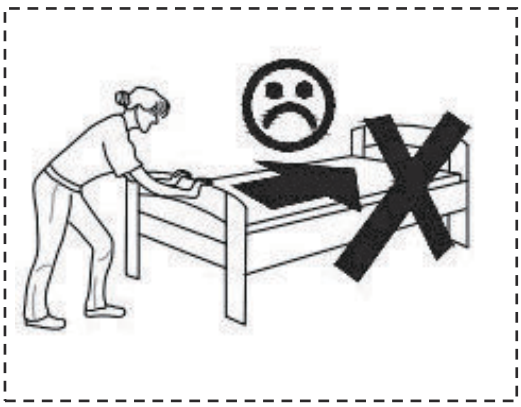
e) The recommended size of the mattress to be used with the bed is 190cmx90cm.

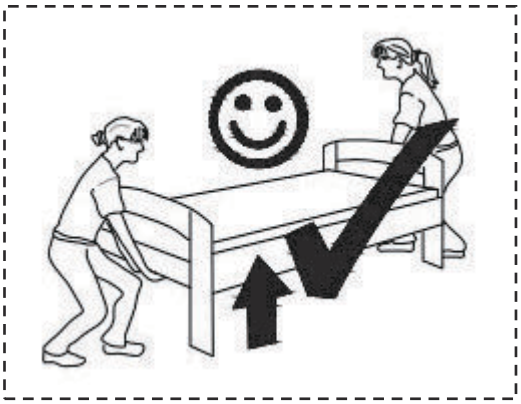
f) It is necessary to ventilate the room in order to maintain a low level moisture and prevent mold growth in the bed and its periphery.

g) Joining devices should always be tightened properly and regularly verified. Tighten if necessary.

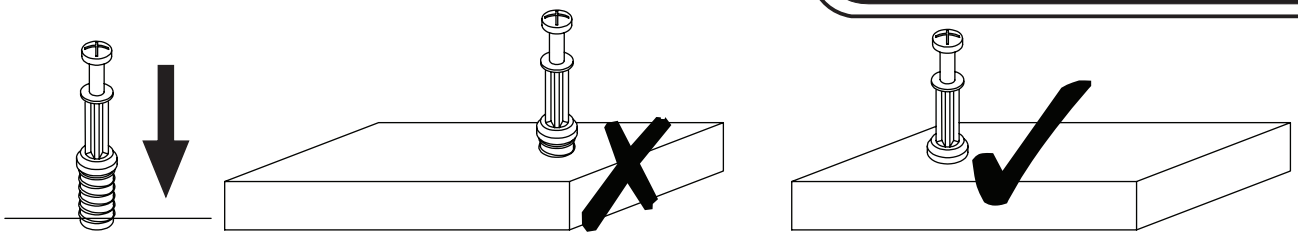
English **IMPORTANT ! KEEP FOR FUTURE REFERENCE : READ CAREFULLY**

- To be assembled by an adult. Assembly must be checked by an adult before use
- WARNING ! Keep all screws, small parts and plastic bags out of the reach of children
- Properly identify all parts before assembling
- Never use your item if any of its parts are broken or missing
- Should any problems arise, please contact our After Sales Service
- Manufacturer's instructions shall be followed at all times
- Care: Clean with a soft, dry cloth. In case of larger stains, carefully rub with a slightly damp, non-abrasive sponge
- Avoid the risk of fire by not placing furniture near sources of ignition or hot items
- Do not jump on the bed

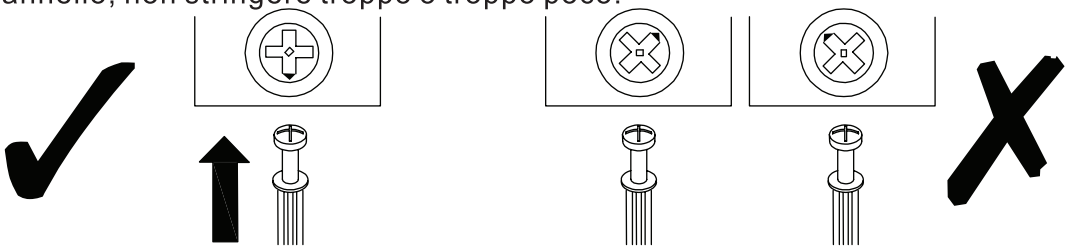




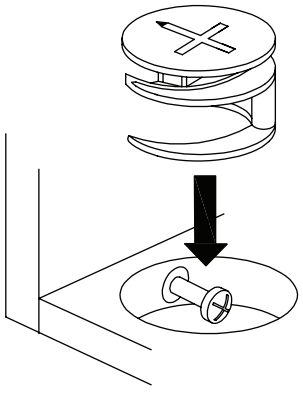




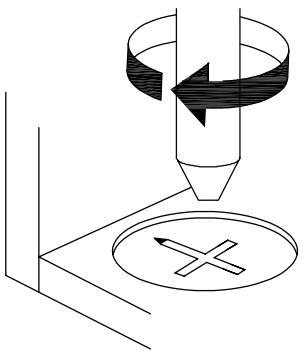
EN_QUICKFIT: Tighten quickfit until shoulder is flush with panel.Do not overtighten or undertighten.
FR_RACCORD RAPIDE:Faites serrer le raccord rapide jusqu'à ce que l'épaulement soit parfaitement encastré dans le panneau. Il ne faut ni trop serrer ni insuffisamment serrer.
ES_QUICKFIT:Apriete quickfit hasta que el hombre se descargue con el panel. NO lo sobreapriete ni lo apriete poco.
DE_QUICKFIT:Ziehen Sie den Quickfit fest, bis die Schulter mit der Platte bündig ist. Bitte nicht zu fest oder zu schwach anziehen.
IT_MONTAGGIO RAPIDO:Stringere il montaggio rapido fino a quando la spalla è a filo con il pannello, non stringere troppo o troppo poco.



EN_CAM LOCK: When fitting cam lock, ensure starting position is correct before you insert connecting quickfit.
FR_SERRURE BATTEUSE:Avant d'insérer la serrure batteuse, veillez à la bonne orientation avant d'insérer le raccord rapide.
ES_CIERRE DE LA CÁMARA:Cuando instale el cierre de la cámara, asegúrese de que la posición de inicio es correcta antes de que inserte el quickfit conector.
DE_CAM-LOCK:Achten Sie bei der Montage des Cam-Locks auf die richtige Ausgangsposition, bevor Sie den Quickfit einsetzen.
IT_BLOCCAGGIO A CAMMA:Quando si monta il bloccaggio a camma, assicurarsi che la posizione iniziale sia corretta prima di inserire il montaggio rapido di collegamento.

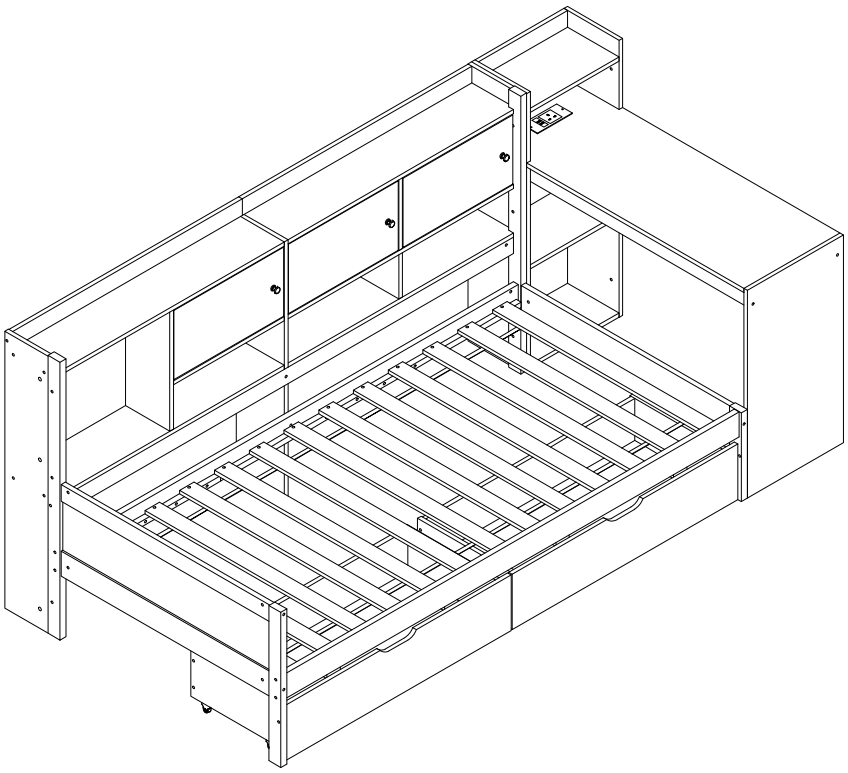


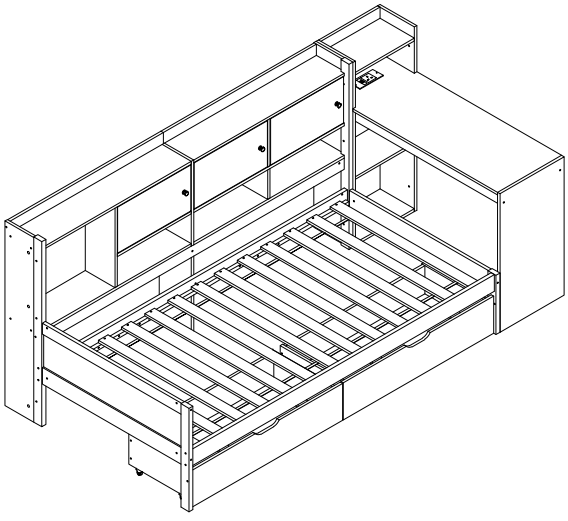
EN_ Quickfit head should be in the centre of the cam lock when the two panels are joined.
Cam lock should be inserted before quickfit.
FR_ Lorsque les deux panneaux sont assemblés, la tête du raccord rapide doit reposer au centre de la serrure batteuse.
Il faut insérer la serrure batteuse avant le raccord rapide.
ES_ El cabezal del quickfit debe estar en el centro del cierre de la cámara cuando se unan los dos paneles.
Se debe insertar el cierre de la cámara antes que el quickfit.
DE_ Der Quickfit-Kopf sollte sich in der Mitte des Cam-Locks befinden, wenn die beiden Platten zusammengefügt sind.
Der Cam-Lock sollte vor dem Quickfit eingesetzt werden.
IT_ La testa del montaggio rapido deve trovarsi al centro del bloccaggio a camma quando i due pannelli sono uniti.
Il Bloccaggio a Camma deve essere inserito prima del montaggio rapido.



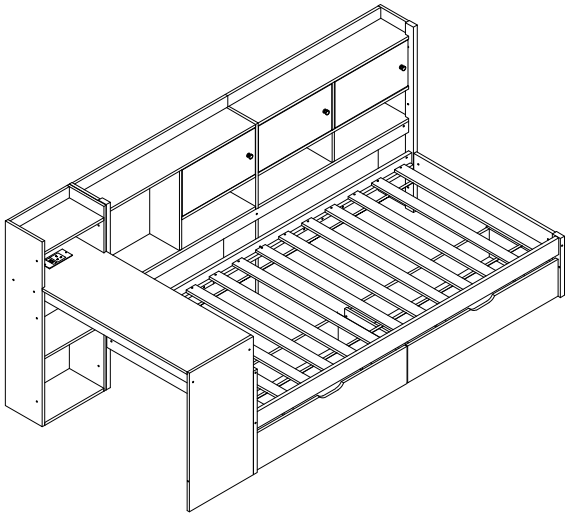
EN_ Turn cam lock clockwise to tighten.
FR_ Faites tourner la serrure batteuse dans le sens des aiguilles d'une montre pour la resserrer.
ES_ Gire el cierre de la cámara en sentido horario para apretarlo.
DE_ Drehen Sie den Cam-Lock im Uhrzeigersinn, um ihn festzuziehen.
IT_ Ruotare il bloccaggio a camma in senso orario per stringere.

ASSEMBLY INSTRUCTIONS



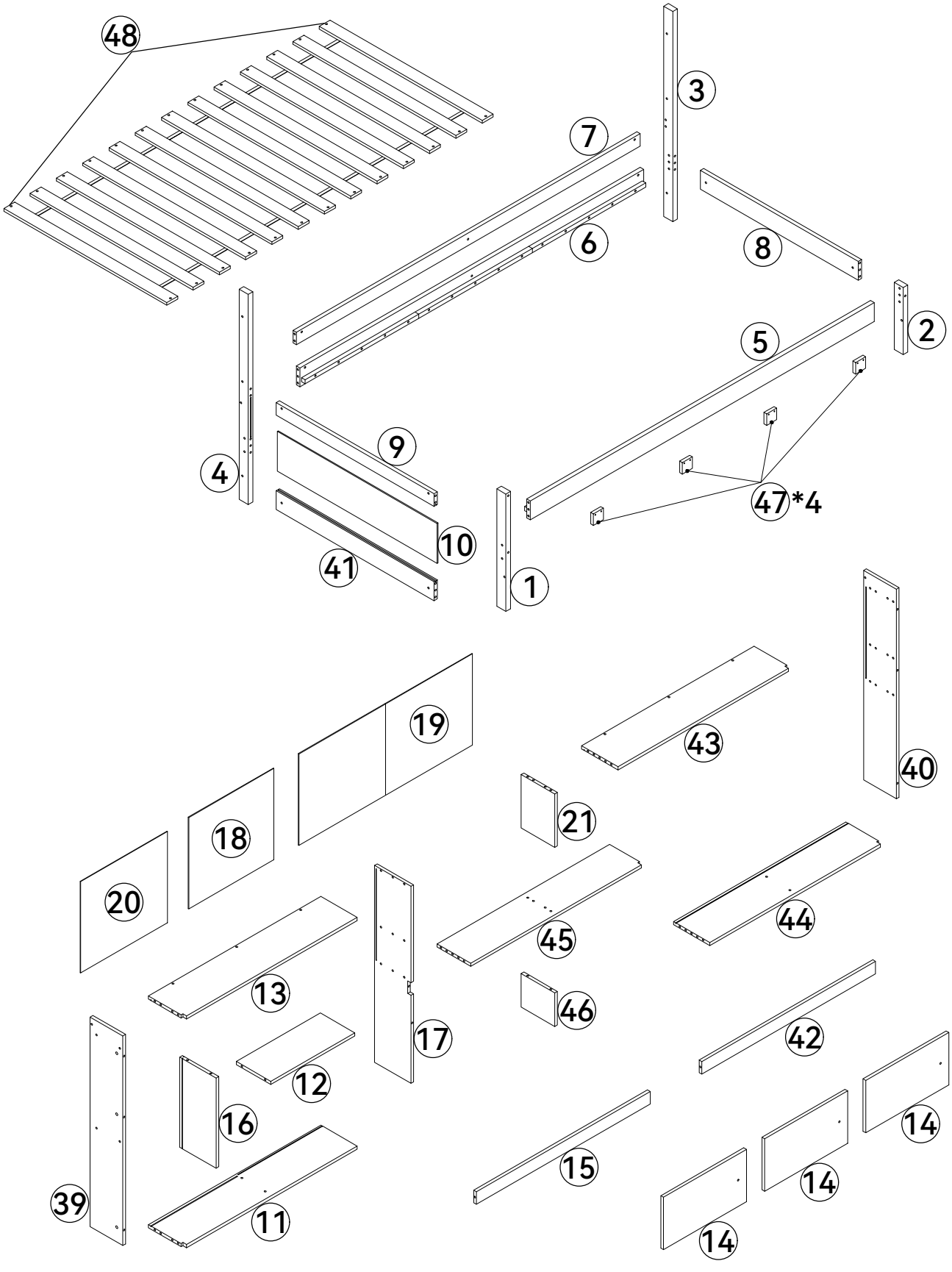


(version1)

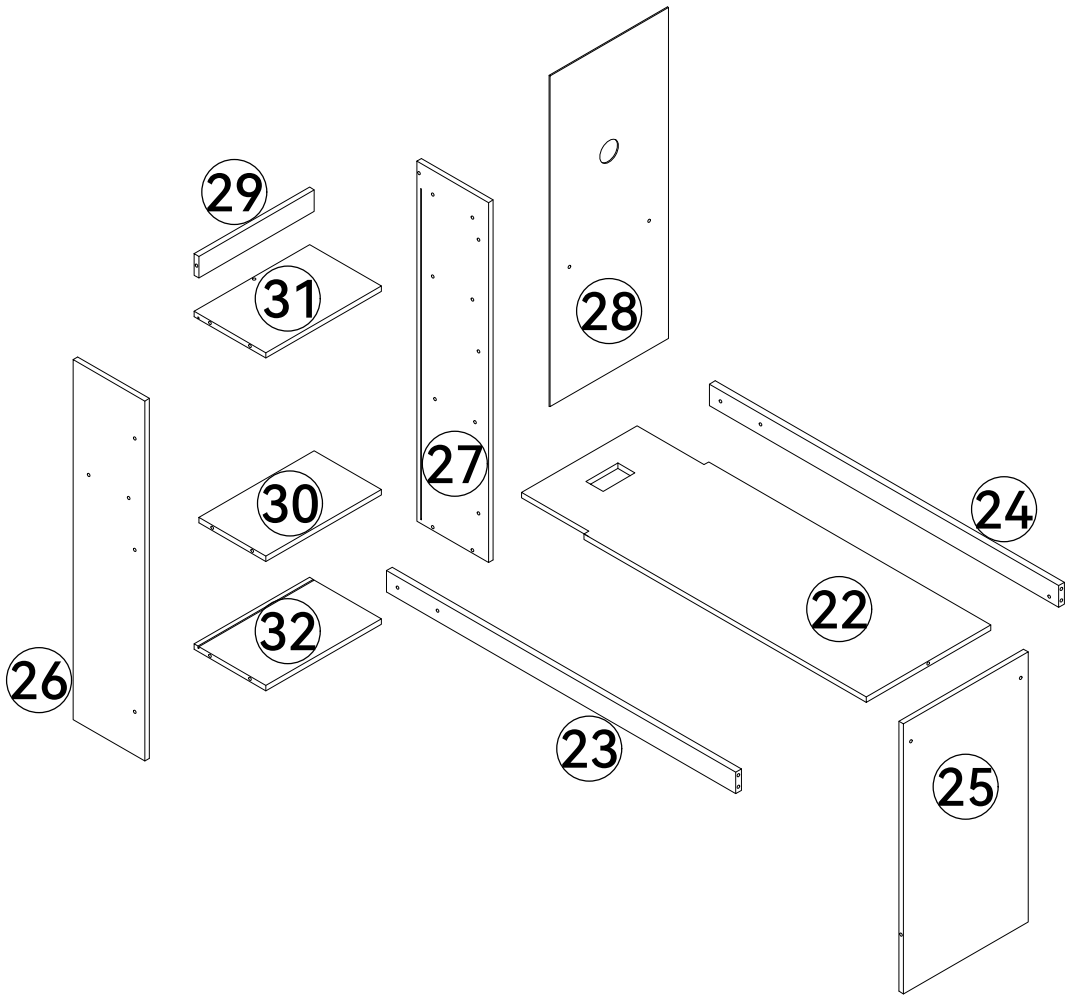


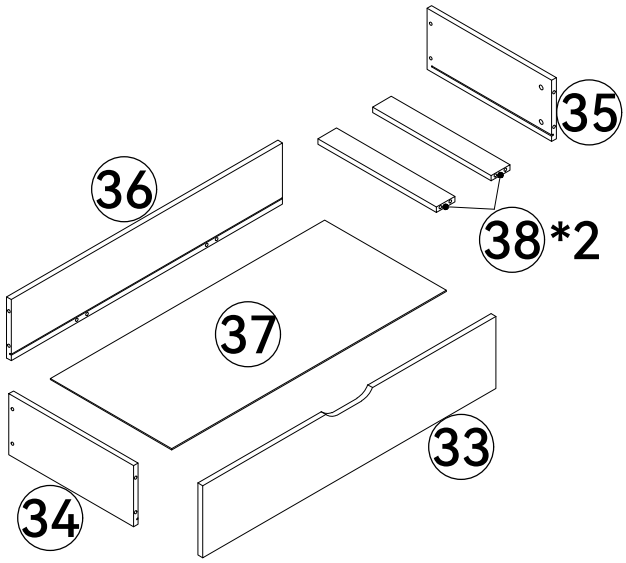
(version2)

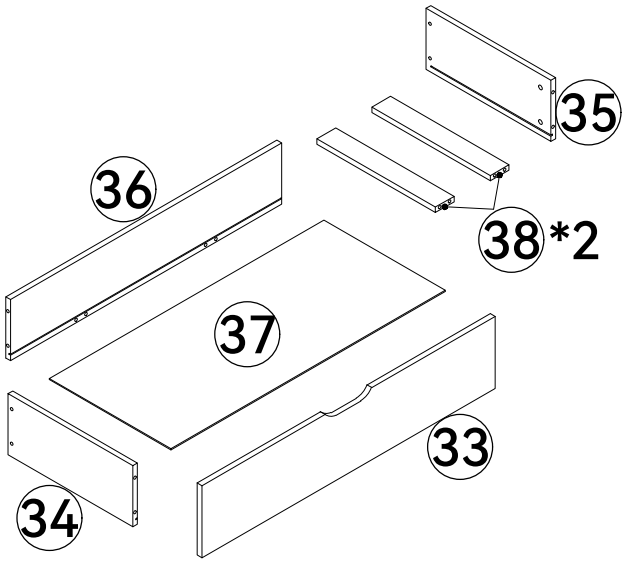
ASSEMBLY INSTRUCTIONS



ASSEMBLY INSTRUCTIONS

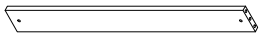
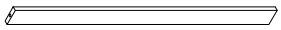
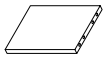
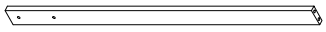
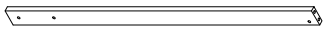


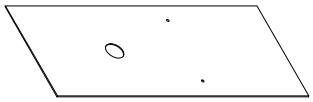
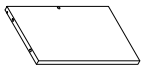
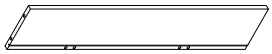
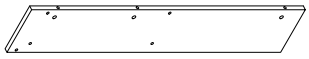
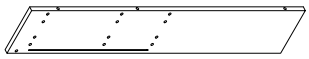




ASSEMBLY INSTRUCTIONS

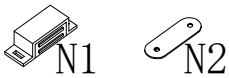
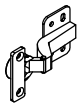
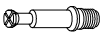
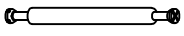
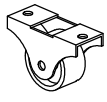
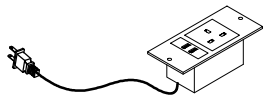
N652P373262

8		1PC
9		1PC
15		1PC
21		1PC
22		1PC
23		1PC
24		1PC
25		1PC

28		1PC
31		1PC
36		2PCS
37		2PCS
39		1PC
40		1PC
41		1PC
42		1PC

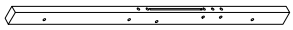
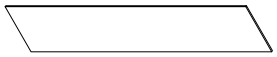
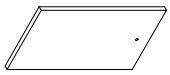
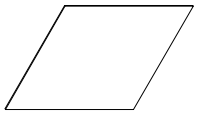
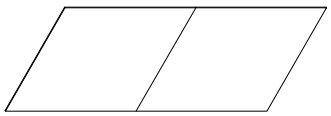
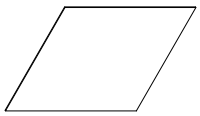
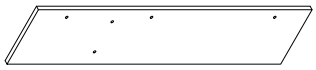
ASSEMBLY INSTRUCTIONS

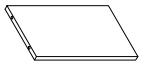
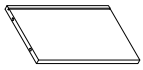
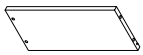
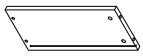
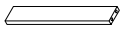
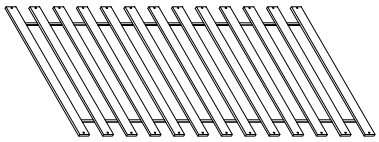
N652P373262

A	6x90		6PCS	N			3PCS
B	6x60		12PCS	O			6PCS
C			32PCS	P	3x14		92PCS
D	Ø8x30		45PCS	Q			6PCS
E	6x20		7PCS	R	4x30		34PCS
F	6x25		7PCS	S	M4		2PCS
G	7x50		15PCS	T			2PCS
H			59PCS	U			1PC
I			63PCS	V			2PCS
J			3PCS	W			2PCS
K			2PCS	X			8PCS
L	Ø8x40		3PCS	Y			1PC
M	6x50		14PCS	Z			13PCS

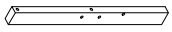
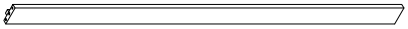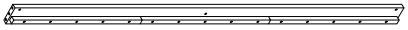
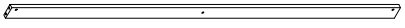
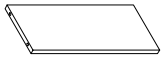
ASSEMBLY INSTRUCTIONS

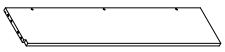
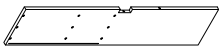
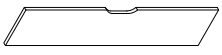
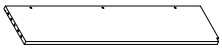
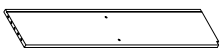
N652P373263

2		1PC
4		1PC
10		1PC
14		3PCS
18		1PC
19		1PC
20		1PC
26		1PC

27		1PC
29		1PC
30		1PC
32		1PC
34		2PCS
35		2PCS
38		4PCS
45		1PC
46		1PC
48		1PC

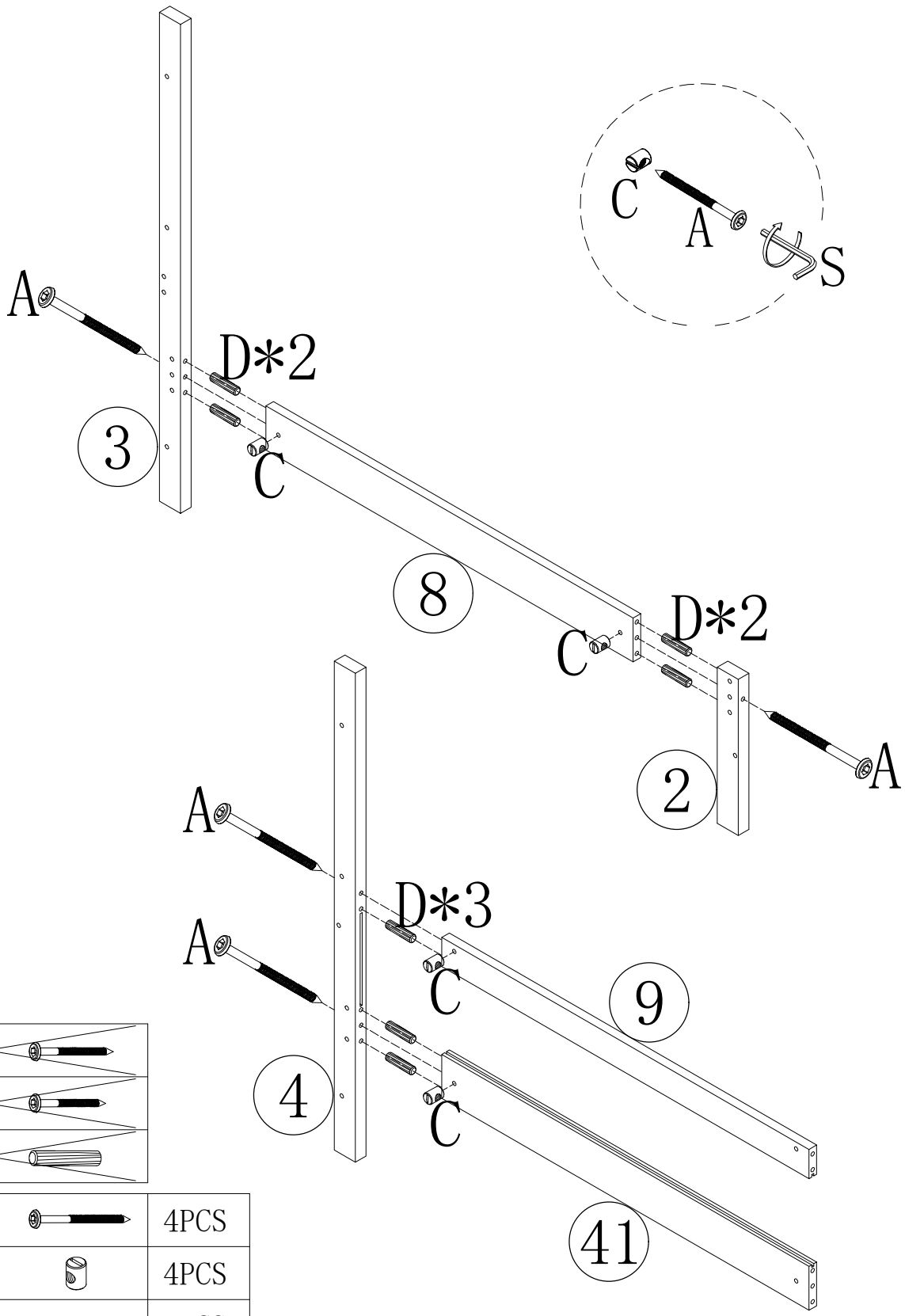
N652P373264

1		1PC
3		1PC
5		1PC
6		1PC
7		1PC
11		1PC
12		1PC

13		1PC
16		1PC
17		1PC
33		2PCS
43		1PC
44		1PC
47		4PCS

ASSEMBLY INSTRUCTIONS

1

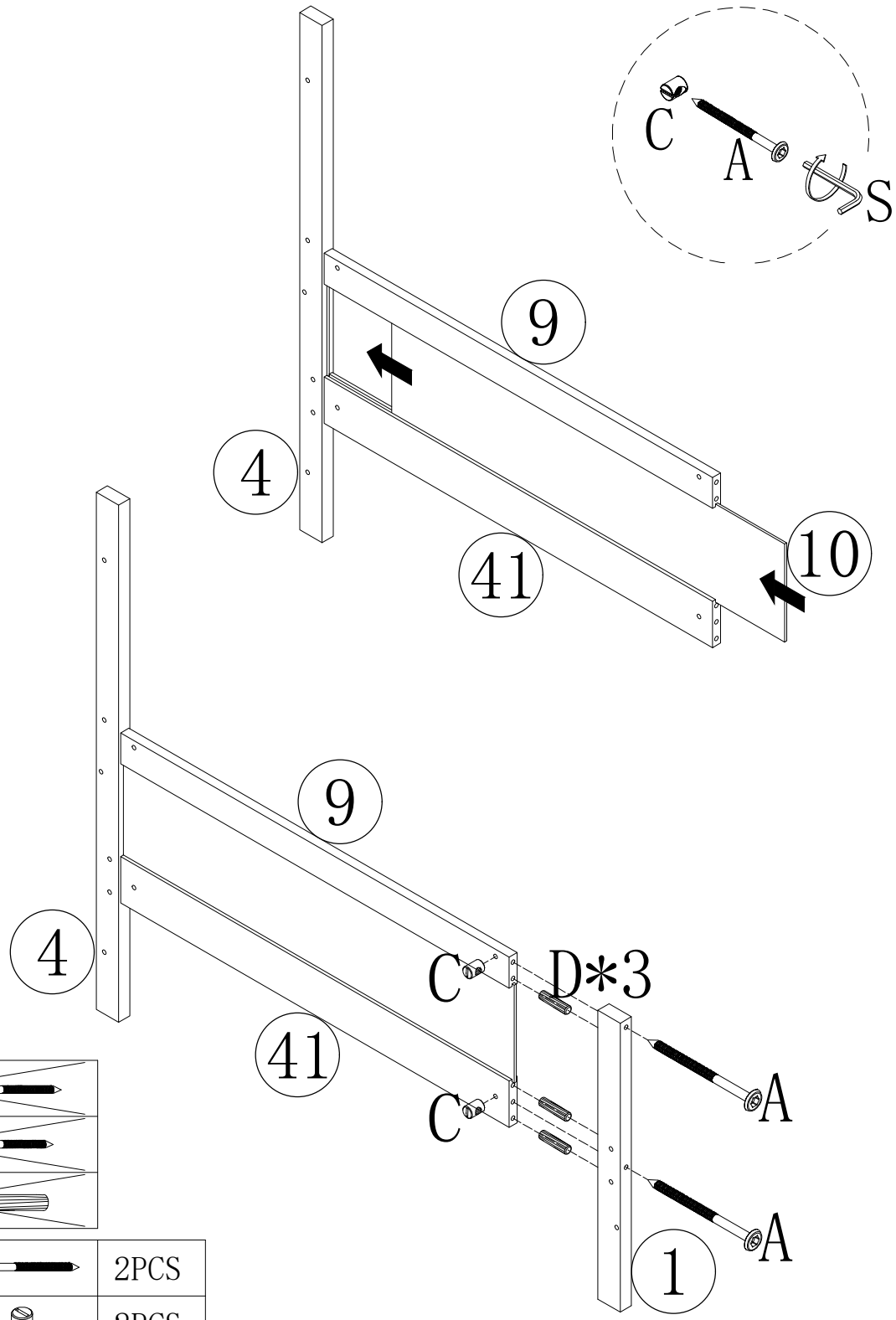


B	6x60	
M	6x50	
L	Ø8x40	

A	6x90	4PCS
C		4PCS
D	Ø8x30	7PCS
S	M4	1PC

ASSEMBLY INSTRUCTIONS

2

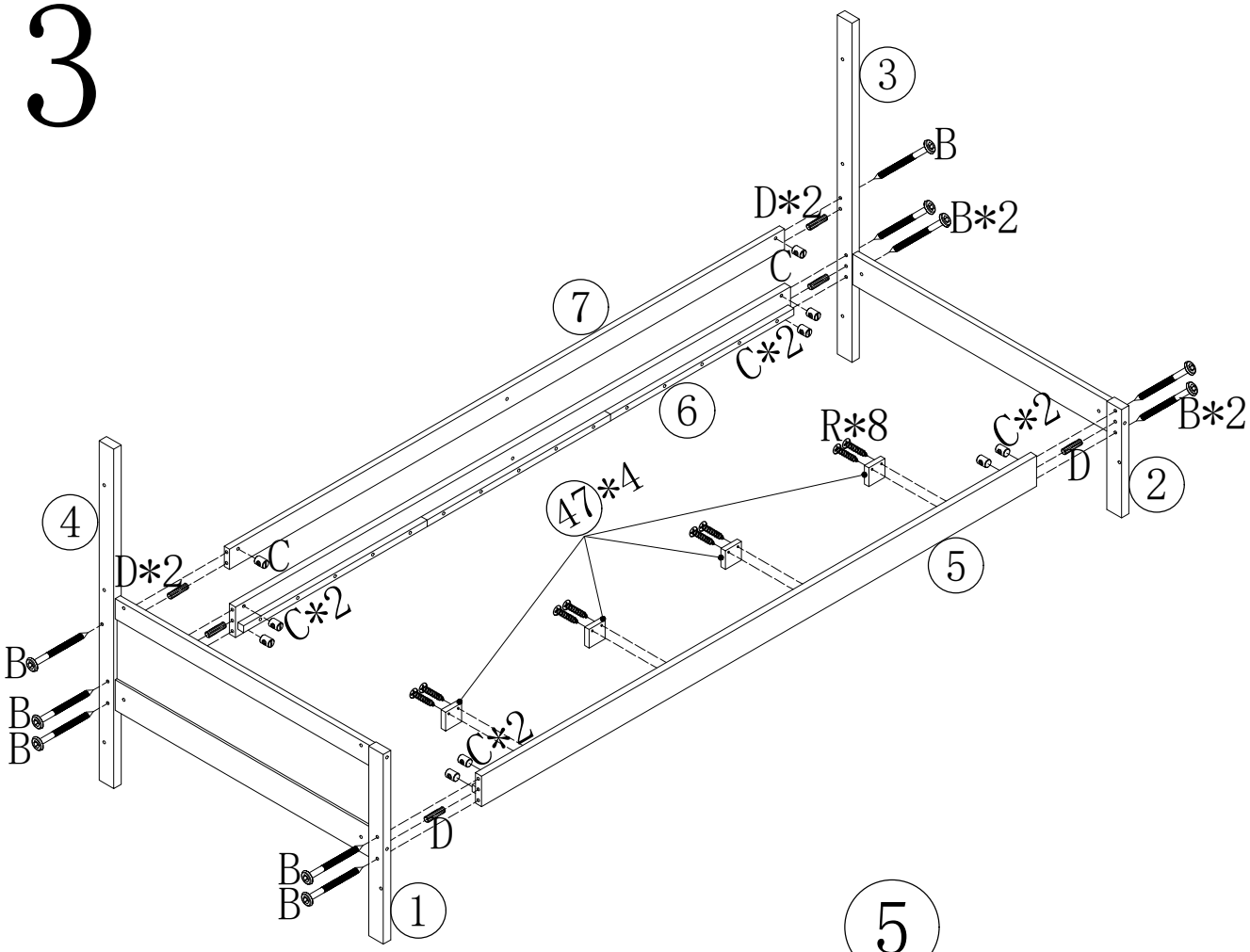


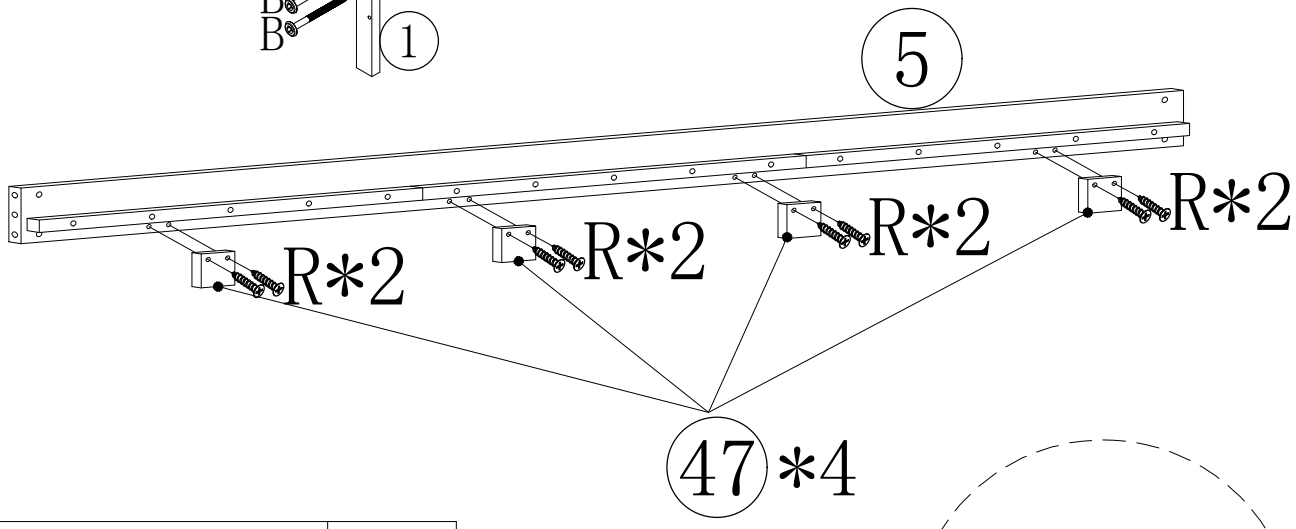
B	6x60	
M	6x50	
L	Ø8x40	

A	6x90	2PCS
C		2PCS
D	Ø8x30	3PCS
S	M4	1PC

ASSEMBLY INSTRUCTIONS

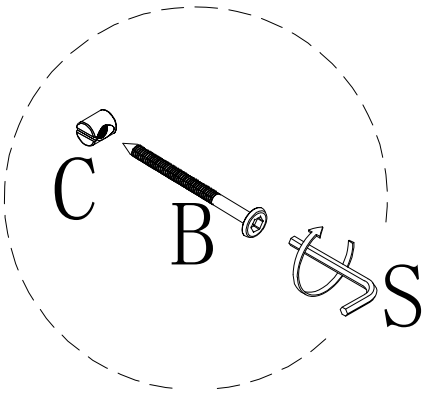
3



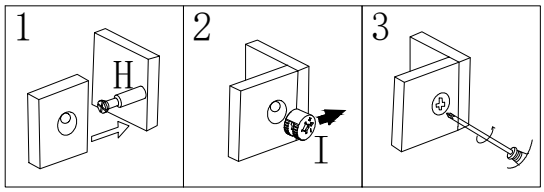


B	6x60	10PCS
C		10PCS
D	Ø8x30	6PCS
R	4x30	8PCS
S	M4	1PC

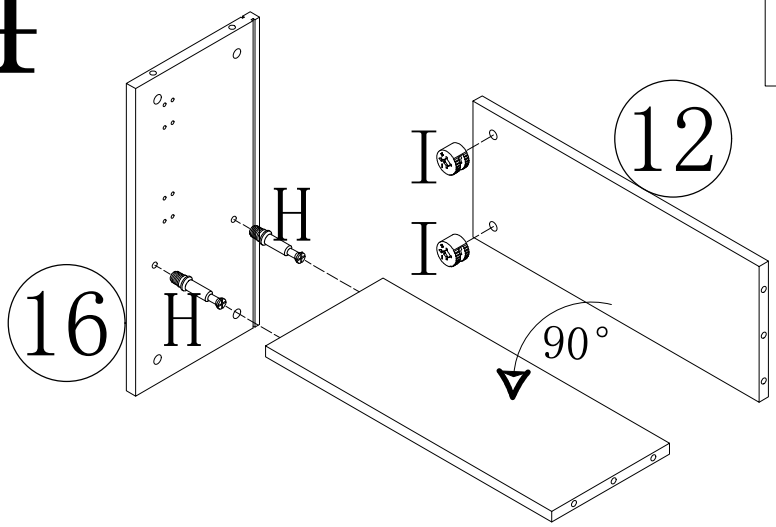
A	6x90
M	6x50
L	Ø8x40

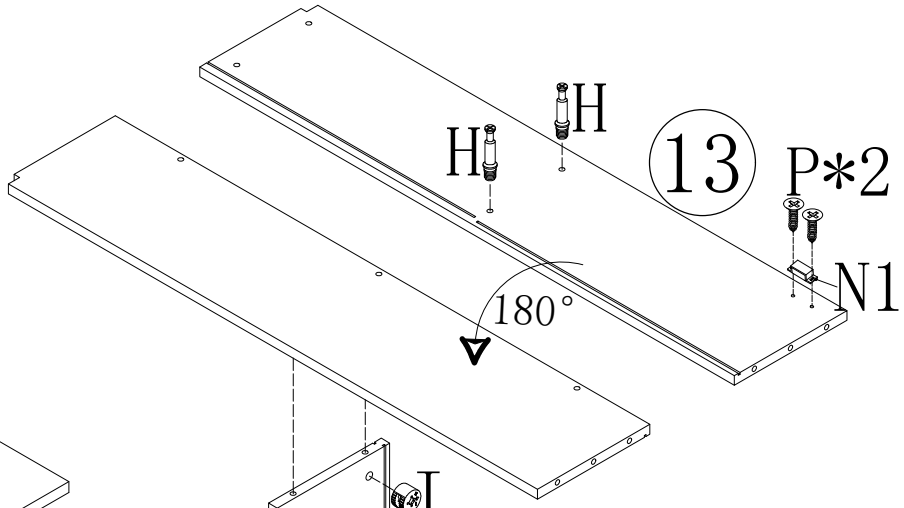


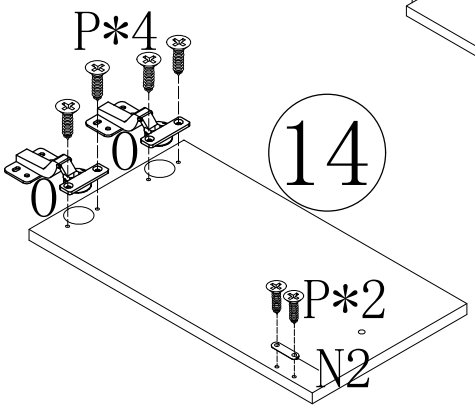
ASSEMBLY INSTRUCTIONS

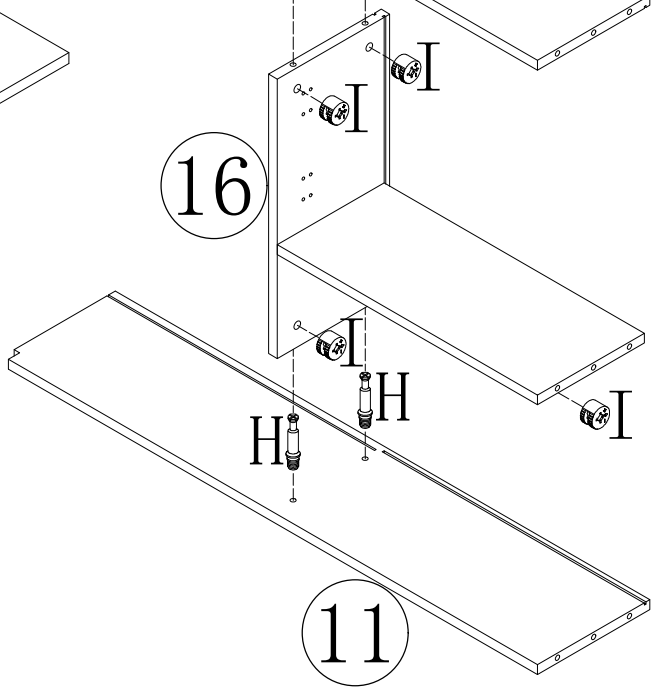


4





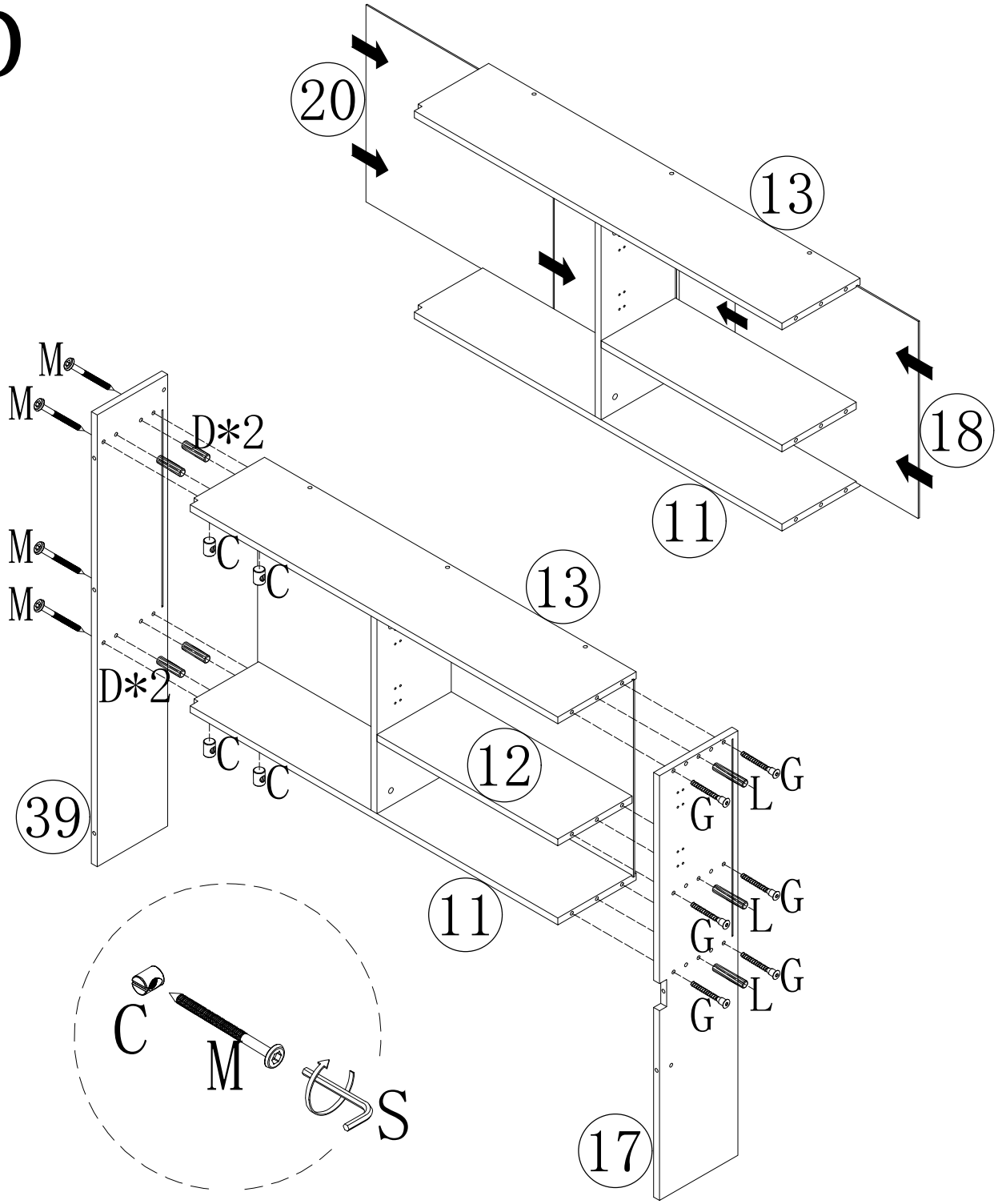




H		6PCS
I		6PCS
N	N1 N2	1PC
O		2PCS
P	3x14	8PCS

ASSEMBLY INSTRUCTIONS

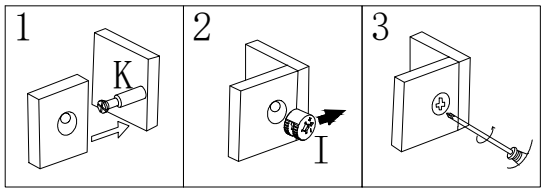
5

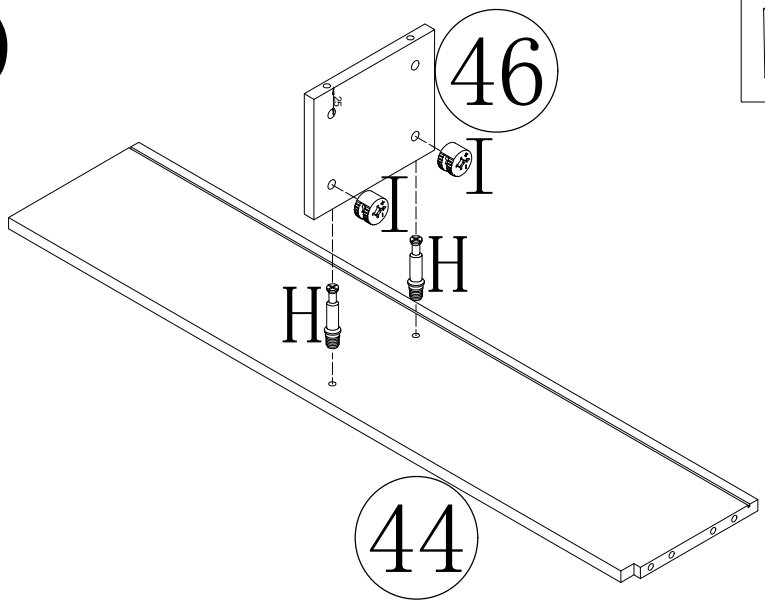


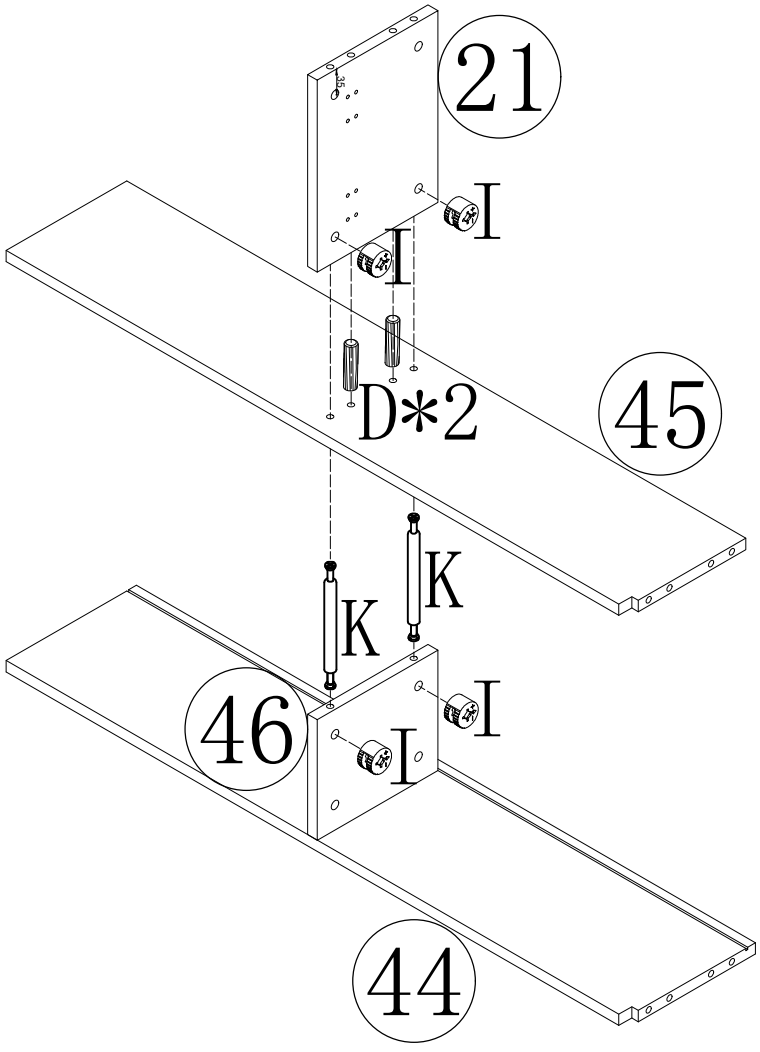
A	~~6x90~~		B	~~6x60~~				
M	6x50	4PCS	C		4PCS	D	Ø8x30	4PCS
G	7x50	6PCS	L	Ø8x40	3PCS	S	M4	1PC

ASSEMBLY INSTRUCTIONS

6



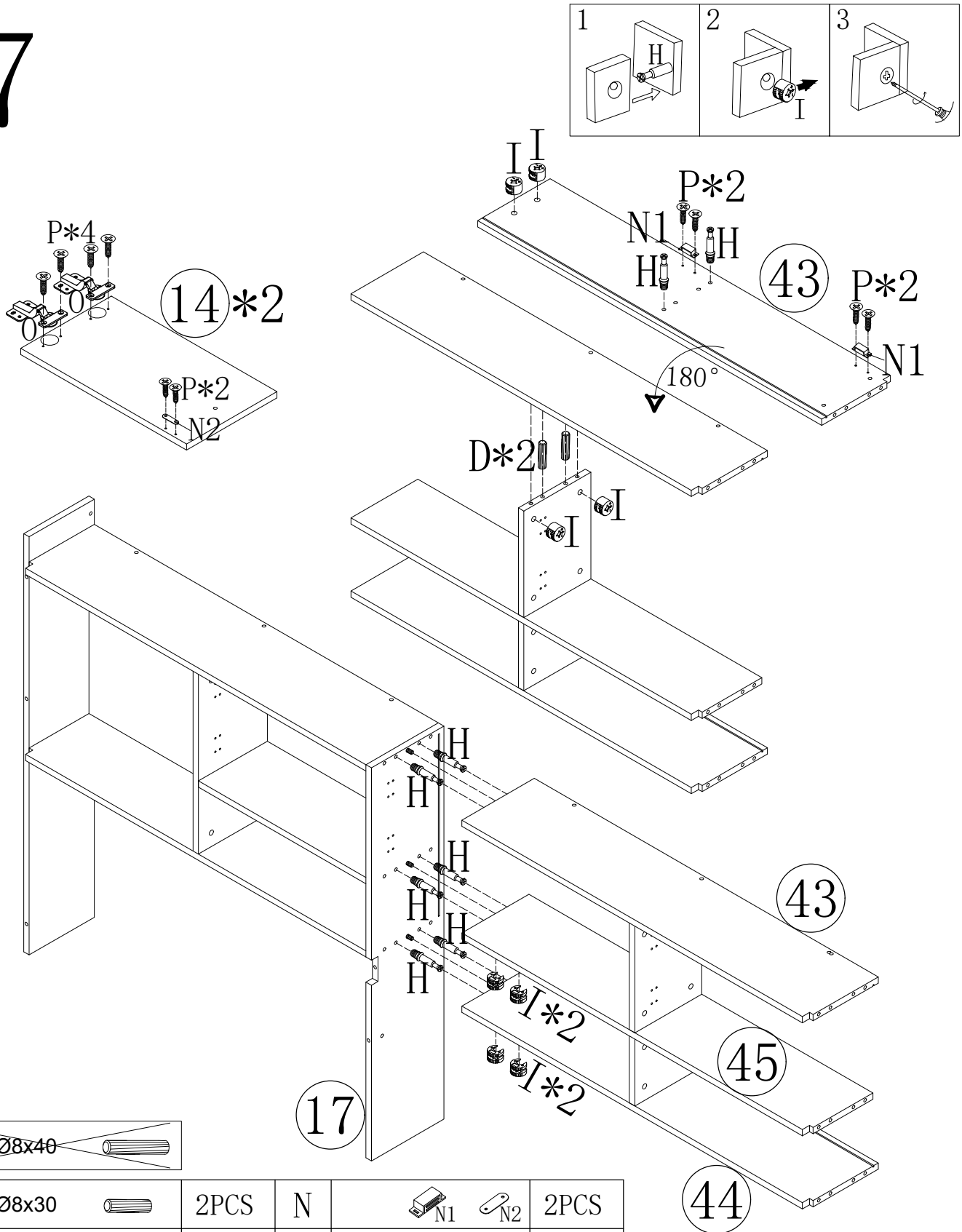




L	~~Ø8x40~~	
D	Ø8x30	2PCS
H		2PCS
I		6PCS
K		2PCS

ASSEMBLY INSTRUCTIONS

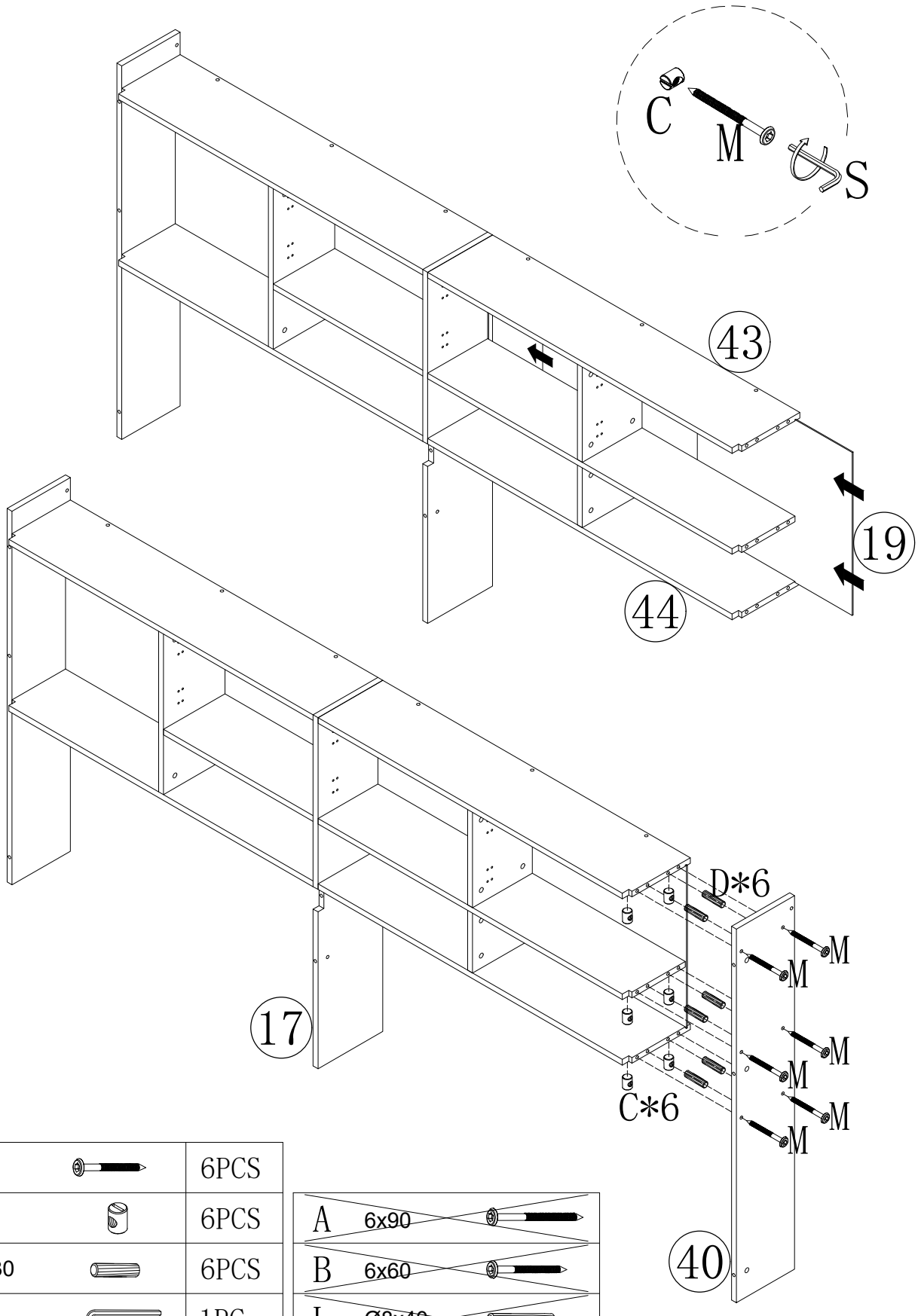
7



L	~~Ø8x40~~				
D	Ø8x30	2PCS	N	N1 N2	2PCS
H		8PCS	O		4PCS
I		8PCS	P	3x14	16PCS

ASSEMBLY INSTRUCTIONS

8

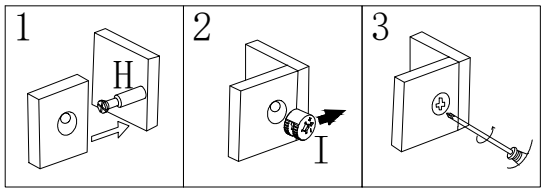


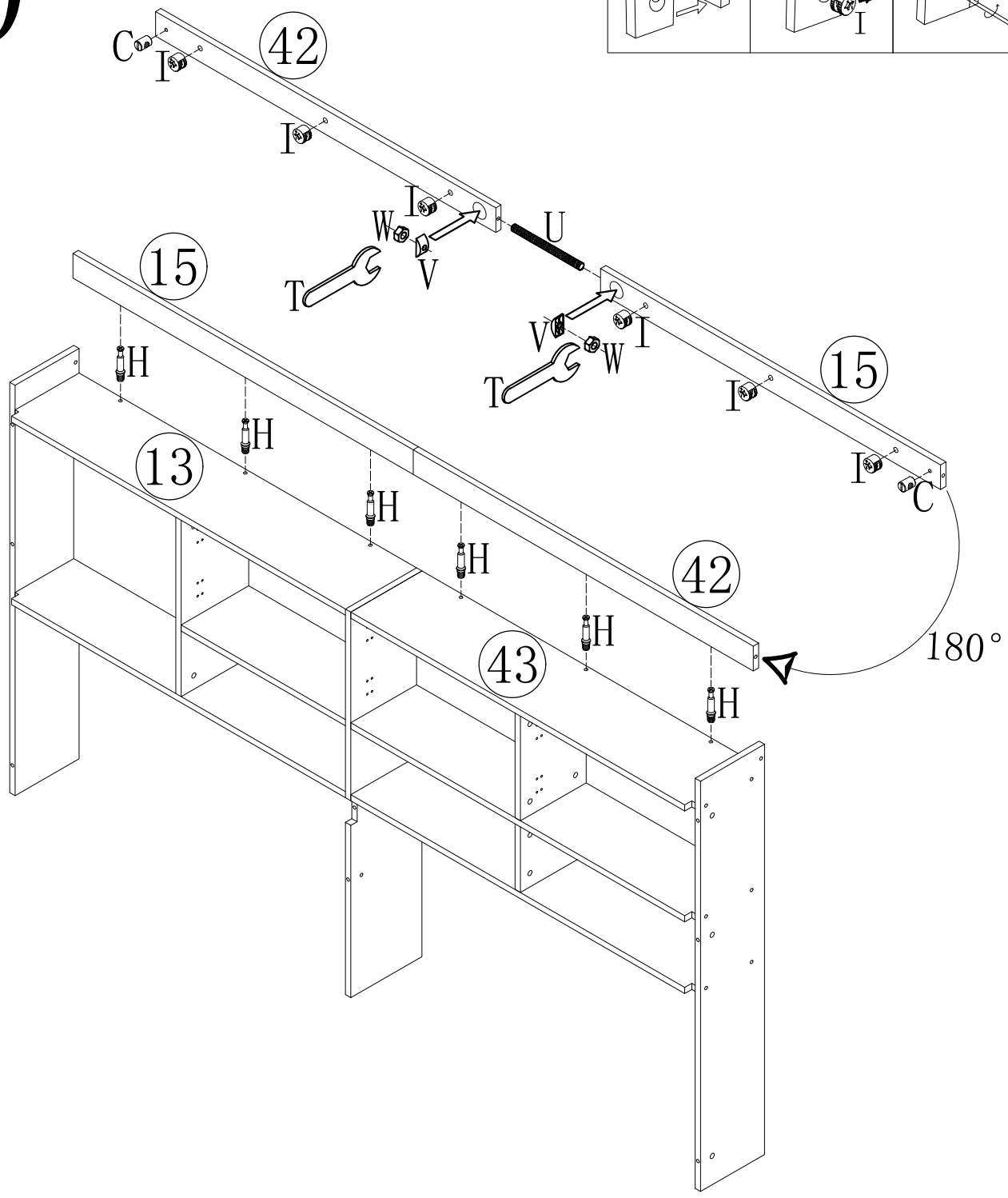
M	6x50	6PCS
C		6PCS
D	Ø8x30	6PCS
S	M4	1PC

A	6x90
B	6x60
L	Ø8x40

ASSEMBLY INSTRUCTIONS

9

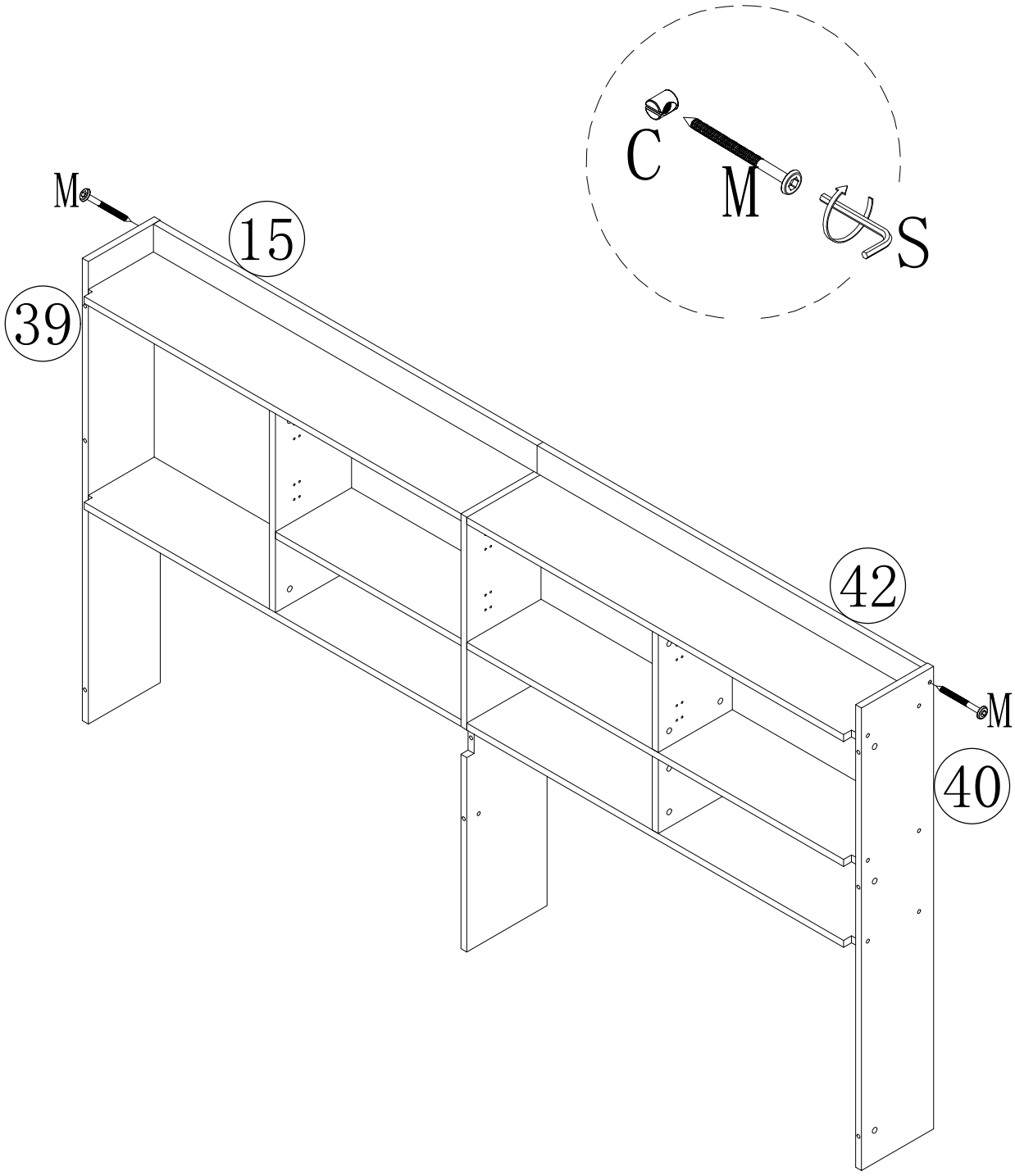




C		2PCS						
H		6PCS	I		6PCS	T		2PCS
U		1PC	V		2PCS	W		2PCS

ASSEMBLY INSTRUCTIONS

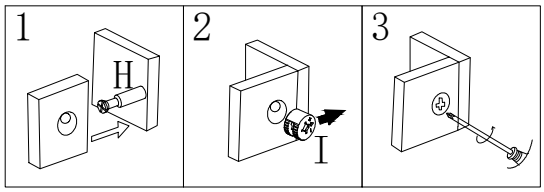
10

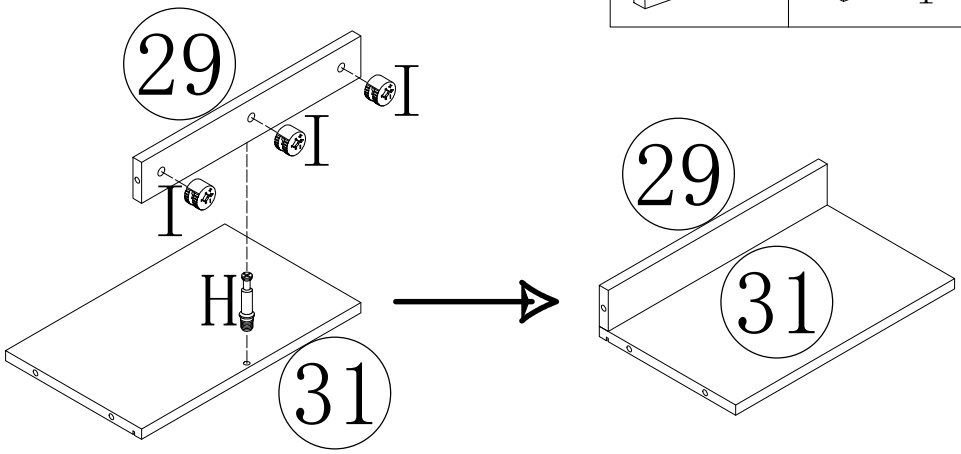


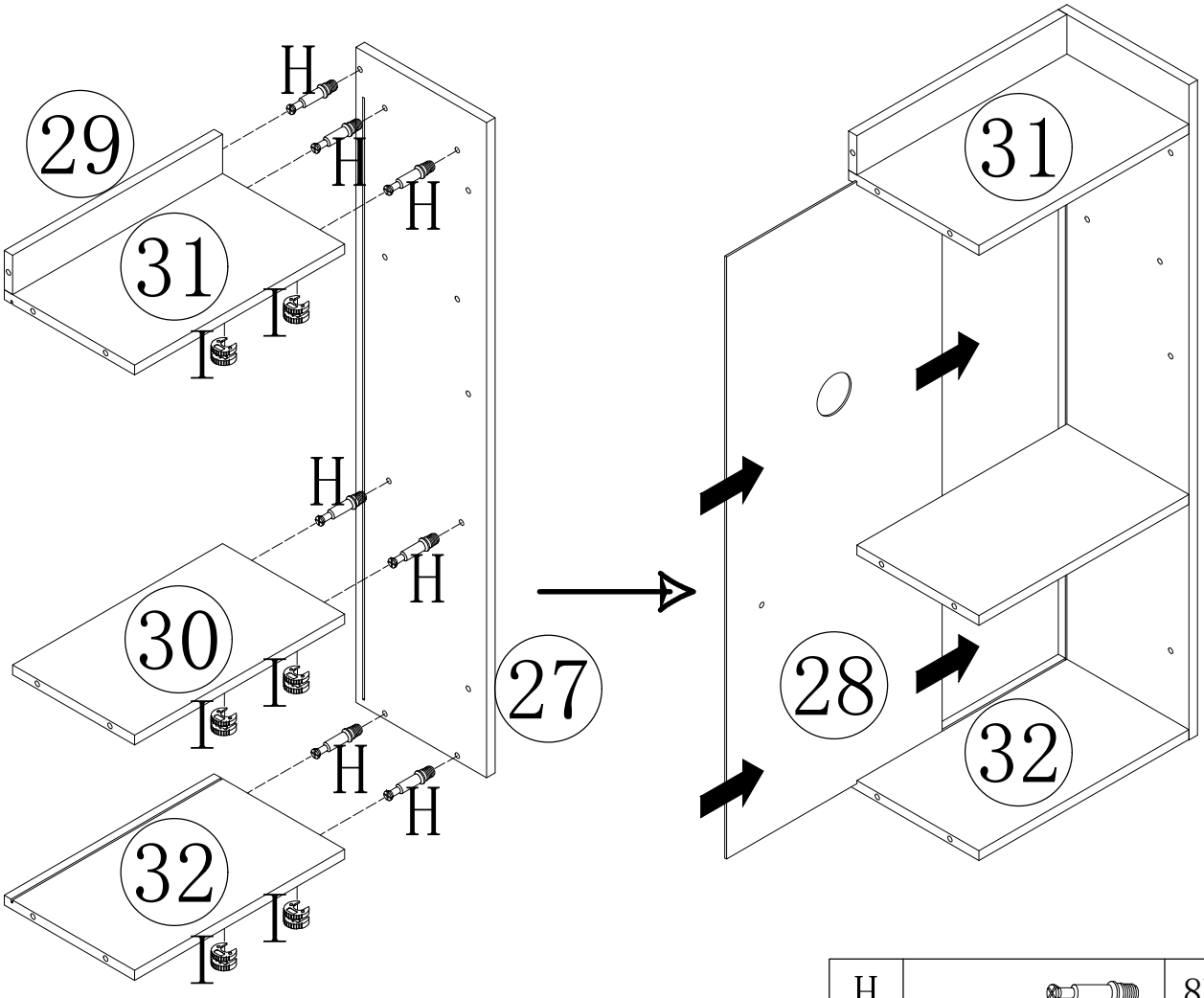
M	6x50		2PCS	A	6x90	B	6x60

ASSEMBLY INSTRUCTIONS

11



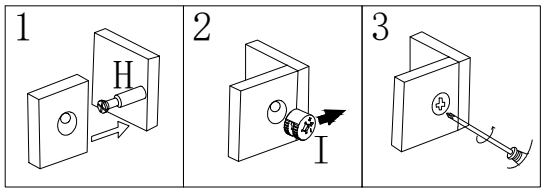


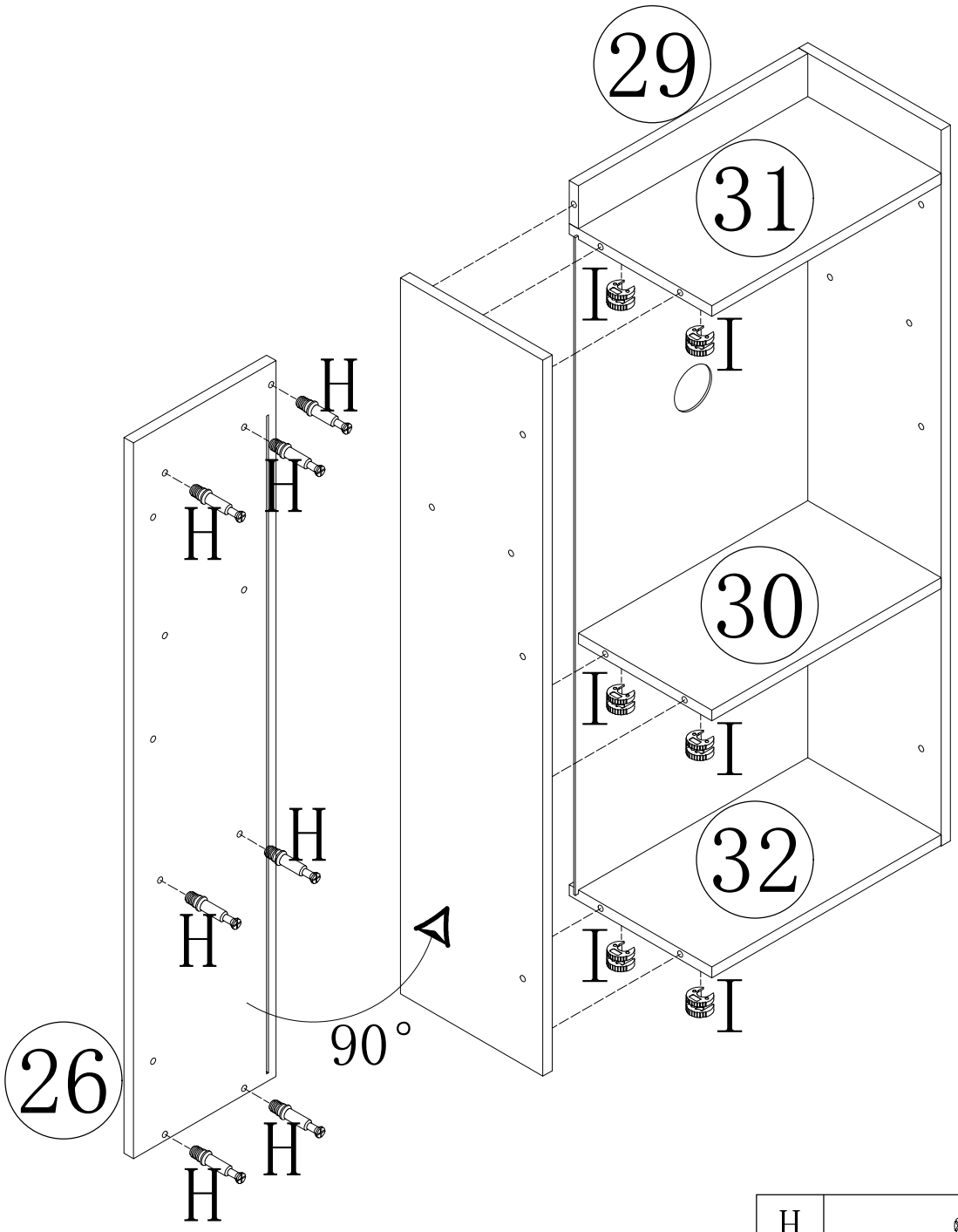


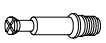
H		8PCS
I		9PCS

ASSEMBLY INSTRUCTIONS

12

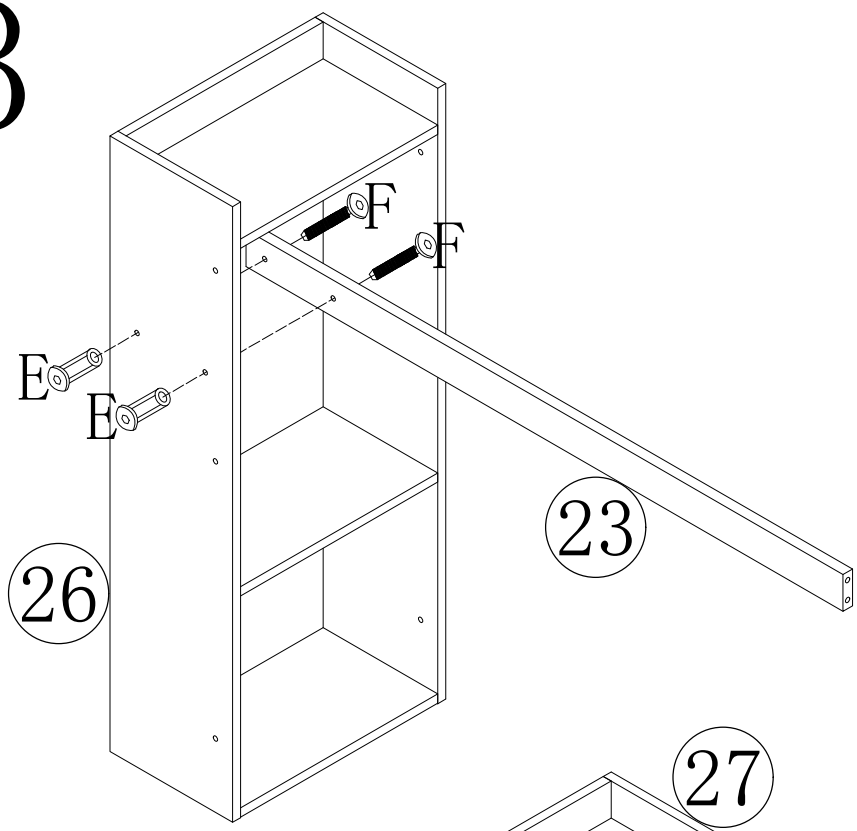


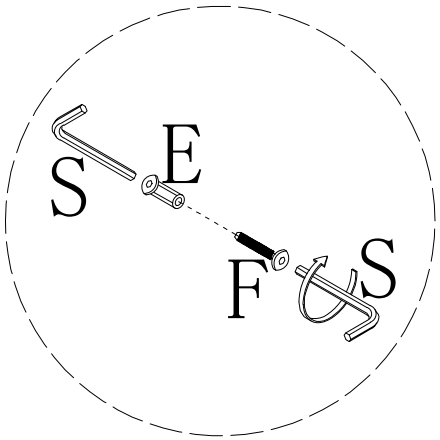


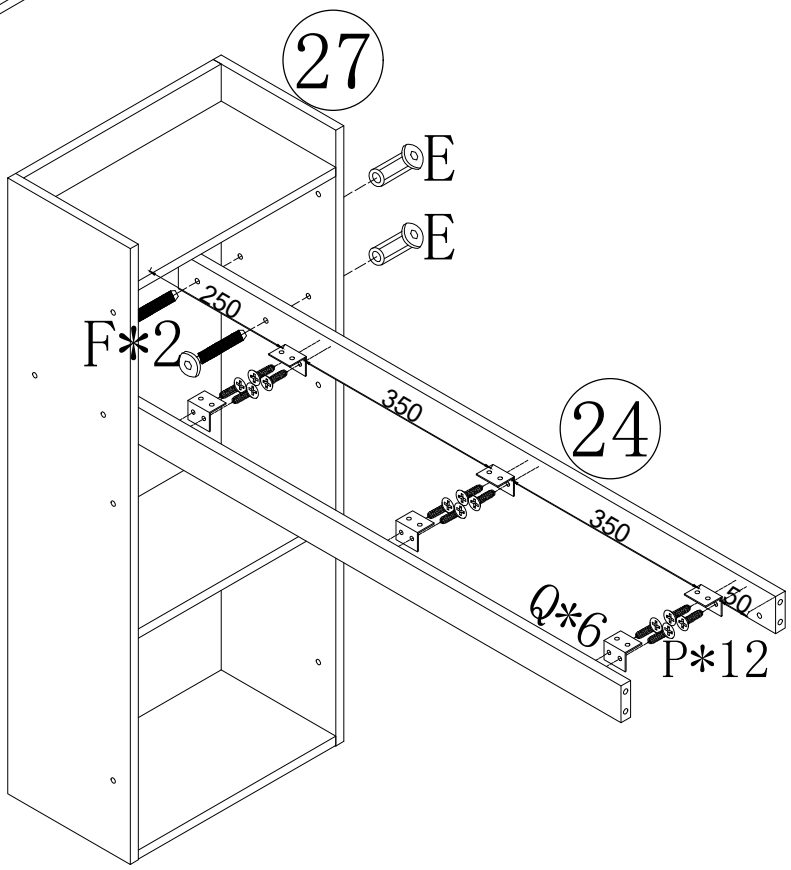
H		7PCS
I		6PCS

ASSEMBLY INSTRUCTIONS

13



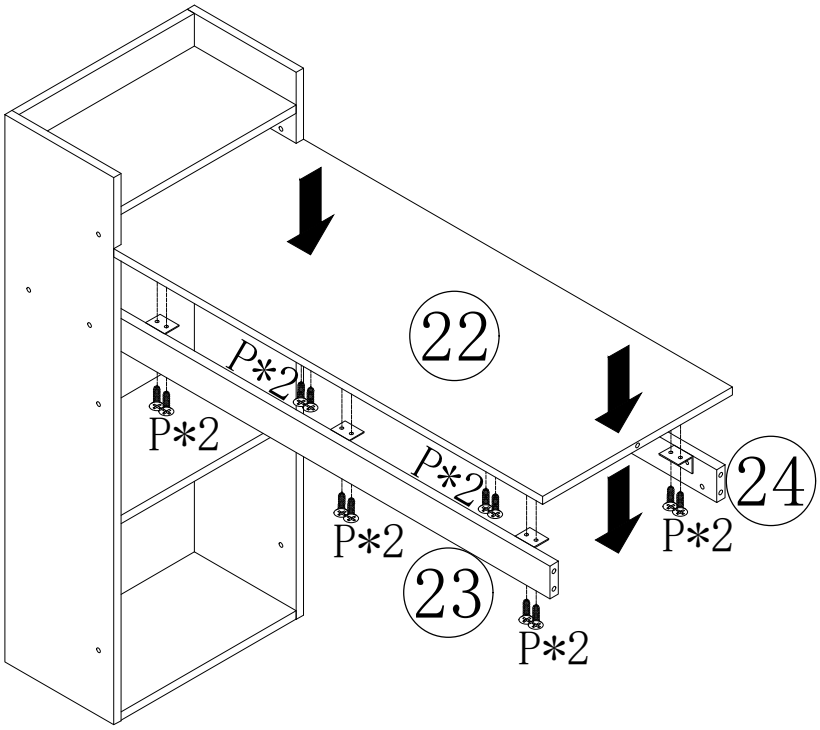


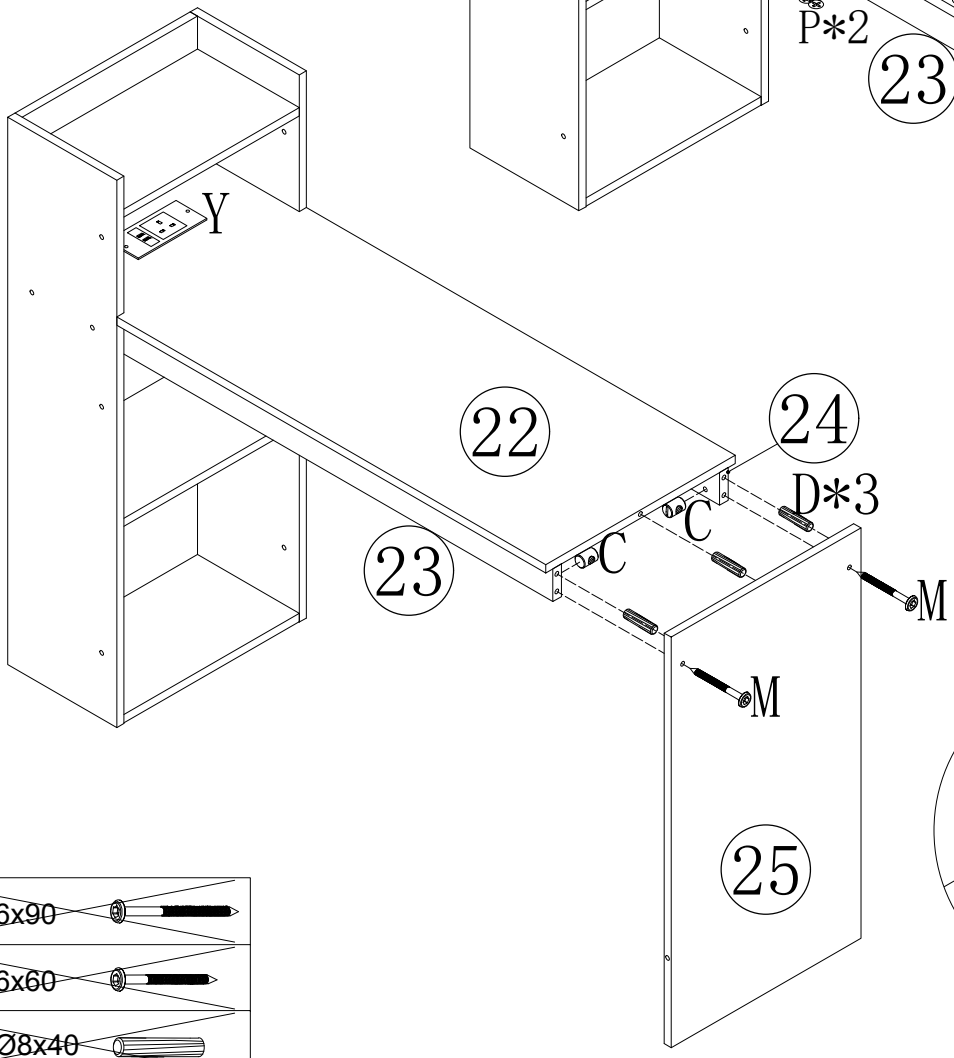


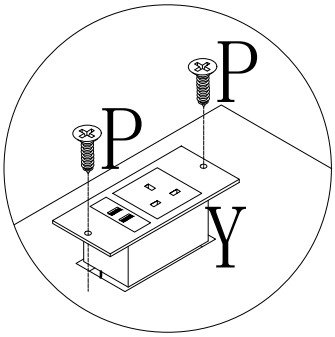
E	6x20	4PCS	F	6x25	4PCS			
P	3x14	12PCS	Q		6PCS	S	M4	2PCS

ASSEMBLY INSTRUCTIONS

14





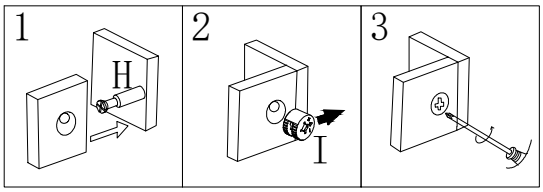


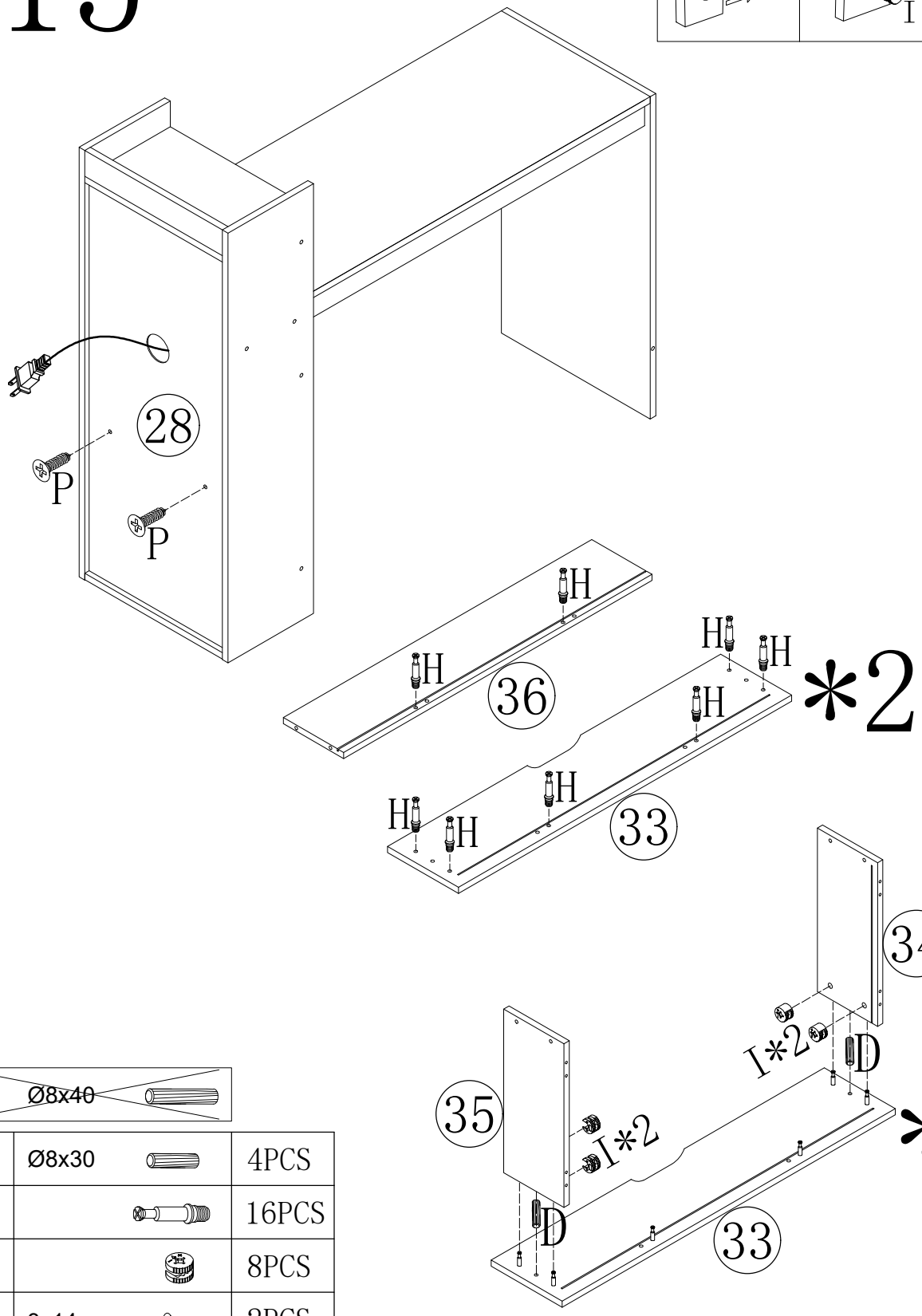
A	~~6x90~~							
B	~~6x60~~							
L	~~Ø8x40~~							

M	6x50	2PCS	C		2PCS	D	Ø8x30	3PCS
P	3x14	14PCS	Y		1PC	S	M4	1PC

ASSEMBLY INSTRUCTIONS

15

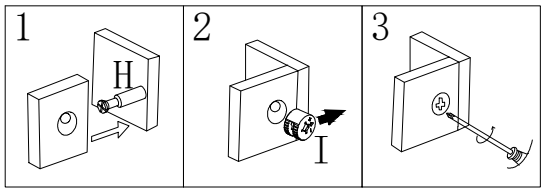


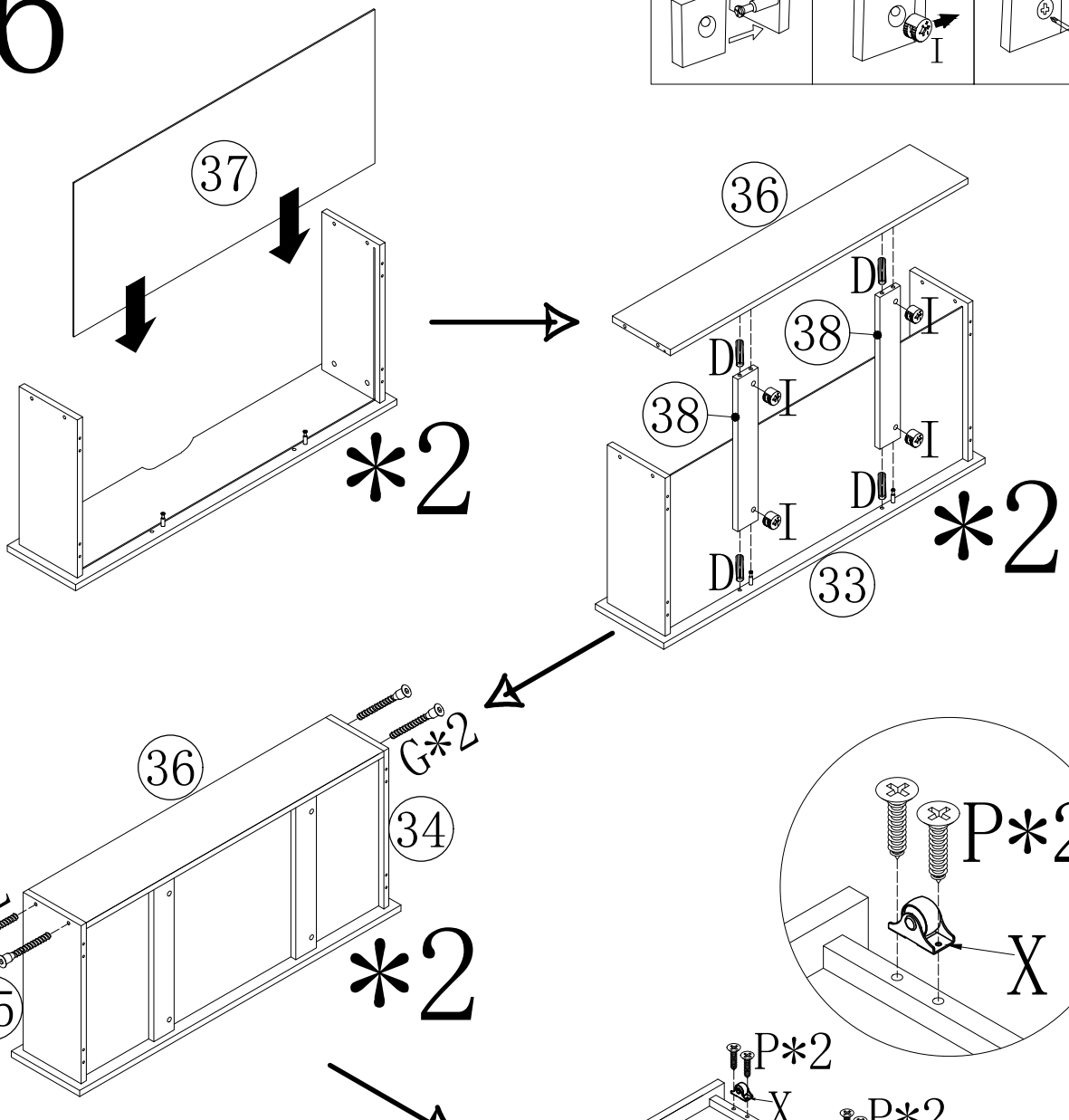


~~L~~	~~Ø8x40~~	
D	Ø8x30	4PCS
H		16PCS
I		8PCS
P	3x14	2PCS

ASSEMBLY INSTRUCTIONS

16

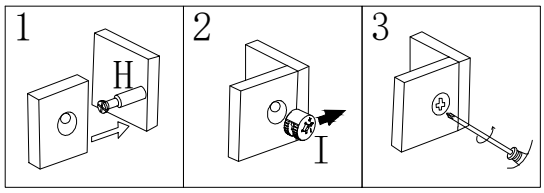


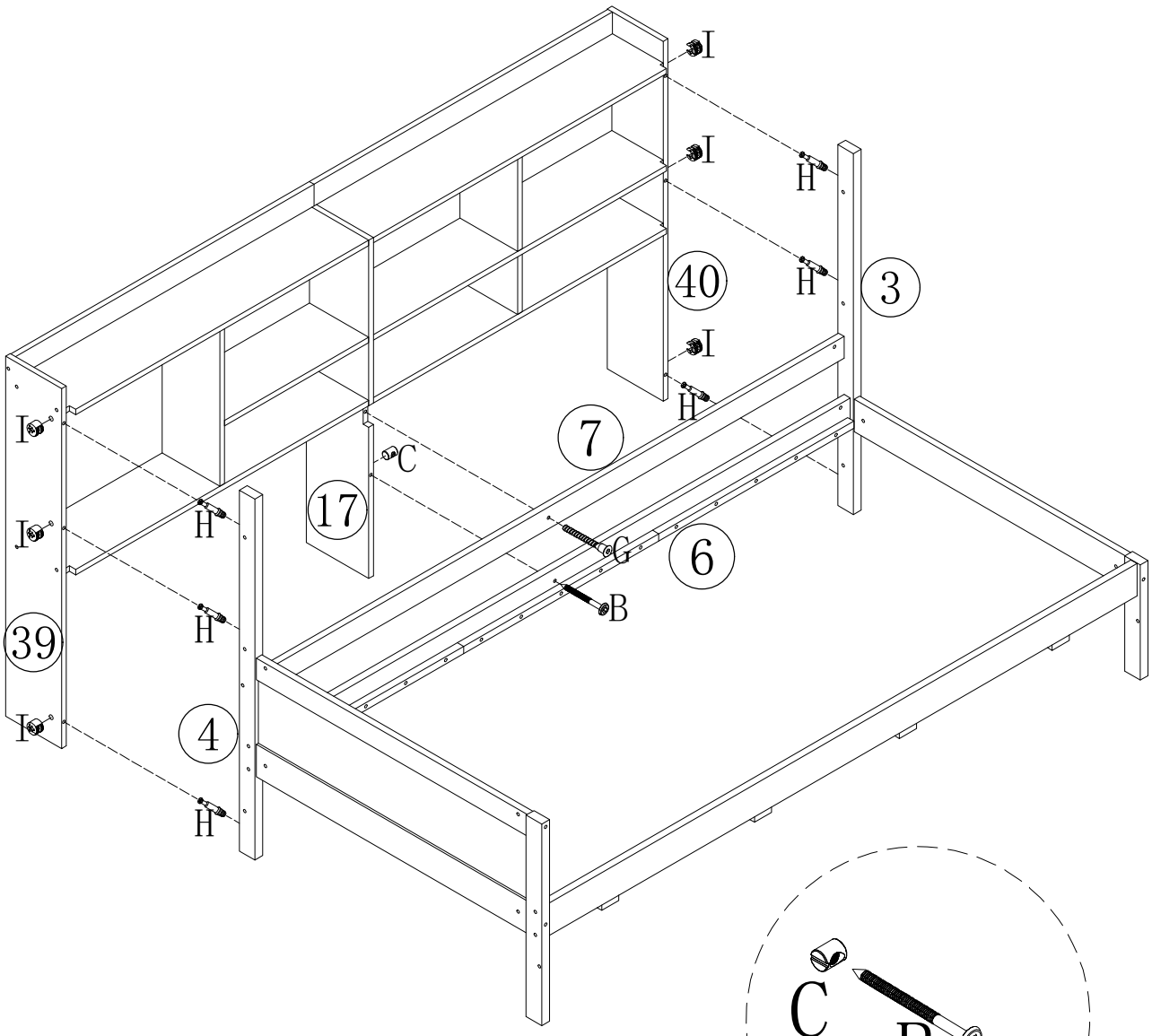


~~L~~	~~Ø8x40~~	
D	Ø8x30	8PCS
I		8PCS
G	7x50	8PCS
P	3x14	16PCS
X		8PCS
S	M4	1PC

ASSEMBLY INSTRUCTIONS

17

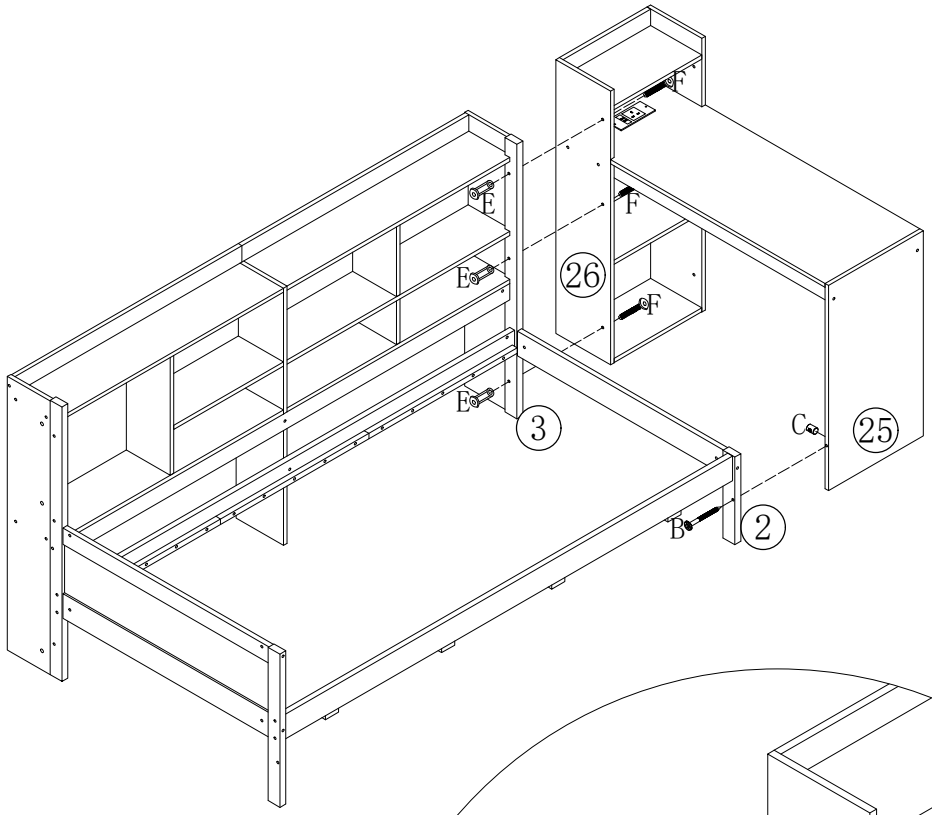


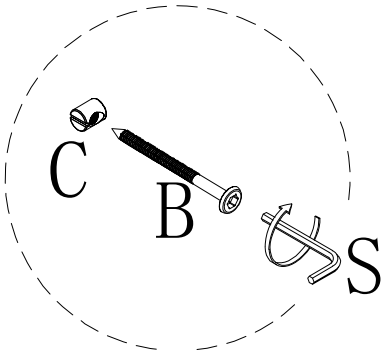


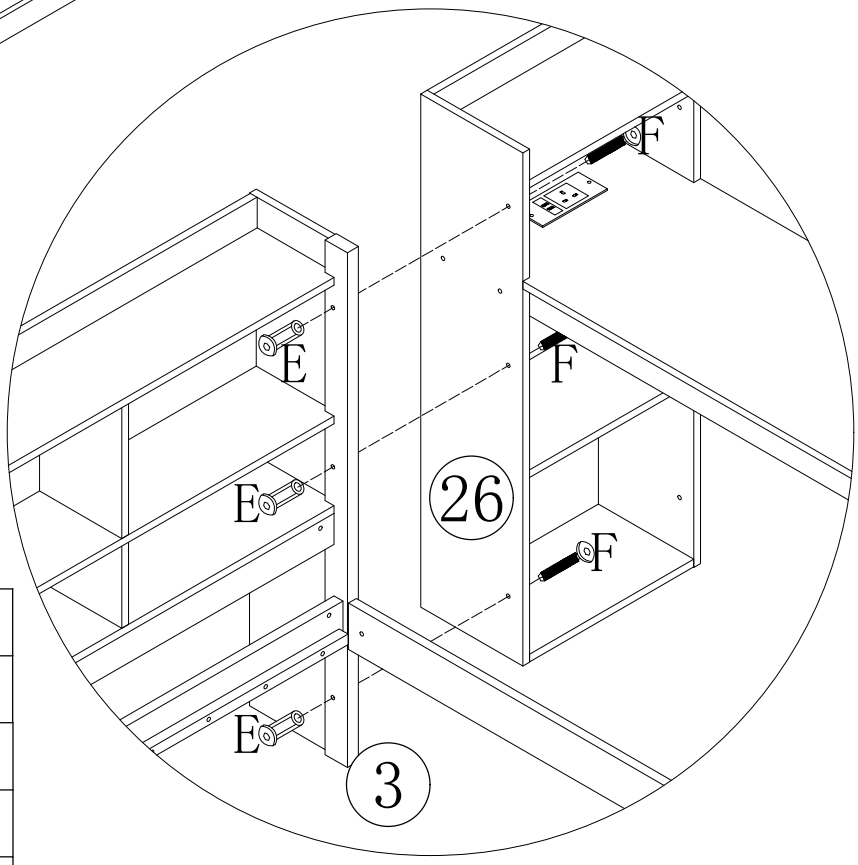
~~A~~	~~6x90~~		~~M~~	~~6x50~~				
B	6x60	1PC	C		1PC	G	7x50	1PC
H		6PCS	I		6PCS	S	M4	1PC

ASSEMBLY INSTRUCTIONS

18(version1)



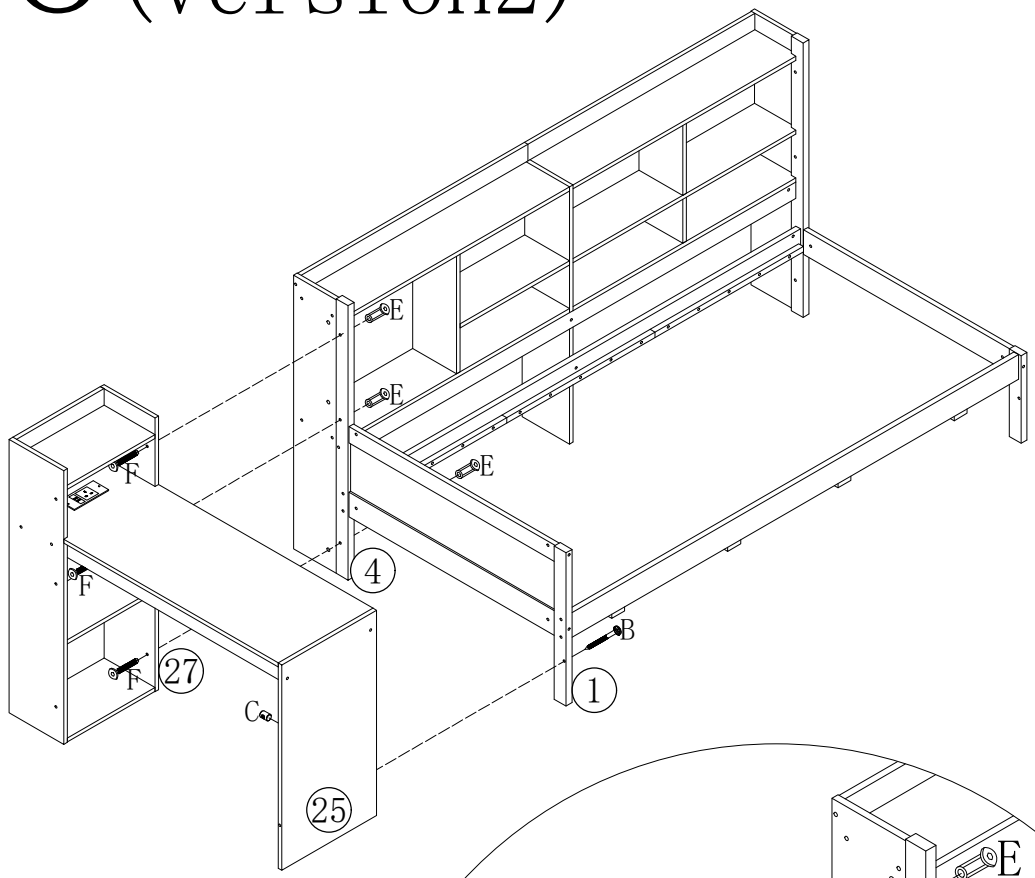


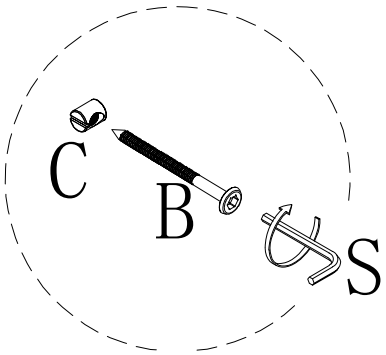


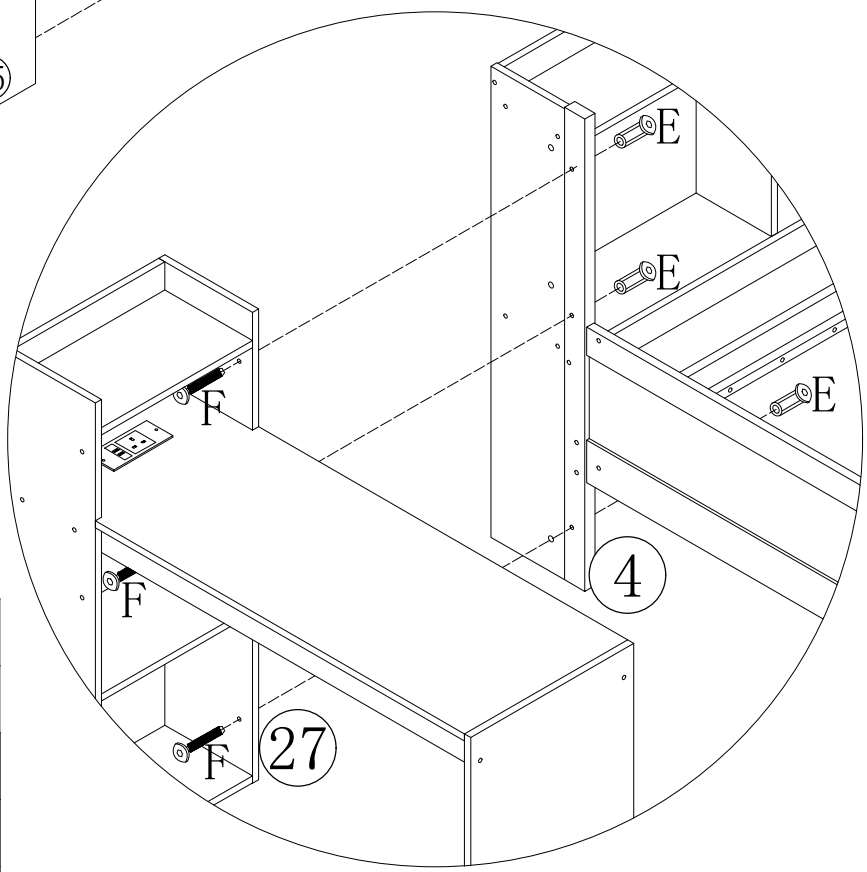
B	6x60	1PC
C		1PC
E	6x20	3PCS
F	6x25	3PCS
S	M4	2PCS

ASSEMBLY INSTRUCTIONS

18(version2)



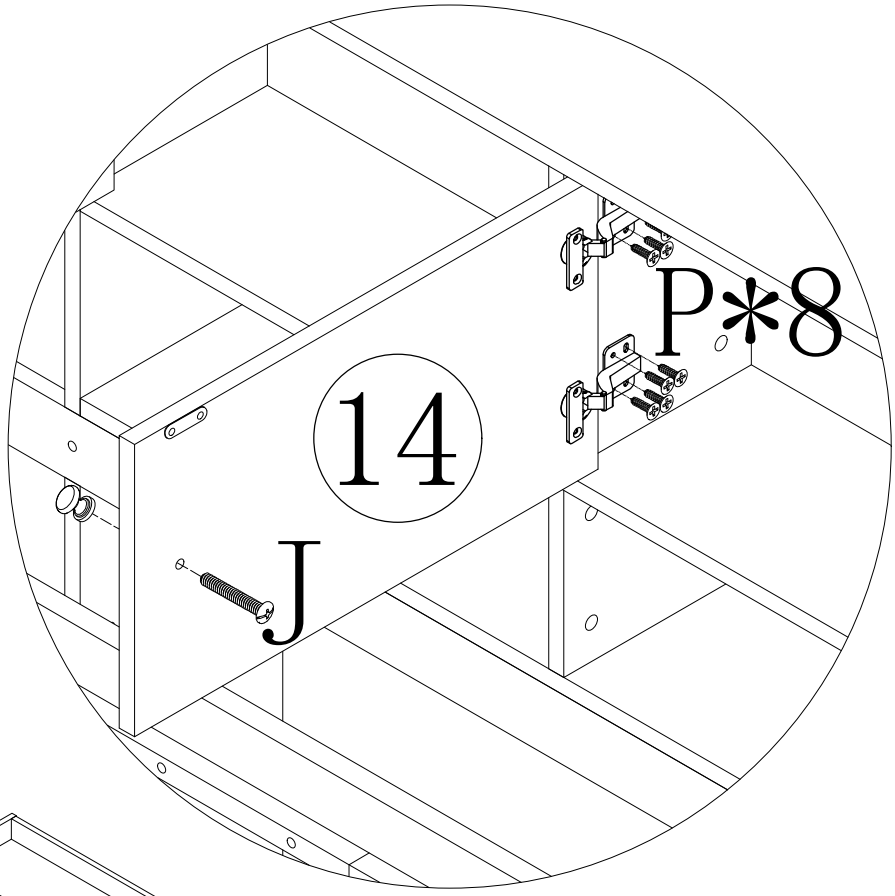


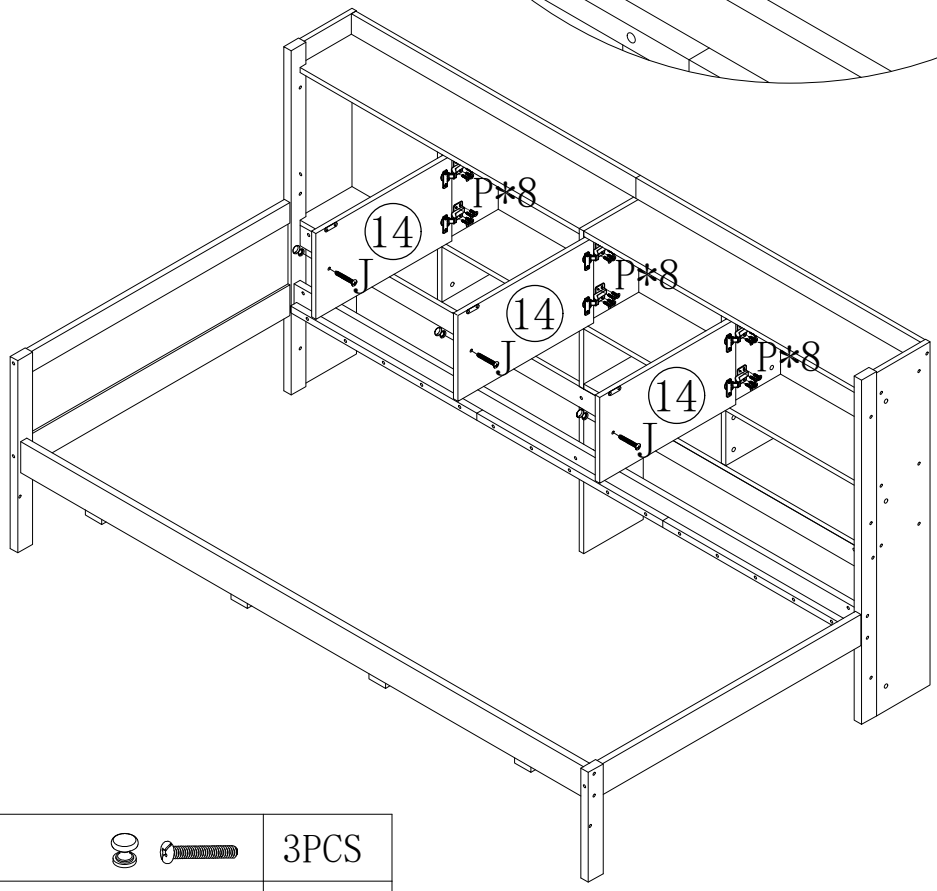


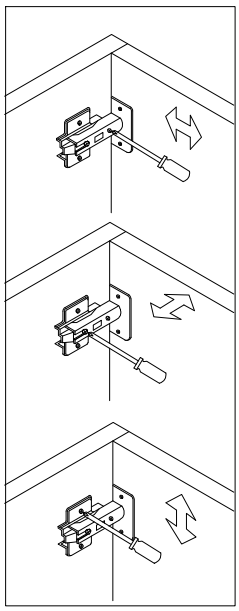
B	6x60	1PC
C		1PC
E	6x20	3PCS
F	6x25	3PCS
S	M4	2PCS

ASSEMBLY INSTRUCTIONS

19



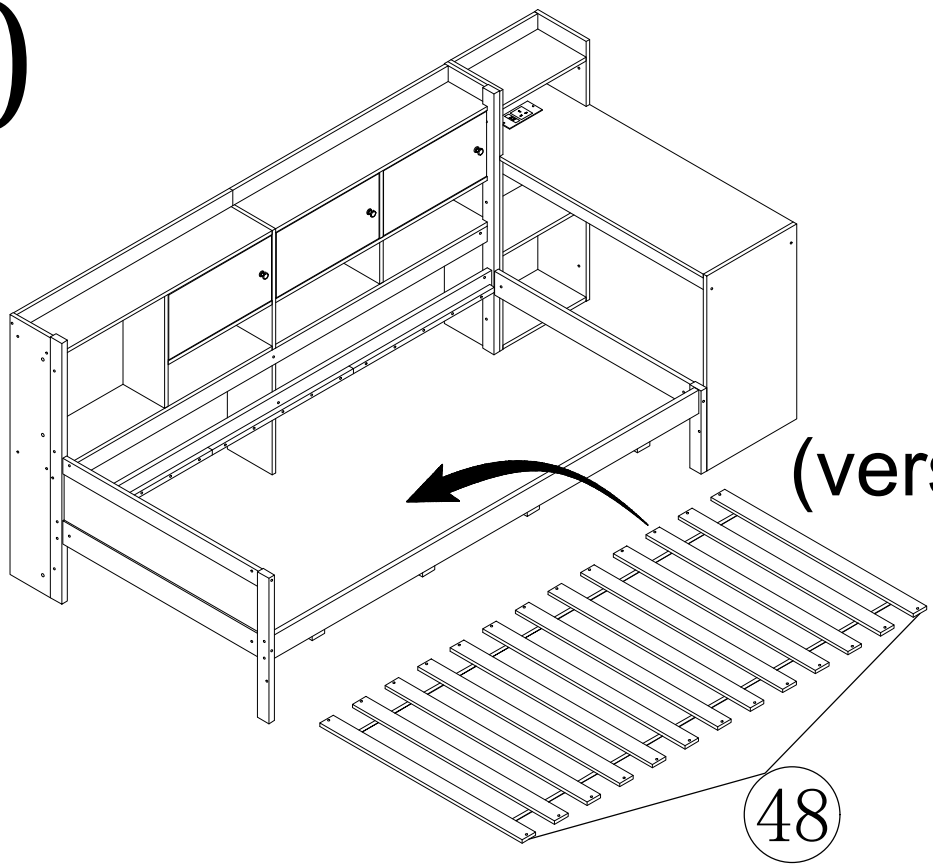




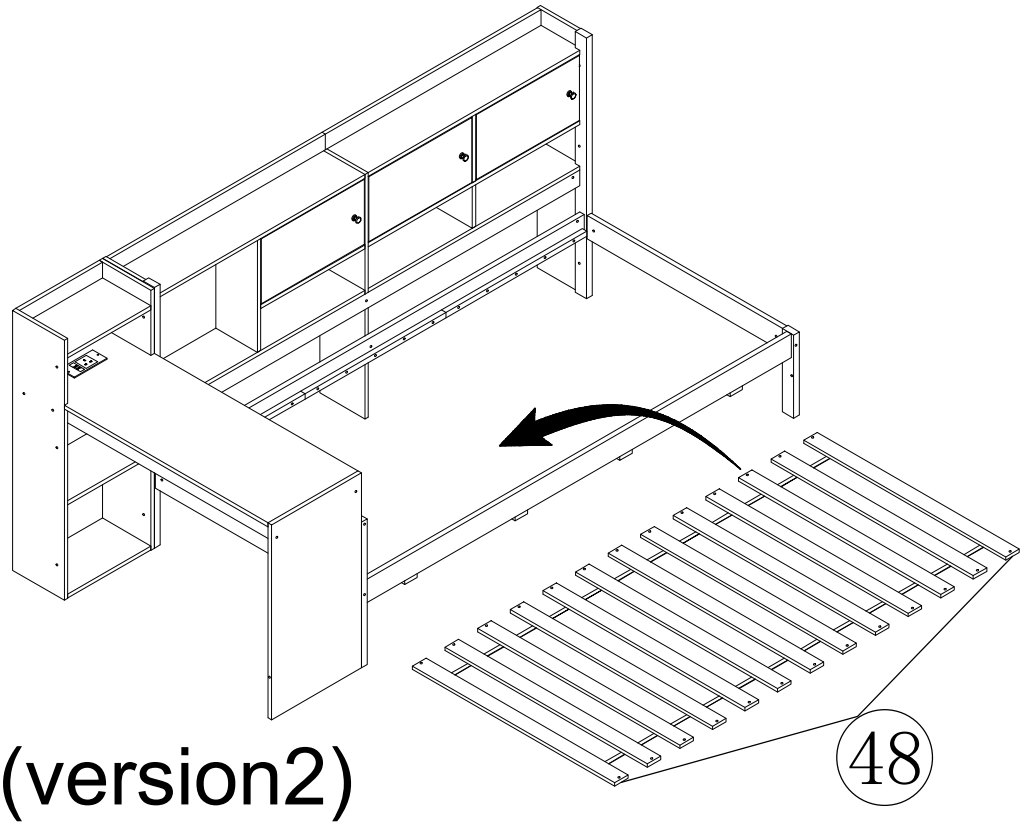
J		3PCS
P	3x14	24PCS

ASSEMBLY INSTRUCTIONS

20



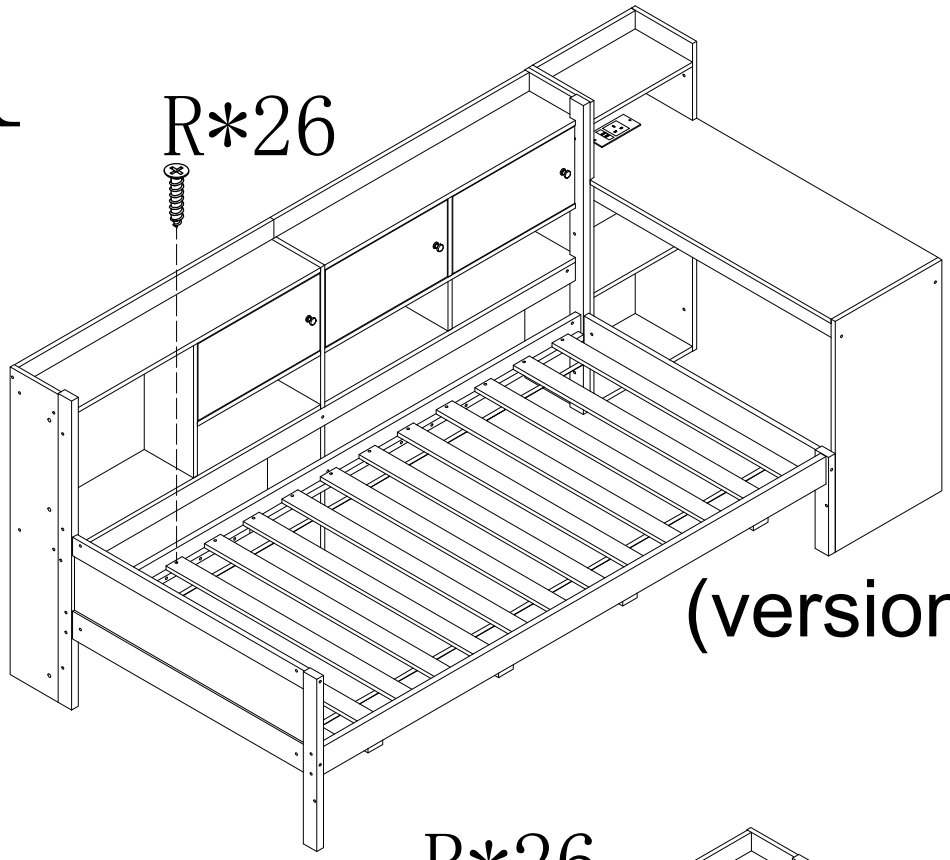
(version1)



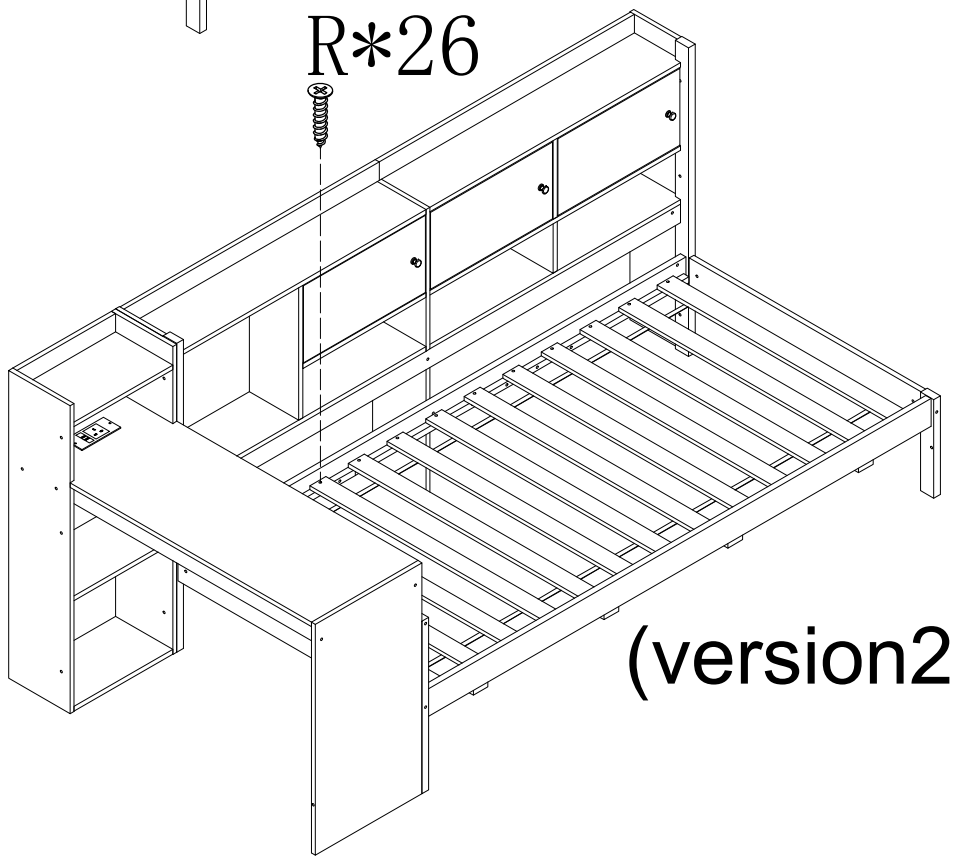
(version2)

ASSEMBLY INSTRUCTIONS

21



(version1)

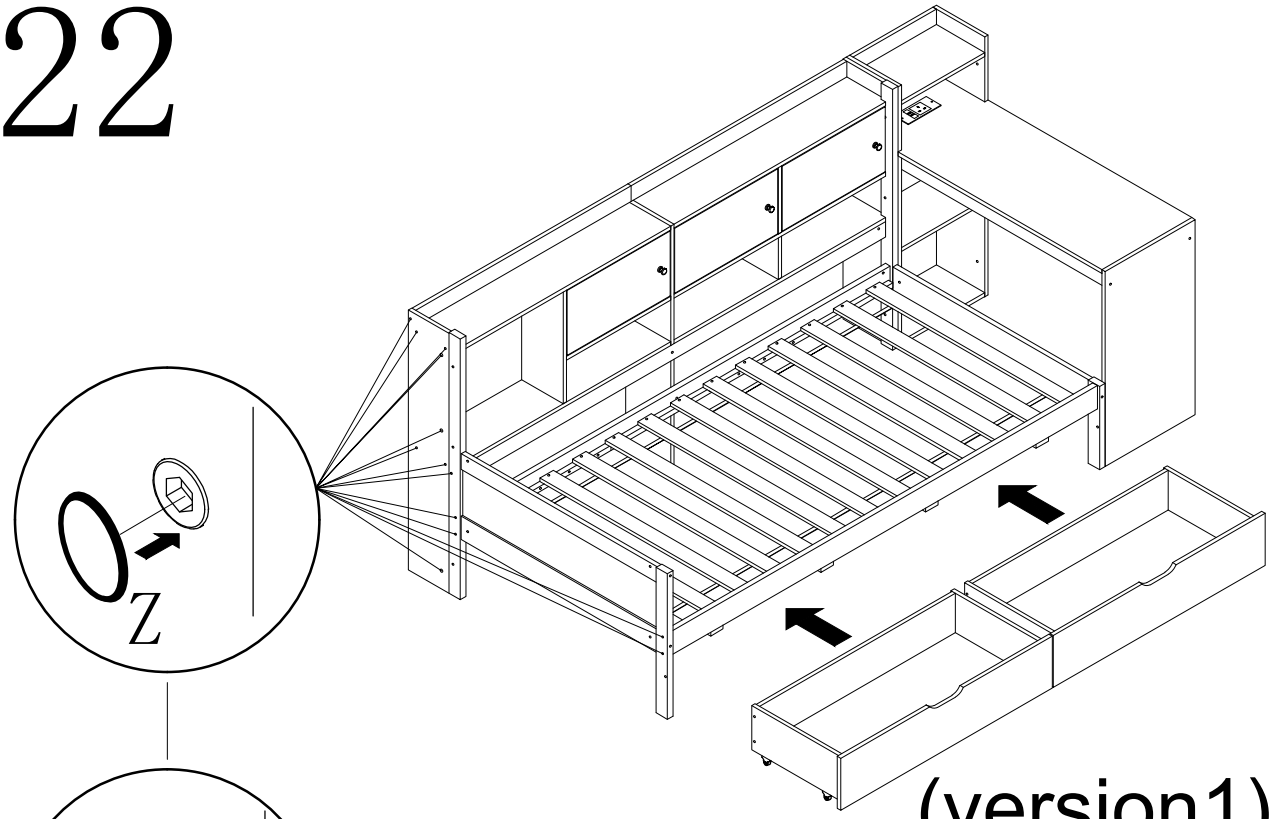


(version2)

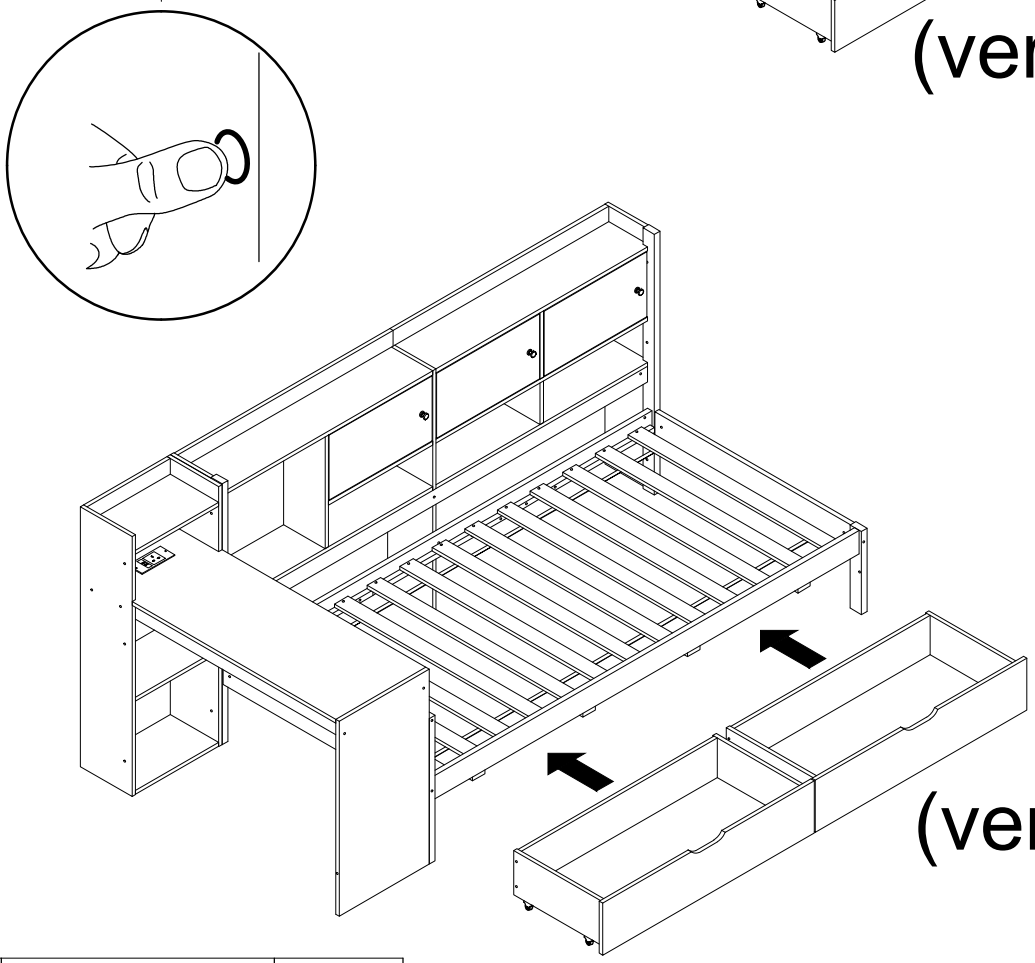
R	4x30		26PCS

ASSEMBLY INSTRUCTIONS

22



(version1)



(version2)

Z		13PCS

Certificate of Compliance

The Restriction of the Use of Certain Hazardous Substances in Electrical and Electronic Equipment Regulations 2012 (S.I. 2012 No. 3032) and its amendment.

Issue Date: Nov.27, 2025

Company Name	:	GUANG TAI ENTERPRISE CO.,LTD
Address	:	Rm402,Bldg 4,No.2 Dapianmei Rd.Dapianmei Village,Dalingshang DONGGUAN GUANGDONG
Manufacturer	:	GUANG TAI ENTERPRISE CO.,LTD
Address	:	Rm402,Bldg 4,No.2 Dapianmei Rd.Dapianmei Village,Dalingshang DONGGUAN GUANGDONG
Sample Name	:	Furniture Power Distribution Unit
Sample Model	:	JN02-00-21Y;JN02-00-111Y;JN02-00-112Y;JN02-00-212Y; JN02-00-22Y;JN00-00-02KY;JN00-00-03KY;JN00-00-03Y; JN00-00-04KY;JN00-00-04Y;JN02-00-113KY; JN02-00-113Y;JN02-00-23Y; JN02-00-23KY

This Declaration of Conformity is based on a test procedure or an evaluation of the above-mentioned product. This is to certify that the above-mentioned product is in compliance with the According to IEC63000:2018+AMD1:2017 and UKCA RoHS Regulations (SI 2012/3032) of The Restriction of the Use of Certain Hazardous Substances in Electrical and Electronic Equipment (Amendment) Regulations .

It is only valid in connection with the test report (Report No.: COBO25110737-R1)

UK CA RoHS

Signed for and on Behalf of COBO

Sam Xie

Sam Xie / Technical Manager

GUANGDONG TI-COBO TESTING CO.,LTD.

EA601,Yishili Building No.9,Zongbu 2nd Road,Songshan Lake Sci.&Tech. Park,Dongguan,Guangdong,China

Tel:86-769-26622261 Fax:86-769-26622012

AI识图

ATTESTATION ◆ ATTESTATO ◆ ATTESTACIÓN ◆ BESCHEINIGUNG ◆ ATTESTATION

China

Attestation of Conformity

No. E8AUK 128892 0005 Rev. 00

Holder of Attestation: **GUANG TAI ENTERPRISE CO., LTD.**
Rm 402, Bldg 4. No.2 Dapianmei Rd.
Dapianmei Village, Dalingshan
523000 Dongguan, Guangdong
PEOPLE'S REPUBLIC OF CHINA

Name of Object: **Power supply**
(Furniture Power Distribution Unit)

Model(s): **JN00-00-02KY, JN02-00-23KY, JN02-00-24KY, JN02-00-23Y, JN02-00-24Y, JN02-00-21Y, JN00-00-04KY, JN00-00-03KY, JN02-00-22Y, JN02-00-22YM, JN02-00-23YM, JN02-00-23-KYM**

Description of Object:
Ratings:
Input: 250VAC, 50Hz, Max 13A, Max 2990W
USB A1/USB A2 Output: 5.0VDC, 2.1A, 10.5W Max
Total USB output: 5.0VDC, 2.1A, 10.5W Max
Protection Class: I

Tested according to:
EN 55032:2015/A1:2020
EN 55035:2017/A11:2020
EN IEC 61000-3-2:2019/A1:2021
EN 61000-3-3:2013/A2:2021
BS EN 55032:2015/A1:2020
BS EN 55035:2017/A11:2020
BS EN IEC 61000-3-2:2019/A1:2021
BS EN 61000-3-3:2013/A2:2021

This Attestation of Conformity is issued on a voluntary basis according to the Electromagnetic Compatibility Regulations 2016 relating to electromagnetic compatibility. It confirms that the listed apparatus complies with the principal protection requirements of the regulation and is based on the technical specifications applicable at the time of issuance. It refers only to the particular sample submitted for conformity assessment. For details see: www.tuvsud.com/ps-cert

Test report no.: 657602423601

Date, 2025-01-13

(Laurent Yuan)

This Attestation does not replace the regulatory UK Declaration of Conformity (DoC) and does not allow for UKCA marking. After preparation of the necessary technical documentation and establishing compliance to requirements of all applicable regulations, the manufacturer may sign a DoC and apply the UKCA marking. The DoC is issued under the sole responsibility of the manufacturer.

UKCA

TÜV SÜD Certification and Testing (China) Co., Ltd. Floor 1-4, Building B, No.37, Tuanjie Road(Middle), Xishan Economic and Technological Development Zone, Wuxi, Jiangsu, P.R. China

TÜV®

ATTESTATION ◆ ATTESTATO ◆ ATTESTACIÓN ◆ BESCHEINIGUNG ◆ ATTESTATION

China

Attestation of Conformity

No. N8AUK 128892 0004 Rev. 00

Model(s): **JN00-00-02KY, JN02-00-23KY, JN02-00-24KY, JN02-00-23Y, JN02-00-24Y, JN02-00-21Y, JN00-00-04KY, JN00-00-03KY, JN02-00-22Y, JN02-00-22YM, JN02-00-23YM, JN02-00-23-KYM**

Parameters:

Max. 13A, 250V~, 50-60Hz, Max. 2990W,
USB A1/USB A2 Output: 5.0VDC, 2.1A, 10.5W Max.
Total USB output: 5.0VDC, 2.1A, 10.5W Max.

These models in addition to the naming and some models with connectors, no other difference.
Table 1 model difference:

Model	Difference
JN00-00-02KY, JN02-00-23KY, JN02-00-24KY, JN02-00-23Y, JN02-00-24Y, JN02-00-21Y, JN00-00-04KY, JN00-00-03KY, JN02-00-22Y	Without AC connector:
JN02-00-22YM, JN02-00-23YM, JN02-00-23-KYM	With AC connector:

Tested according to: EN 62368-1:2014/A11:2017
BS 1363-2:2023

This Attestation does not replace the regulatory UK Declaration of Conformity (DoC) and does not allow for UKCA marking. After preparation of the necessary technical documentation and establishing compliance to requirements of all applicable regulations, the manufacturer may sign a DoC and apply the UKCA marking. The DoC is issued under the sole responsibility of the manufacturer.

TÜV SÜD Certification and Testing (China) Co., Ltd. Floor 1-4, Building B, No.37, Tuanjie Road(Middle), Xishan Economic and Technological Development Zone, Wuxi, Jiangsu, P.R. China