ASSEMBLY INSTRUCTION

65#

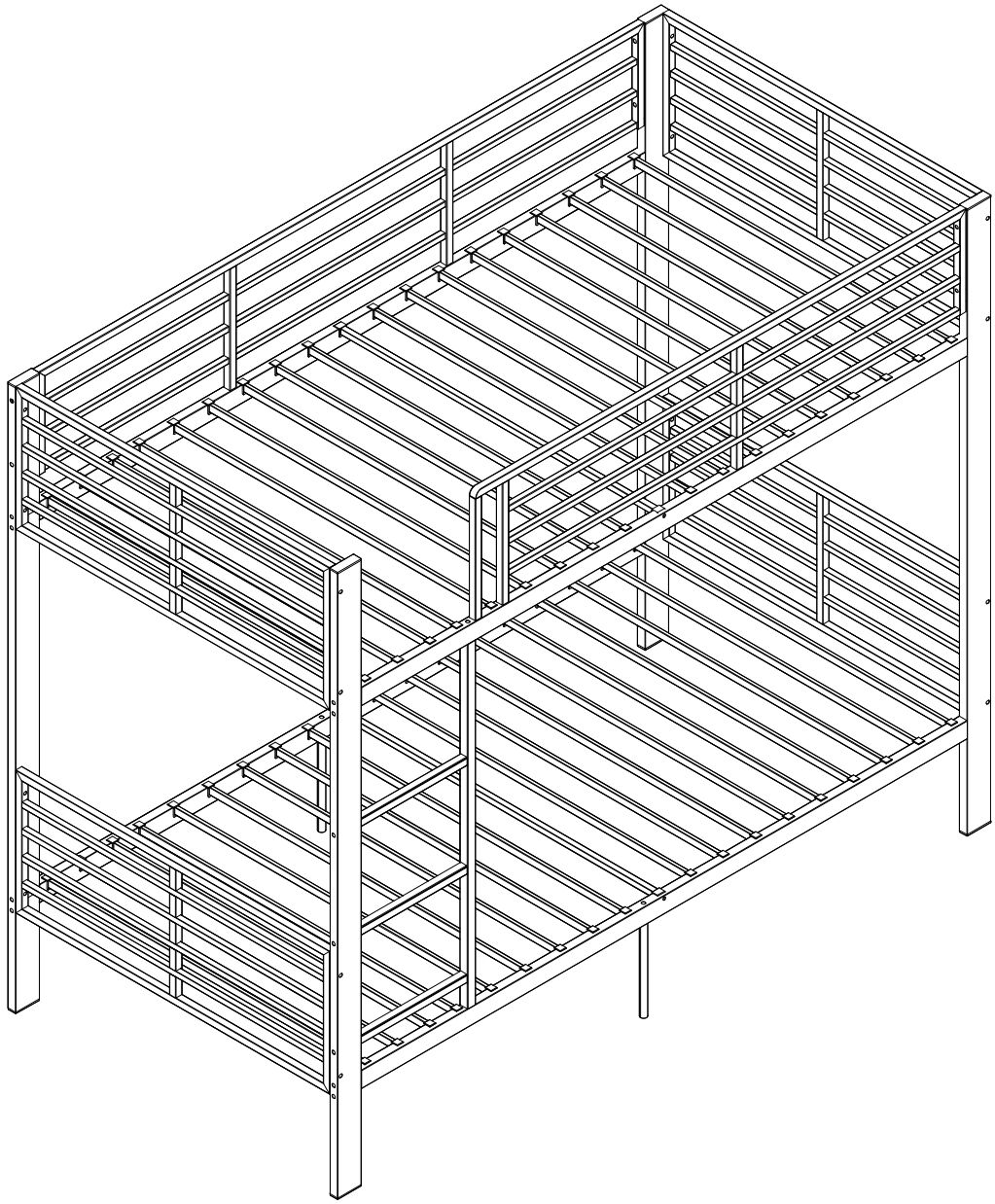

IMPORTANT NOTE

1.Please check that all parts are complete before installation.
2.Please strictly follow the installation steps to install.
3.Please install the bed on a clean and smooth surface to prevent any damage
4.Please do not use the power tools to assemble the bed.
5.Please periodically check all the fittings and re-tighten as necessary.
6. Please do not use the bed unless all bolts and screw are firmly secured

Components List

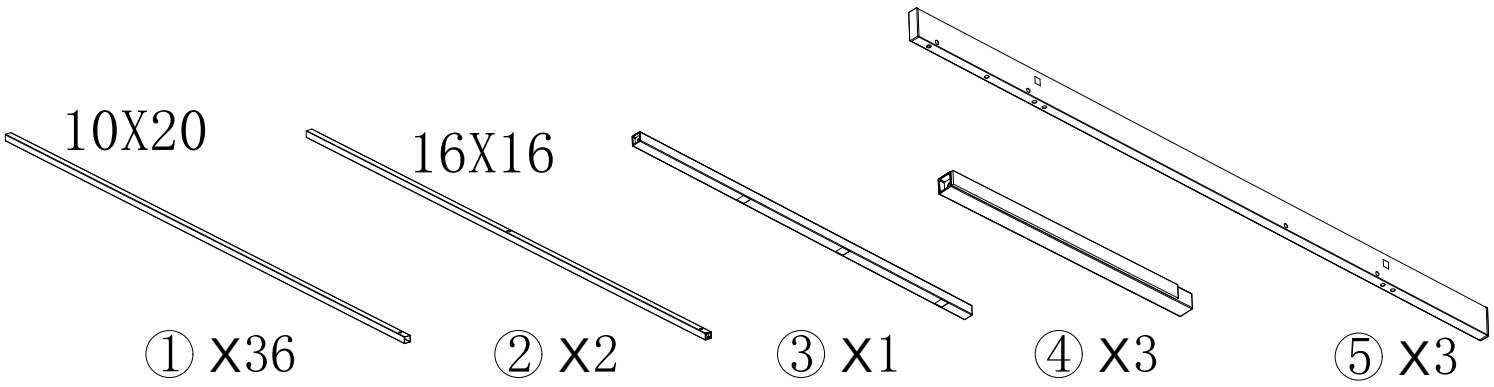

① X36 ② X2 ③ X1 ④ X3 ⑤ X3

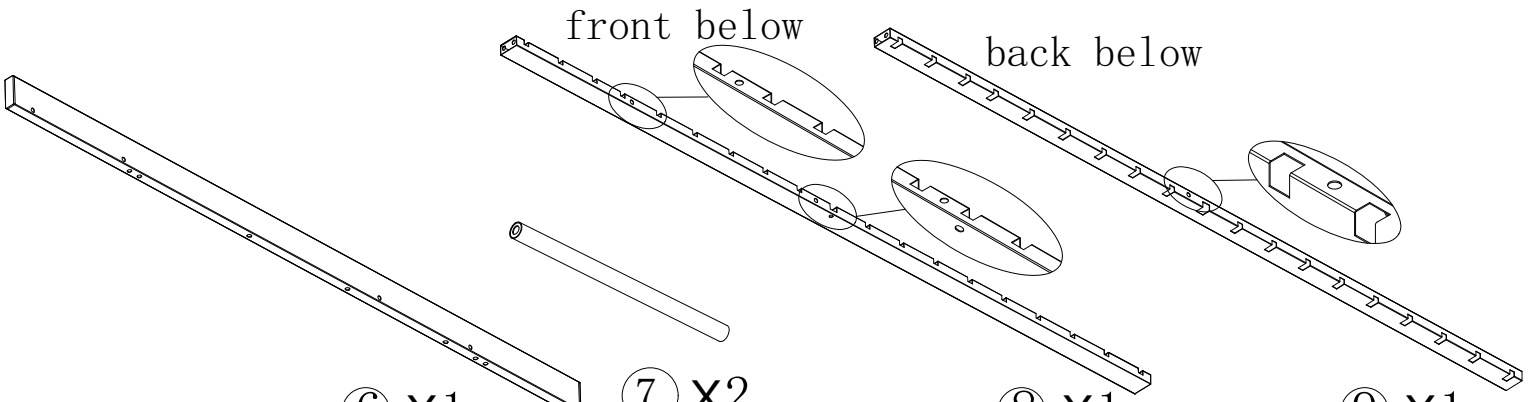

⑥ X1 ⑦ X2 ⑧ X1 ⑨ X1

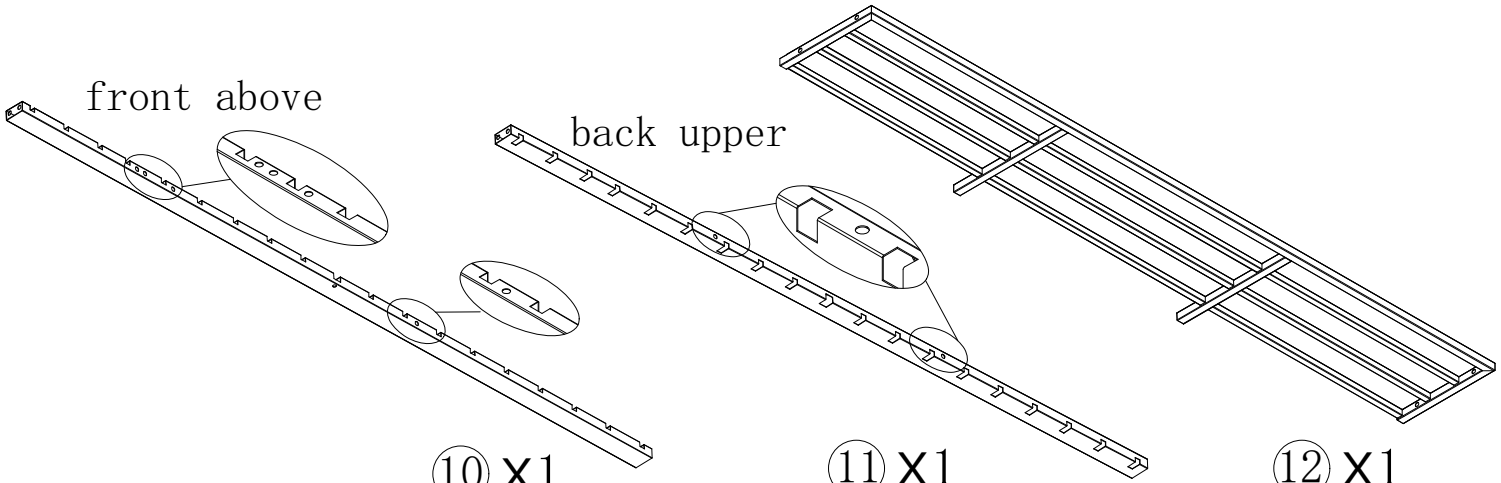

⑩ X1 ⑪ X1 ⑫ X1

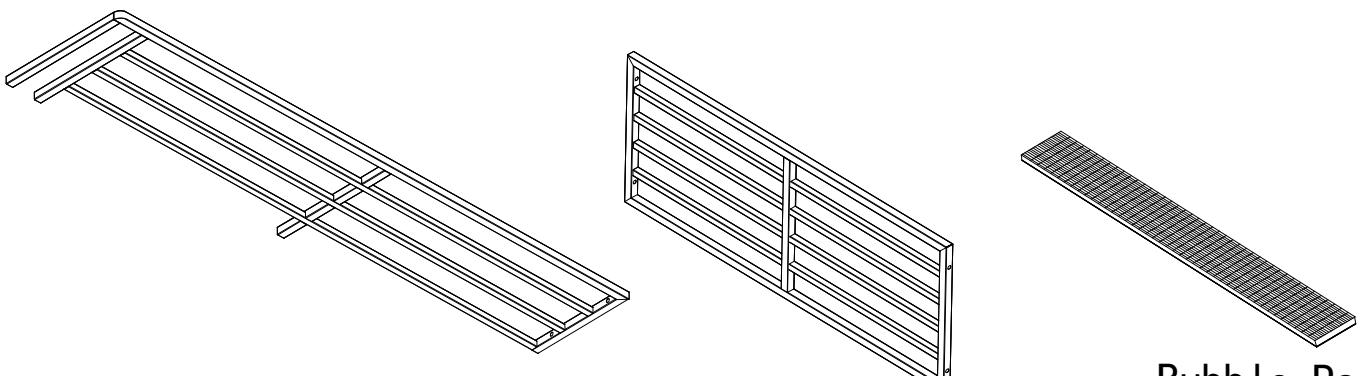

⑬ X1 ⑭ X4

Bubble Pads
⑮ X3

Hardwares List

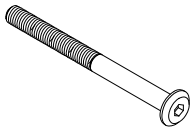

M8*95mm

Ⓐ X19

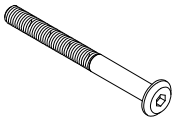

M8*85mm

Ⓑ X6

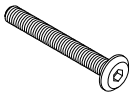

M8*70mm

Ⓒ X7

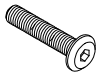

M6*30mm

Ⓓ X4



M8*35mm

Ⓔ X16



M8*16mm

Ⓕ X5



M8*25mm

Ⓖ X22



4#

Ⓚ X2



5#

Ⓛ X2

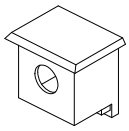

16X16

Ⓜ X4

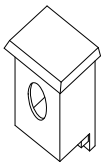

10X20

Ⓝ X72

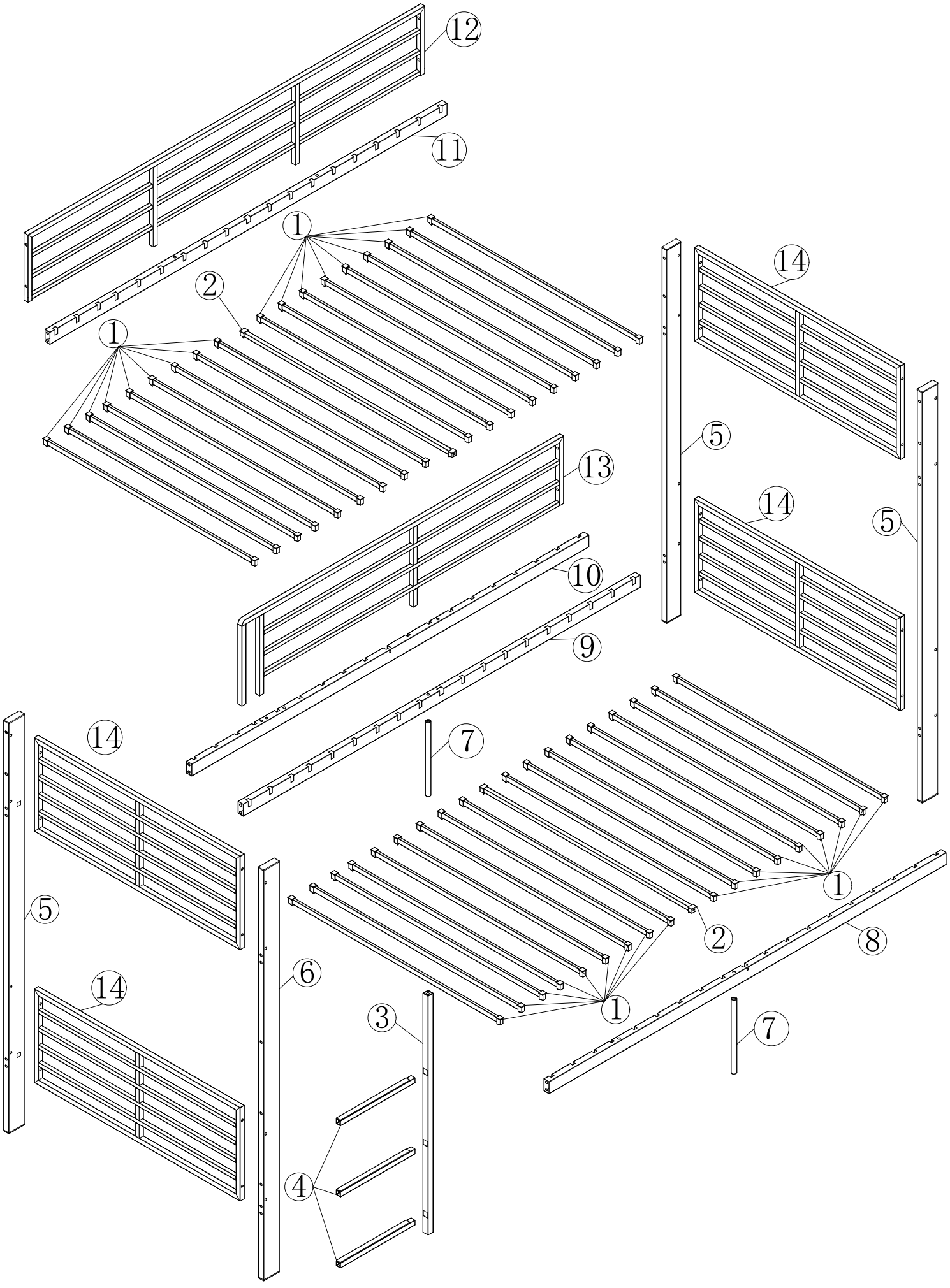
12
11
1
2
1
14
5
13
14
5
10
9
7
14
5
1
2
8
6
14
1
3
7
4

Step 1

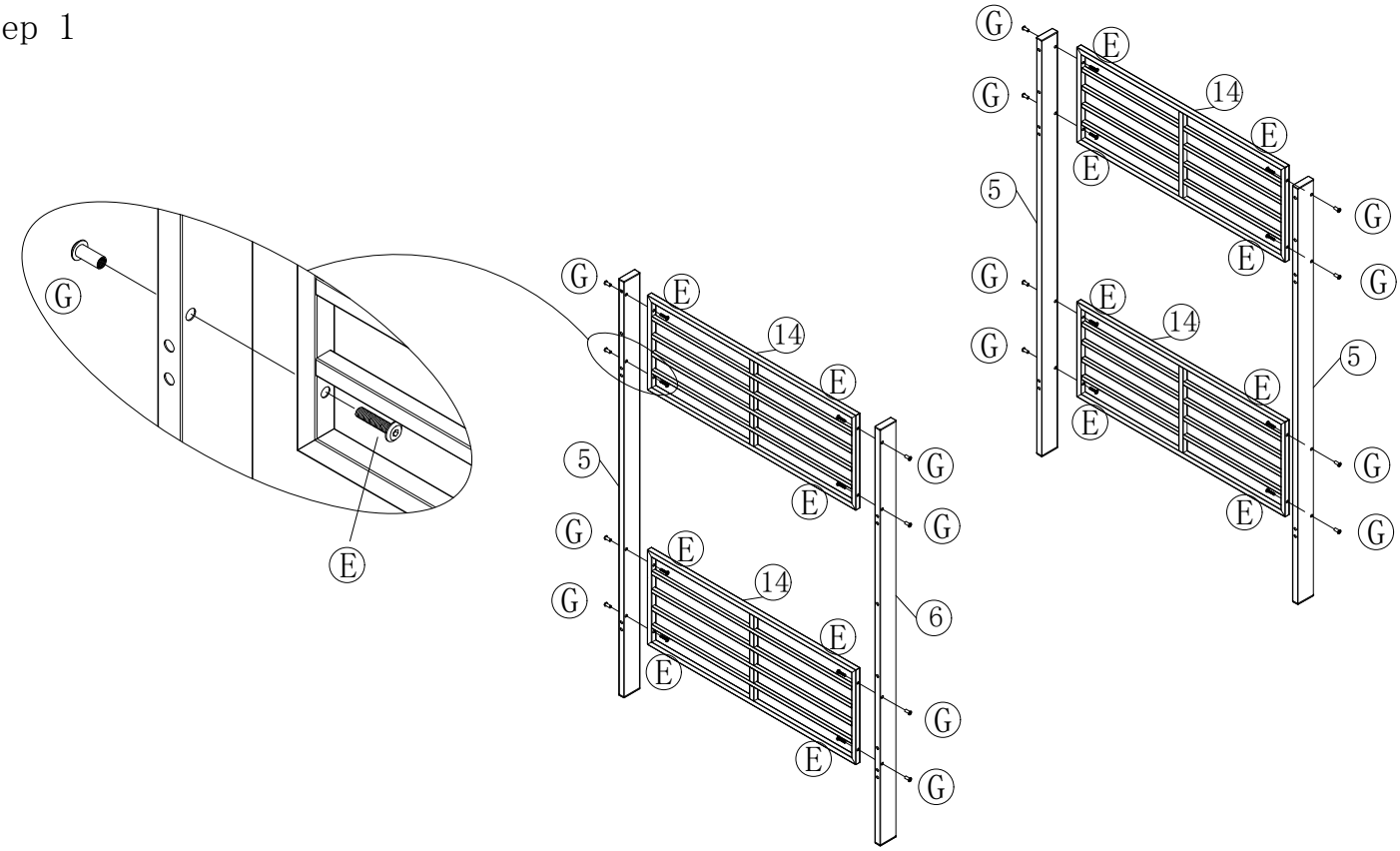



M8*35mm
Ⓔ X16

M8*25mm
Ⓖ X16

5#
Ⓛ X2

Step 2

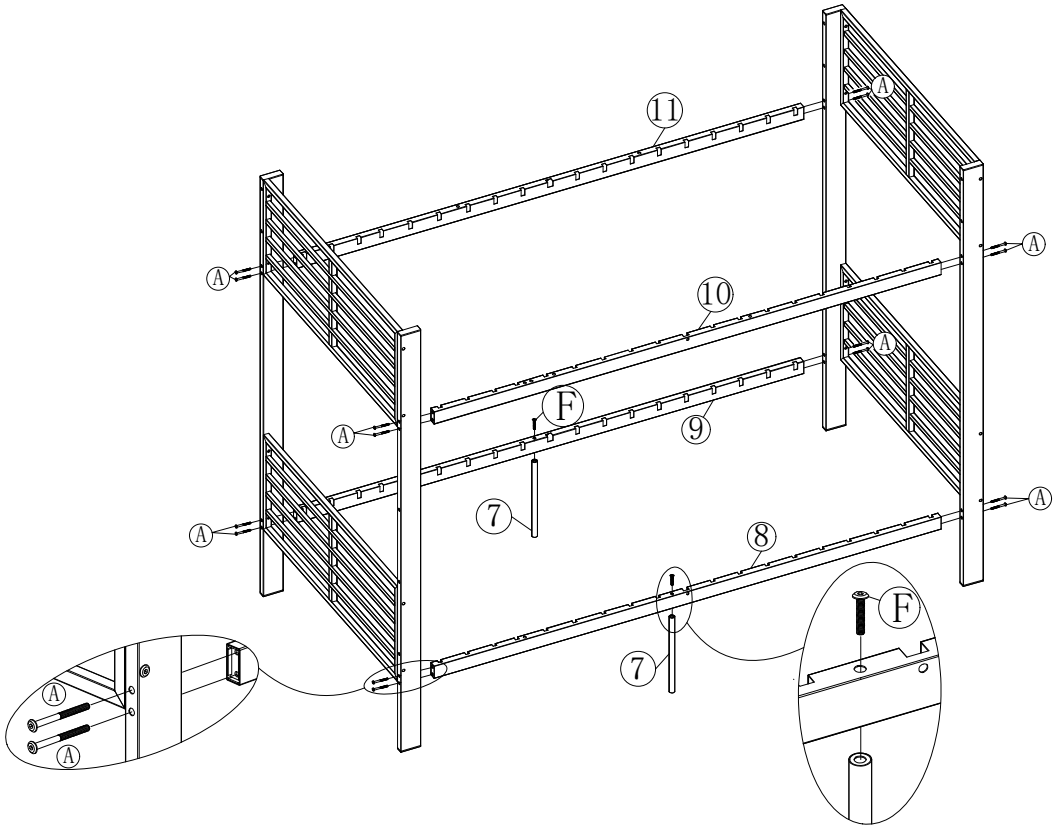

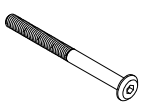

M8*95mm
Ⓐ X16



M8*16mm
Ⓕ X2



5#
Ⓛ X2

Step 3

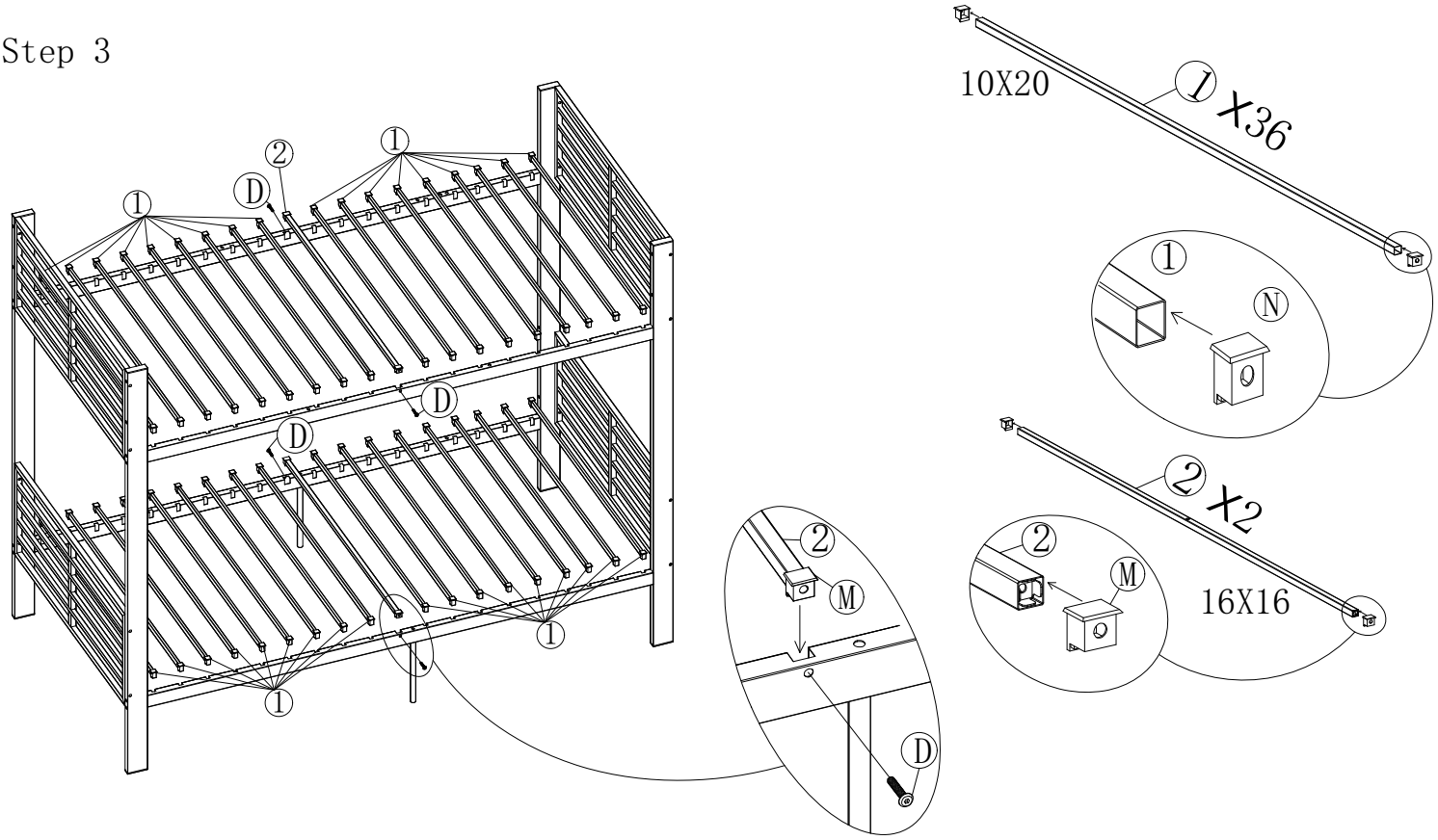

10X20
1 X36
1
N
2 X2
2
M
16X16
1
2
D
D
D
1
1
2
M
D

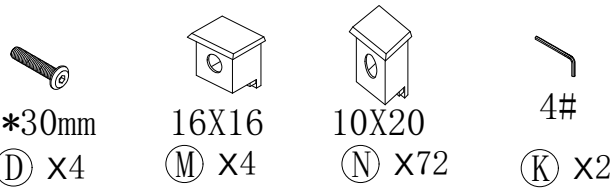

M6*30mm
D X4
16X16
M X4
10X20
N X72
4#
K X2

Step 4

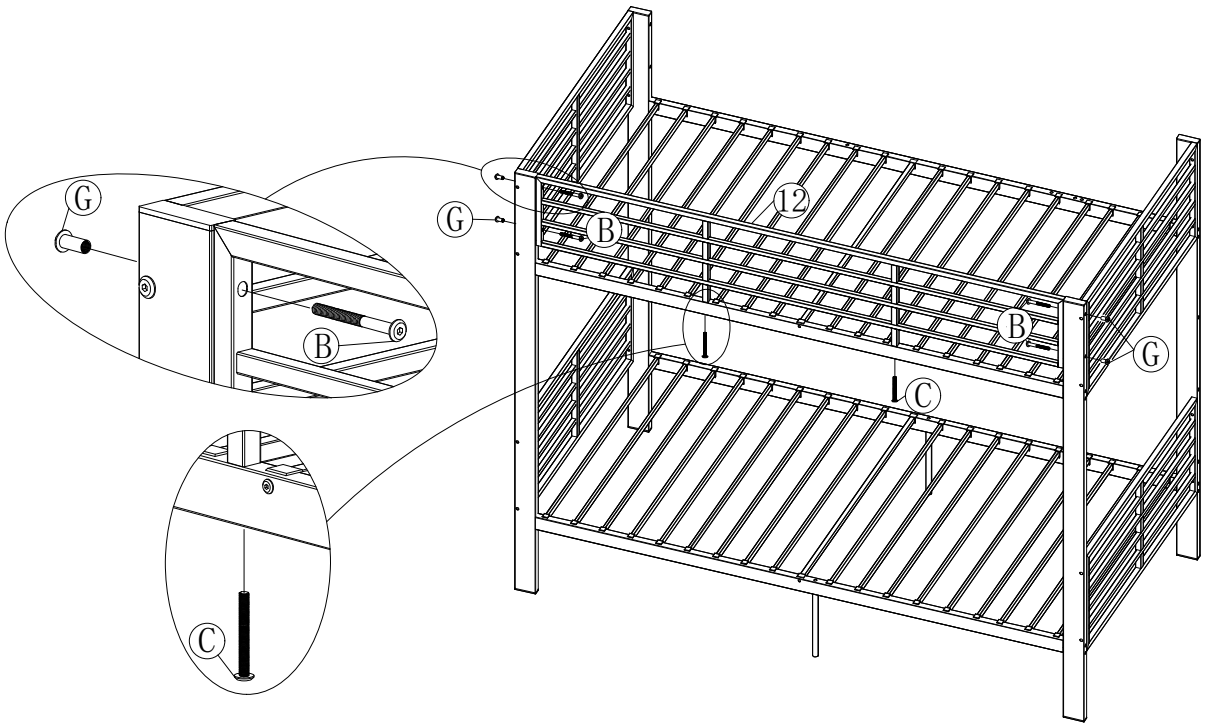

G
G
B
12
B
B
G
C
C

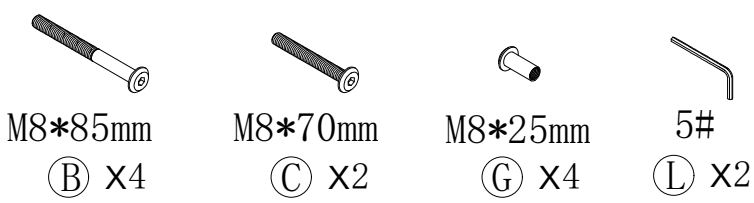

M8*85mm
B X4
M8*70mm
C X2
M8*25mm
G X4
5#
L X2

Step 5

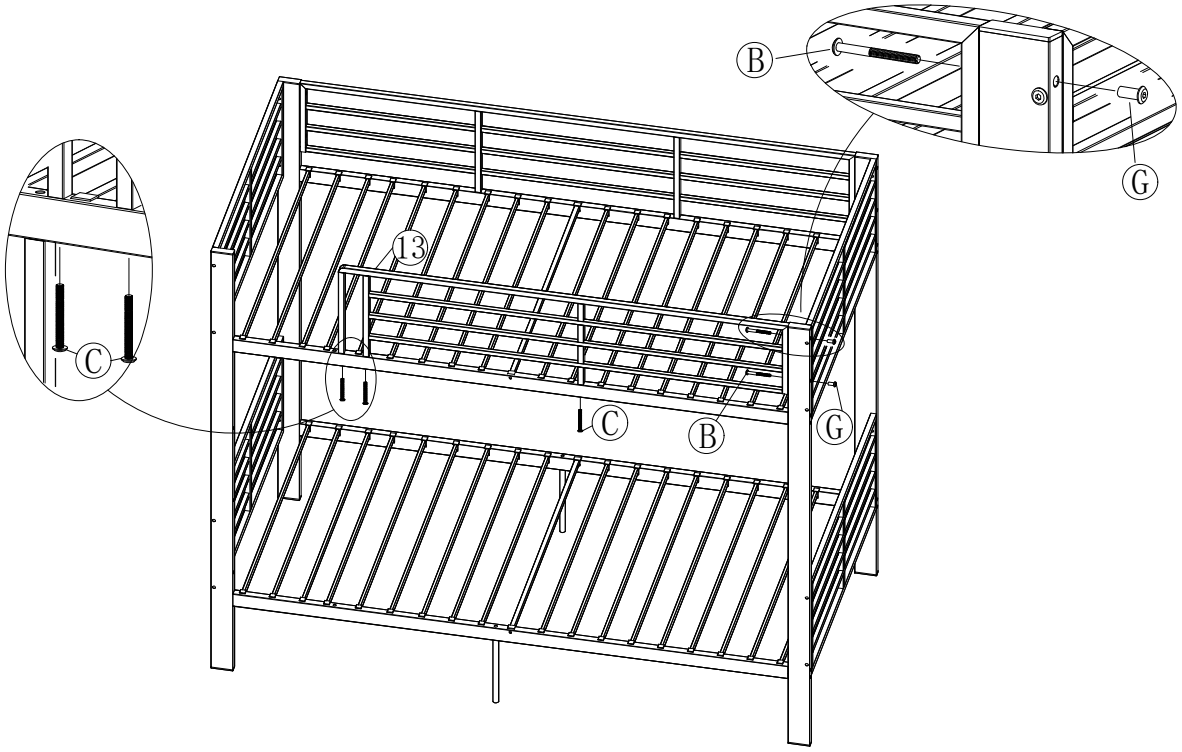



M8*85mm
Ⓑ X2

M8*70mm
Ⓒ X3

M8*25mm
Ⓖ X2

5#
Ⓛ X2

Step 6

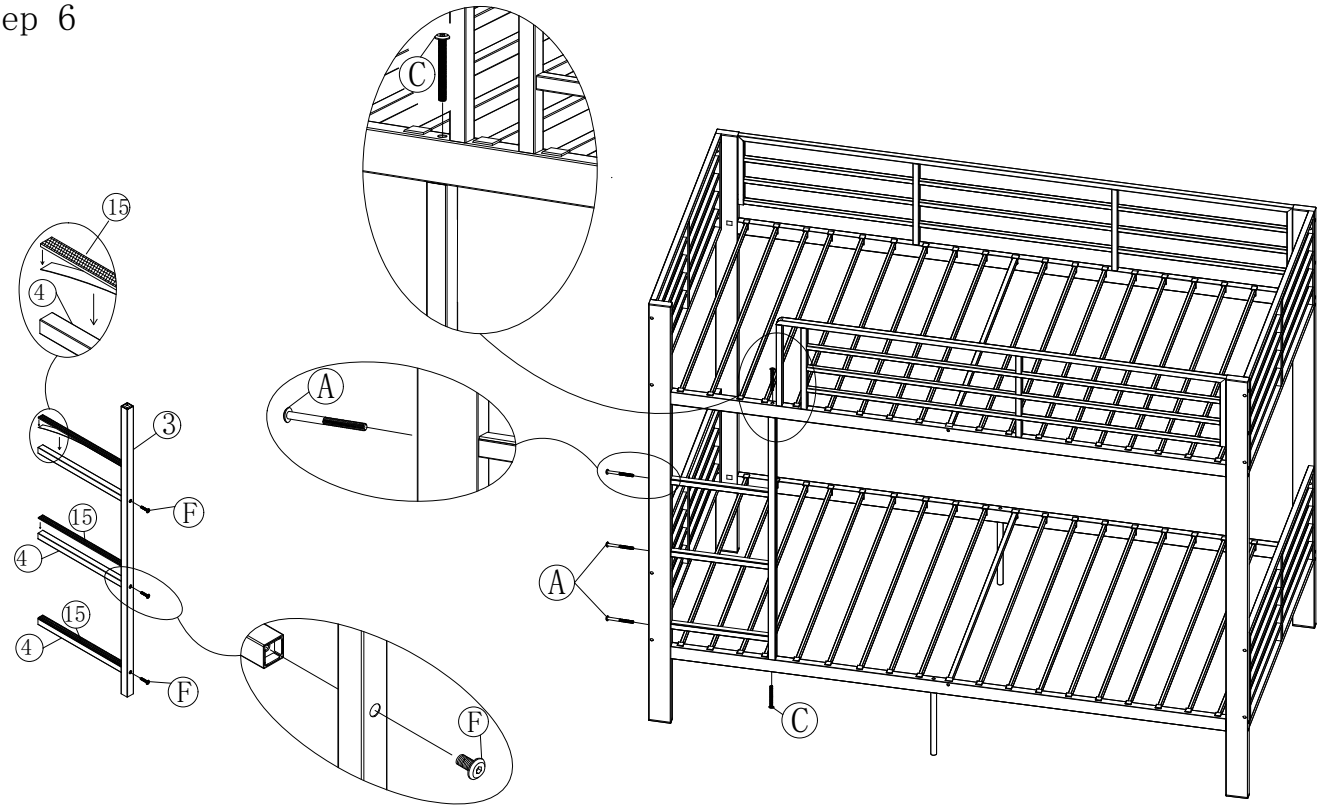

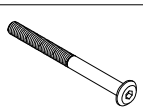

M8*95mm
Ⓐ X3



M8*70mm
Ⓒ X2



M8*16mm
Ⓕ X3



5#
Ⓛ X2