TRAMPOLINE USER MANUAL

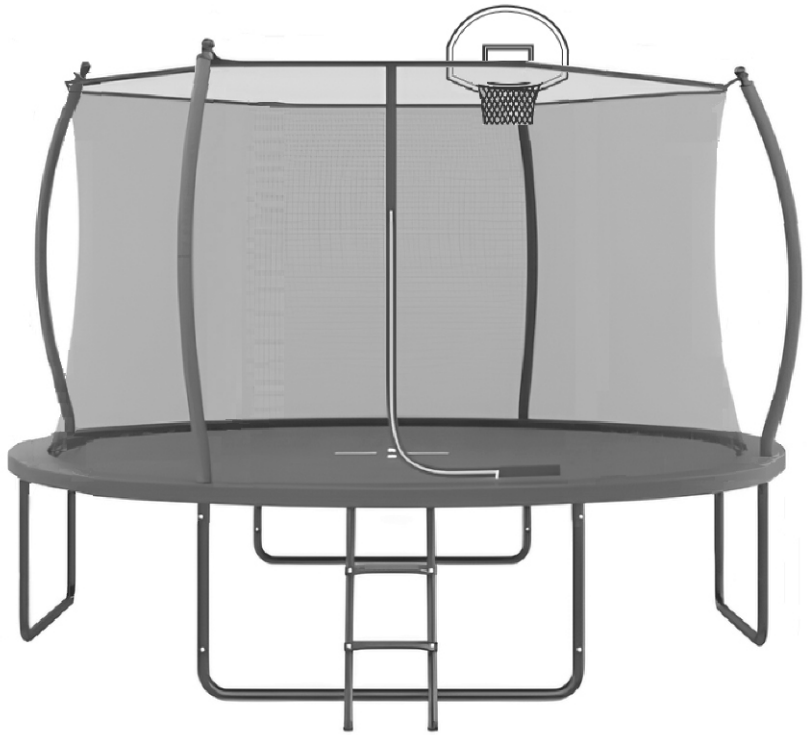

⚠ WARNING

-Warning! Choking hazard, small parts.
-Adult assembly required.
-Read all precautions and instructions
in this manual before using this equipment.
Save this manual for future reference

READY TO JUMP!

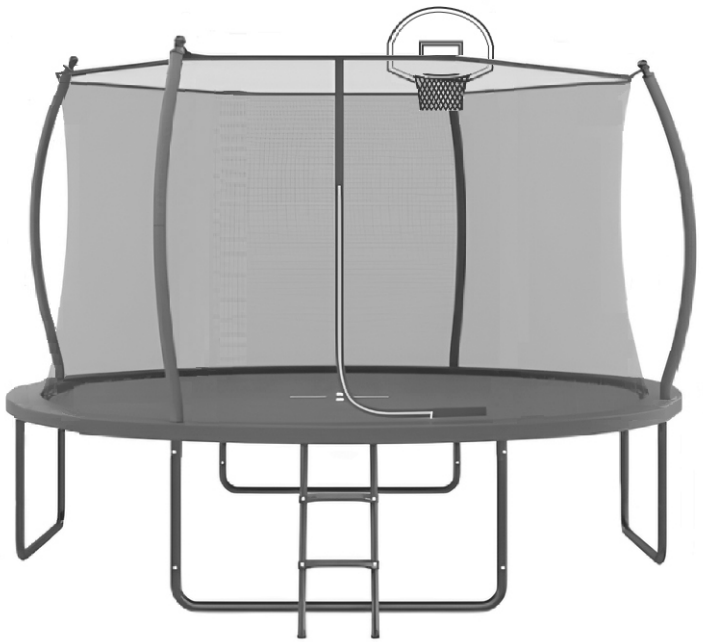

INSTRUCTIONS FOR USE

To reduce the risk of serious injury, read and follow all of the warnings, precautions, and instructions in this manual before you use the trampoline enclosure. Warnings and instructions for care, maintenance, and use of this trampoline and enclosure are included to promote safe enjoyable use of this equipment.

1. It is the responsibility of the owner and supervisors of the trampoline and enclosure to make sure all users obey the safety instructions given in this manual. The trampoline should only be used with mature, knowledgeable supervision.

2. Secure the trampoline and trampoline enclosure against unauthorized and unsupervised use. If you use a ladder to get on and off the trampoline, be sure to remove it when the trampoline and enclosure are not being used.

3. Be sure there is enough clear space above the trampoline and enclosure before use. It is best to have at least 24 feet (7.3 meters) of clear space above the ground. This space must be clear of wires, tree limbs, and any other possible hazards.

4. Lateral (sideways) clearance is very important. Do not place the trampoline and enclosure near walls, buildings, fences, sidewalks, and other play areas. Always keep a clear space on all sides of the trampoline and enclosure.

5. Remove any objects that could interfere with the performer. Maintain a clear area around and under the trampoline.

6. Be sure the trampoline and enclosure are on a level surface before use.

7. Always inspect the trampoline and enclosure before each use. Make sure that the frame, frame pad, enclosure net, safety poles, are correctly and securely positioned. Replace any worn, defective, or missing parts. (Jumpers may be hurt if the trampoline and enclosure are used when they are in poor condition.)

8. Bounce only when the surface of the mat (bed) is dry. There should be very little or no wind or air movement. The trampoline and enclosure must not be used in gusty or severe winds.

9. The trampoline and enclosure frames are made of metal. They are not grounded and will conduct electricity. For this reason, an electrocution hazard exists. No lights, electric heaters, extension cords, or household electrical appliances are to be permitted on the trampoline or in enclosure at any time.

10. Use the trampoline and enclosure in an area with lots of light. If the trampoline and enclosure are indoors or in shady areas, you may need to us artificial (electrical) lighting in the area.

11. During the winter months, the trampoline soft materials will need to be removed and stored in a dry place. If left up in the winter months, it may cause damage to the springs, jump mat, spring pad, and enclosure. The warranty will be void.

12. This trampoline and enclosure is made for users who weigh less than 400 lbs.

13. Trampoline over 20 in. (51 cm) tall are not recommended for use by children under 6 years of age.

14. The trampoline enclosure is to be used only with the size of trampoline for which the enclosure is designed.

15. Misuse and abuse of the trampoline enclosure is dangerous and can cause serious injury.

16. Do not attach anything to the enclosure barrier that is not a manufacturer-approved accessory or part of the enclosure system.

17. Please remove any jewelry before jumping begins. Jewelry may get caught in the enclosure netting.

18. Wear clothing free of drawstrings, hooks, loops, or anything that could be caught while using the trampoline/enclosure and result in entanglement, strangulation, or both.

19. DO NOT let more than one person inside the trampoline enclosure at the same time. Two or more people jumping at the same time can cause serious injury.

20. DO NOT jump on the trampoline while you have or are holding any objects, especially something sharp or breakable.

21. DO NOT use the trampoline and enclosure if you have been using alcohol or drugs.

22. DO NOT attempt or allow somersaults (flips) on the trampoline. Landing on the head or neck can cause serious injury, paralysis, or death, even when landing in the middle of the jumping mat.

23. Always climb on to and off of the trampoline. It is a dangerous practice to jump from the trampoline to the floor or ground when dismounting, or to jump onto the trampoline when mounting.

24. DO NOT use the trampoline as a springboard to other objects. Enter and exit the enclosure only at the enclosure door or barrier made for that purpose.

25. DO NOT attempt to crawl under, jump over, intentionally bounce off of, hang from, climb on, kick, or cut the barrier netting.

26. While keeping head erect, focus eyes on the trampoline toward the perimeter. This will help control bounce.

27. Stop bouncing by flexing knees as feet come in contact with the trampoline bed. Learn this skill before attempting others.

28. Avoid bouncing too high. Stay low until bounce control and repeated landings in the center of the trampoline can be accomplished. Control is more important than height.

29. Avoid bouncing when tired. Keep turns short.

30. Learn fundamental bounces and body positions thoroughly before trying more advanced skills. A variety of trampoline activities can be carried out performing the basic fundamentals in various series and combinations, performing one fundamental after another, with feet bounces between them.

31. For additional information concerning the trampoline equipment contact the manufacturer. For information concerning skill training, contact a certified trampoline instructor.

32. Do not use or stand near the trampoline in windy or gusty conditions. A trampoline can become airborne when exposed to sustained wind or gusting wind conditions. This can result in serious injury, paralysis, or death, as well as property damage. To reduce these risks, disassemble the trampoline and enclosure and store them until weather conditions improve. Anchoring a trampoline frame may prevent the trampoline from moving as a result of the wind, but even anchored trampolines can become airborne or damaged. Consult a qualified contractor to determine what type of anchor works best in your location.

INSTRUCTIONS & MODEL LESSONS

The following lessons are examples of an instructional program. They should follow a complete discussion and demonstration of body mechanics between the supervision and the student(s).

1. Mounting and dismounting: Demonstration and practice of proper techniques.
2. Fundamental bounce: Demonstration and practice.
3. Breaking: Demonstration and practice. Breaking on command.
4. Hand and knee drop: Demonstration and practice, stressing four-point landing and alignment.

Lesson 1: Fundamental Bounce

1. Start from a standing position with your head erect and your eyes on the frame pad.
2. Swing your arms forward and up in a circular motion.
3. Bring your feet together and point your toes downward while in the air.
4. Keep your feet about 15 inches apart when landing on the mat.

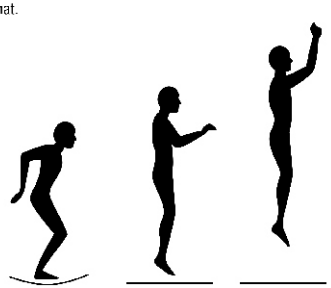

Lesson 2: Knee Drop

1. Start bouncing from a standing position, keeping your eyes on the frame pad.
2. Land on your knees, keeping your back straight and your body erect.
3. Come back up to an erect position.



Lesson 3: Hand and Knee Drop

1. Start bouncing from a standing position, keeping your eyes on the frame pad.
2. Land on the mat on your hands and knees.
3. Push with your hands and come back up to an erect position.

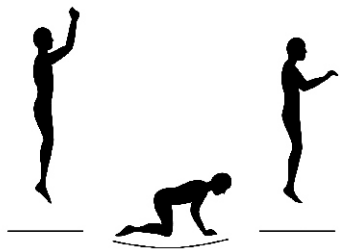

Lesson 4: Back Drop

1. Start from a low bounce and land on your back.
2. Keep your chin forward on your chest as you land.
3. Kick forward and up with your legs to return to an erect position.

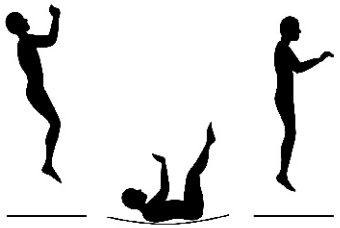

LADDER INSTALLATION

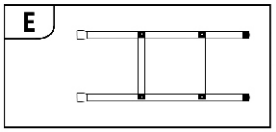

Ladder

	Name
1	Supports
2	Ladder Spreader
3、4	Fasteners

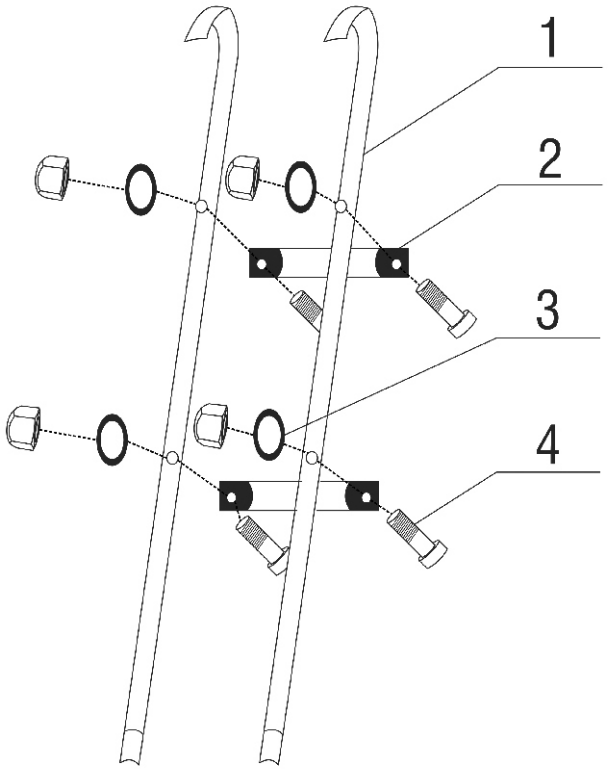

⚠ WARNING ⚠

To avoid the risk of injury,please be sure to follow the installationinstructions of the ladder.

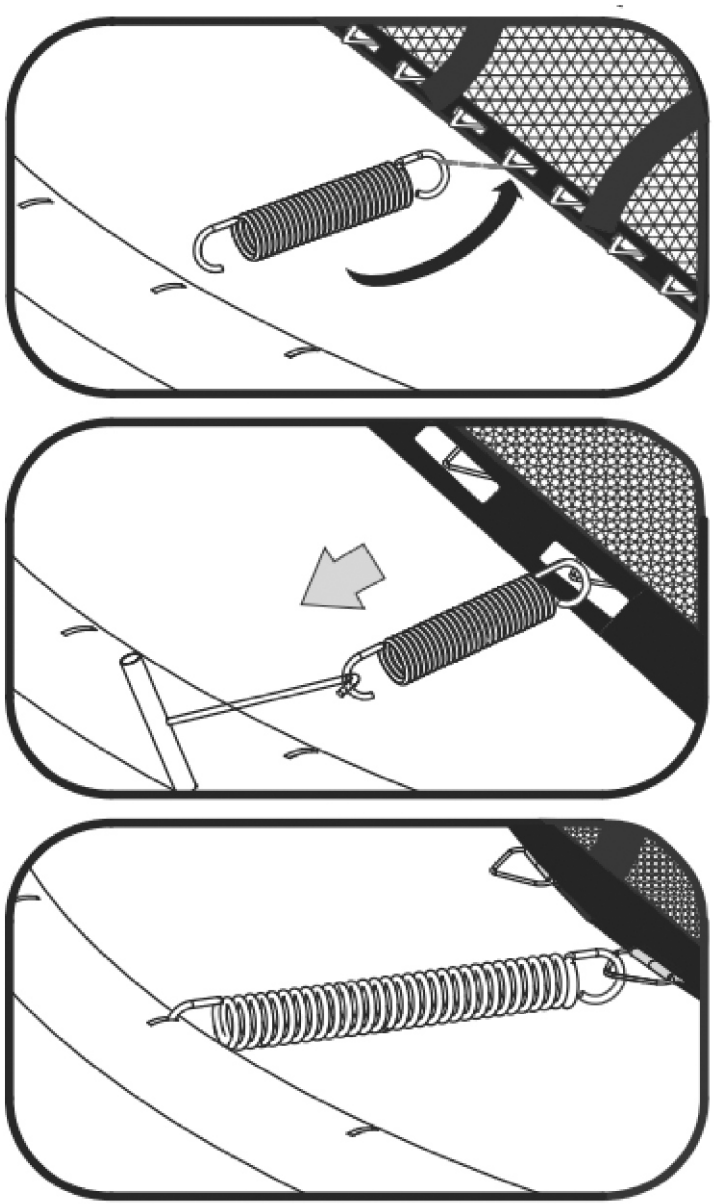

INSTRUCTIONS & MODEL LESSONS

Lesson 5: Seat Drop

1. Land in a sitting position with your legs parallel to the mat.
2. Place your hands on the mat beside your hips.
3. Push with your hands to return to an erect position.

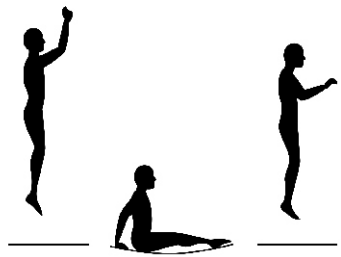

Lesson 6: Front Drop

1. Start from a low bounce and land on the mat in a prone position.
2. Keep your head up and your arms extended forward on the mat.
3. Push with your arms to return to an erect position.

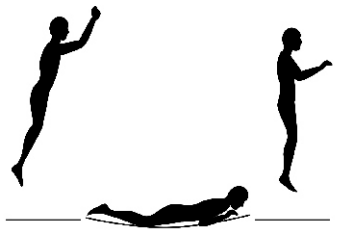

Lesson 7: Half Turntable

1. Start from the front drop position and push to the left or right with your arms turning your body in the opposite direction.
2. Turn your head and shoulders toward the direction that your body is turning.
3. Keep your back parallel to the mat and your head up.
4. After completing a half turn, land in the front drop position.

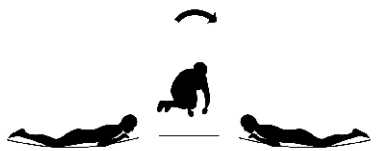

Lesson 8: Swivel Hips

1. Start with a seat drop.
2. Turn your head to the left or right and swing your arms up in the same direction.
3. Turn your hips in the same direction as your head and arms, completing a twist.
4. Land in the seat drop position.
5. Keep your back parallel to the mat and your head up.
6. After completing a half turn, land in the front drop position.



Once each of lessons are learned, the student should now be encouraged to design and organize routines, with emphasis on good form. The instructor may judge or grade students and arrange groupings for further instruction accordingly.

To stimulate interest in competition, the game of "Trampoline Horse" can be introduced. Before the game begins, students must count off. To start the game, student number 1 performs a stunt. Student number 2 then mounts the trampoline, performs the same stunt and adds a second stunt. Student number 3 mounts and performs stunts 1 and 2 and adds a third stunt. Thus the series of stunts is continuously lengthened. The first person to miss a stunt in the series assumes the letter "H" and starts a new series with a stunt. If a person misses again, he assumes the letter "O." When a person accumulates "H-O-R-S-E," he or she is eliminated from the game. The last remaining contestant is the winner. Lesson planning from this point on should be facilitated by contacting a certified trampoline instructor

TRAMPOLINE SAFETY INFORMATION

In trampoline use, as in all active recreational sports, participants can be injured. However, there are steps that can be taken to reduce risk of injury. In this section, primary accident patterns are identified and the responsibilities of supervisors and jumpers in accident prevention are described.

ACCIDENT CLASSIFICATION

Somersaults (flips): Landing on your head or neck, even in the middle of the trampoline mat, increases the risk of a broken back or neck, which can result in paralysis or death. Such events can occur when a jumper makes an error trying to perform a forward or backward somersault (flip). Do not perform somersaults(flips) on this backyard trampoline.

Multiple Jumpers: More than one jumper at a time on the trampoline increases the chance of a jumper becoming injured by losing control of his or her jump. Jumpers may collide with one another, fall off of the trampoline, fall onto or through the springs, or land incorrectly on the mat. The jumper weighing the least is the jumper most likely to be injured.

Mounting and Dismounting (Getting on and off): The trampoline mat is several feet above ground level. Jumping from the trampoline to the ground or any other surface may result in injury. Jumping onto the trampoline from a roof, deck, or other objects also presents a risk of injury. Smaller children may need assistance getting onto or down from the trampoline. Climb carefully onto and off of the trampoline. Do not step onto the springs or the fame pad. Do not grasp the frame pad to pull yourself onto the trampoline.

Striking the Frame or the Springs: Injury may result from hitting the frame or falling through the springs while jumping or getting onto or off of the trampoline. Stay in the center of the mat when jumping. Be sure to keep the frame pad in place to cover the fame. The frame pad is not made or intended to support the weight of trampoline user. Do not step or jump directly on the frame pad.

Loss of Control: Jumpers who lose control of their jumps may land on the mat incorrectly, land on the frame or springs, or fall off of the trampoline. A controlled jump is one where the landing is in the same spot as the takeoff. Before learning a more difficult stunt, you should be able to do one over an over with control. Attempting a stunt beyond present skill levels increases the chance of loss of control. To regain control and stop your jump bend your knees sharply when you land.

Alcohol or Drug Use: The chance of injury increases when a jumper has consumed alcohol or taken drugs. These substances impair a person's reaction time, judgment, and physical coordination.

Encountering Objects: Jumping on a trampoline while other people, pets, or objects are underneath it will increase the chance of getting hurt. Jumping while holding or having an object on the trampoline, particularly one that is sharp or breakable, will increase the chance of injury. Placing a trampoline too close to overhead electrical wires, tree limbs, or other objects can increase the chance of injury.

Poor Maintenance of The Trampoline: Jumpers may be injured if a trampoline is in poor condition. A torn mat, bent frame, broken spring, or missing frame pad, for example, should be replaced before anyone is allowed to jump. Inspect the trampoline before each use.

Weather Conditions: A wet trampoline is too slippery for safe jumping. Gusty or high winds can cause jumpers to lose control. To reduce the chance of injury, use the trampoline only when the weather is good.

Access: To prevent access to the trampoline by unsupervised smaller children, the optional access ladder should always be taken away and stored in a safe place when the trampoline is not in use.

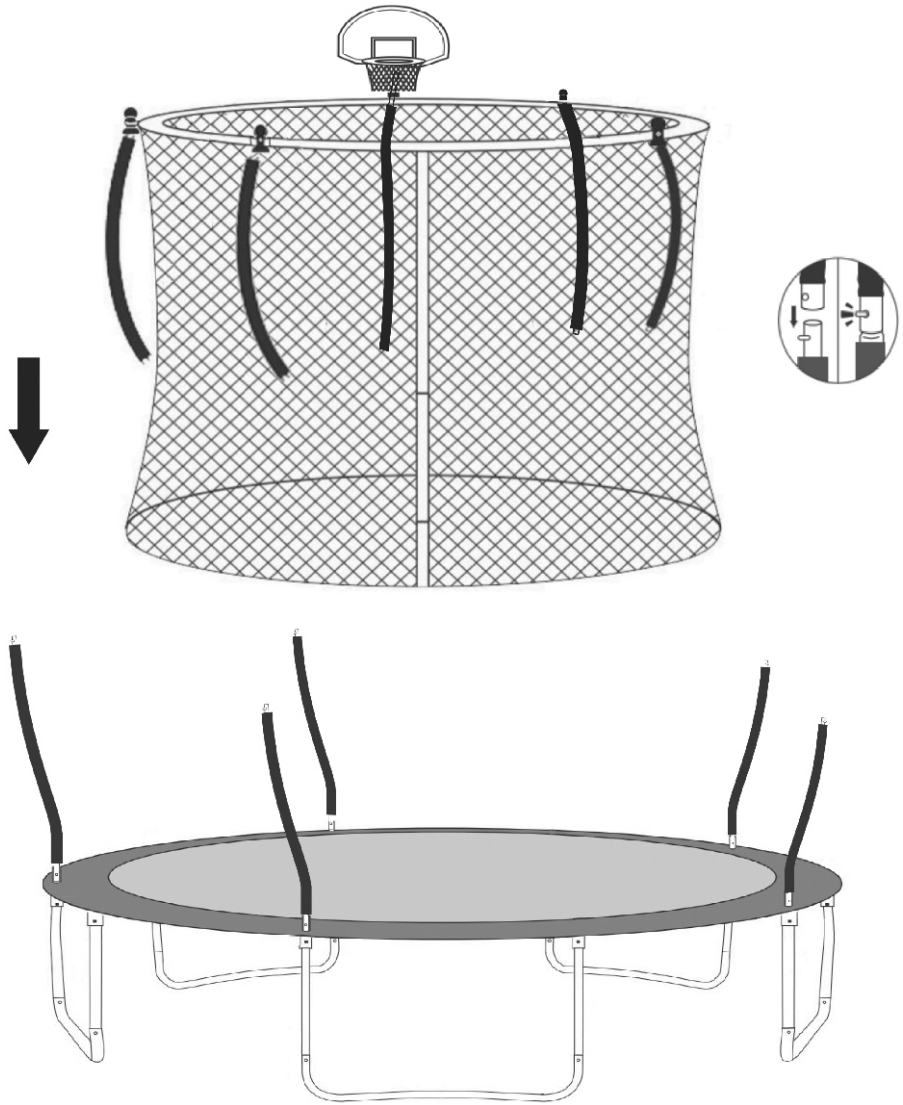

UPPER SAFETY POLE & NET INSTALLATION

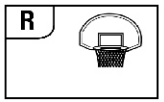

Basketball Board



ENCLOSURE SAFETY INFORMATION

NEED FOR TRAMPOLINE ENCLOSURE SAFETY

A trampoline enclosure is a recreational product. The information on this page identifies important safety precautions. The precautions are not all-inclusive, because an enclosure can be used in ways that this manual cannot cover completely.

To prevent pinches and cuts during enclosure use, a frame pad must be installed on the trampoline. The frame pad must be placed on the trampoline before the enclosure is erected.The frame pad reduces the chance of injury from accidental contact with the springs and frame.

USING THE ENCLOSURE SAFELY

Adult Supervision of Children

Children using a trampoline with a trampoline enclosure must be supervised by adults. Young children must be supervised constantly. Adults must pay particular attention to:

- Things that children bring into the enclosure
- Children's activities inside the enclosure
- Conditions inside the enclosure while children are using it
- The way children enter and exit the enclosure

Additional details of safety enclosure use are described below:

Electrocution Hazard Associated with the Metal Frame of the Trampoline and Enclosure

The trampoline and enclosure frames are made of galvanized steel. They are not grounded and will conduct electricity. For this reason, an electrocution hazard exists. No lights, electric heaters, extension cords, or household electrical appliances are to be permitted on the trampoline or in the enclosure at any time.

Hazards Associated with Entering and Exiting the Trampoline Enclosure

A trampoline enclosure installed on a trampoline is raised off the ground. The height of the enclosure increases the risk of a fall when a jumper is entering or leaving the enclosure. Young children especially may have difficulty entering and exiting the enclosure. To reduce the risk of falling, always help young children to get into and out of the enclosure.

Enter and exit the trampoline enclosure only through the door of the enclosure (the opening in the netting walls). The trampoline mat (bed) and the netting walls of the enclosure are separate pieces. No jumper, especially young children, should ever leave the enclosure by going out between the mat and the netting walls. Trying to get out this way creates a risk of choking from being caught between the trampoline frame and the netting walls.

Darkness increases the chances of a fall when a jumper is entering or leaving the enclosure. Do not use the trampoline unless there is plenty of lighting provided.

Hazards Associated with Animals, Sharp or Breakable Objects

To avoid damage to the trampoline enclosure and the trampoline, do not allow pets or other animals inside of the enclosure. The claws and teeth of animals can damage the netting. Do not jump on the trampoline while holding or wearing a sharp or breakable object.

METHODS OF ACCIDENT PREVENTION

THE SUPERVISOR'S ROLE IN PREVENTING ACCIDENTS

It is the responsibility of the supervisors of trampoline users to provide knowledgeable and mature supervision. They need to know and enforce all of the rules and warnings printed in this manual to minimize the likelihood of accidents and injuries. They also need to inform users of these rules. During periods of time when supervision is unavailable or inadequate, this may require that the trampoline is taken down, placed in a secure area, or otherwise secured against unauthorized use. Another option that may be considered is covering the trampoline with a heavy tarp that can be secured with locks and chains. It is the responsibility of the supervisor to make sure that the placard with trampoline safety instructions is kept posted on the trampoline and that jumpers are informed about these instructions.

THE JUMPER'S ROLE IN PREVENTING ACCIDENTS

Education on the part of the user is a must for safety. Users must first learn a low, controlled bounce and then learn the basic landing positions and combinations before proceeding to intermediate skills. Jumpers must understand why they have to master "control" before they can start thinking about other moves. Understanding the proper progression of skills in jumping on a trampoline must be the first lesson. Review this manual to learn about the basic techniques for using the trampoline. Follow the rules on the placard with trampoline safety instructions
For further information or additional instructional materials, contact a certified trampoline instructor.

TRAMPOLINE SAFETY INSTRUCTIONS

For the Supervisor

Read the instructions before using the trampoline. Enforce all of the safety rules. Become familiar with the information in this manual so you can help new users learn basic jumps and all users follow trampoline safety. All trampoline users must have mature, knowledgeable supervision, regardless of their skill or age. This trampoline is not recommended for use by children under 6 years of age. Inspect the trampoline before using it. Do not use the trampoline without the frame pad securely in place to cover the frame. Do not use the trampoline in wet or windy conditions. A worn or damaged mat, spring, or frame piece should be replaced immediately.

Jumping

Learn fundamental jumps and body positions thoroughly before trying more advanced skills. Know your own limits in performing each of the trampoline jumps. Study this manual to learn how to do basic jumps. Stop your bounce by flexing your knees as your feet come in contact with the trampoline mat. Learn this skill before attempting any others.

HAZARDS ASSOCIATED WITH HIGH WINDS

A trampoline with an enclosure can be moved or blown over by high winds. Anyone in its path, or inside of the enclosure, may be injured if this happens. If you expect high winds, take down the enclosure netting and stake the trampoline frame to the ground, or move the trampoline and enclosure to a sheltered location. The only sure method to protect your trampoline and the surrounding environment during high winds is to completely disassemble the unit and store indoors. Damage due to wind or weather is not warranted.

BASKETBALL HOOP INSTALLATION

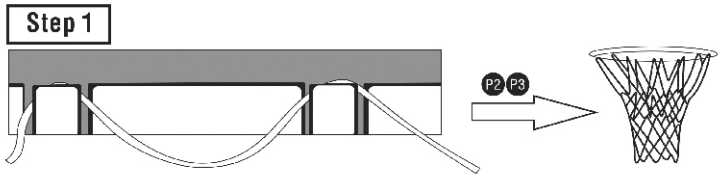

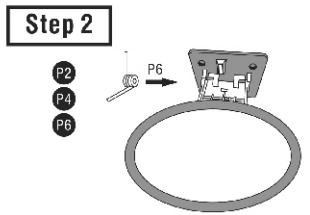

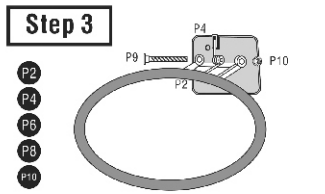

*It has the certain positions at P2 and P4 for the spring P6.

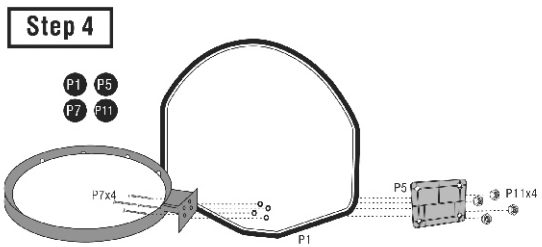

Note:Make sure the side of which could set the nuts of P5 face outside once assembly.

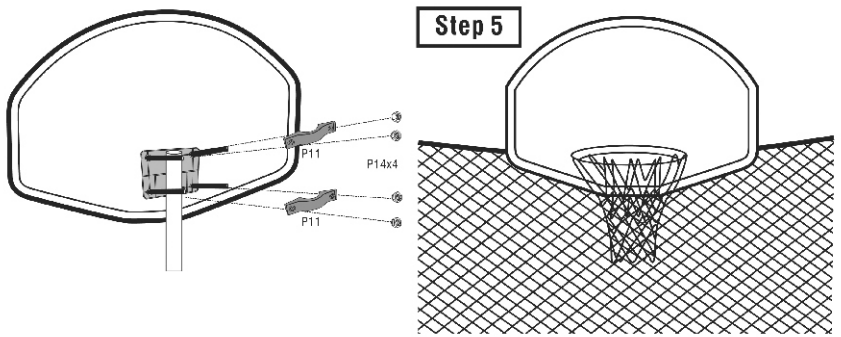

BASKETBALL HOOP INSTALLATION

P1 Backboard x1

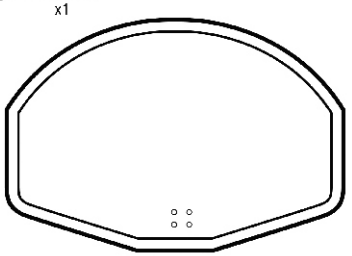

P2 Ring x1

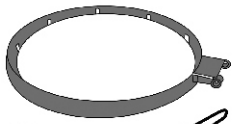

P3 Net x1

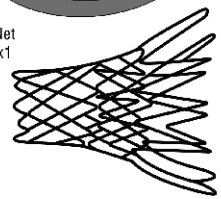

P4 Ring Connection X1



P5 Back Connection x1

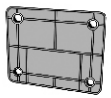

P6 Spring x1



P7 Bolt M8x90mm x4



P8 Bolt M5x60mm x1



P9 Clamp x2



P10 Nut M5 x1



P11 Nut M8 x8

Note: Safety consideration the part of P4 is breakable under some certain circumstances, keep the extra piece of P4,this is the replacement once accident happens.

12FT PART LIST

	Name	Pic	Qty
A	Top Rail	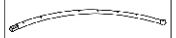	x10
B1	Crossing Section		x5
B2	T-Section		x5
C	Spring pad		x1
D	Jumping Mat	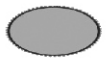	x1
E	Ladder	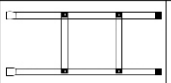	x1
F	U-Shapped Leg		x5
G	Leg Extension		x10
H	Lower Safety Pole		x5
I	Upper Safety Pole		x4
I.	Longest Safety Pole		x1
J	Springs		x70

	Name	Pic	Qty
K	Enclosure Net	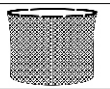	x1
L	Wrench Tool	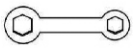	x1
M	M6 X 45 mm Screw		x30
N	Lock Nut		x30
O	Spring Fixing Tool	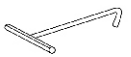	x1
P	Cap		x4
P_1	No Top Cap		x1
Q	Self-tapping Screws		x2
R	Basketball Board		x1
S	Screwdriver		x1
T	Ground hook	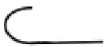	x10
U	Socks		x2
V	Washer		x31

14FT PART LIST

	Name	Pic	Qty
A	Top Rail		x10
B1	Crossing Section		x5
B2	T-Section		x5
C	Spring pad		x1
D	Jumping Mat		x1
E	Ladder		x1
F	U-Shapped Leg		x5
G	Leg Extension		x10
H	Lower Safety Pole		x5
I	Upper Safety Pole		x4
I.	Longest Safety Pole		x1
J	Springs		x80

	Name	Pic	Qty
K	Enclosure Net		x1
L	Wrench Tool		x1
M	M6 X 45 mm Screw		x30
N	Lock Nut		x30
O	Spring Fixing Tool		x1
P	Cap		x4
P_1	No Top Cap		x1
Q	Self-tapping Screws		x2
R	Basketball Board		x1
S	Screwdriver		x1
T	Ground hook		x10
U	Socks	JUMP JUMP	x2
V	Wahser		x31

UPPER SAFETY POLE & NET INSTALLATION

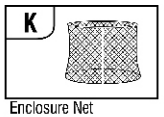

Enclosure Net

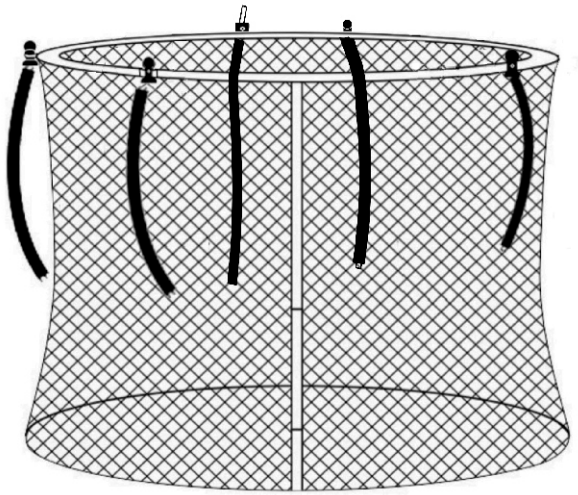

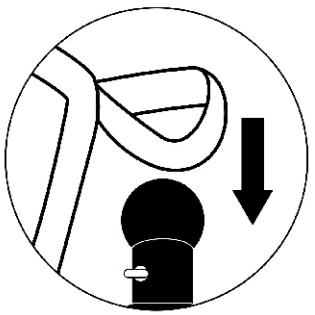

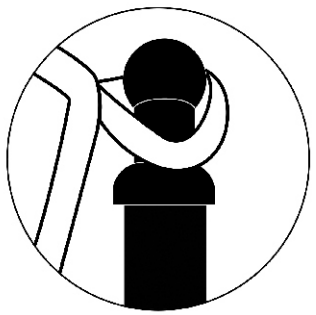

UPPER SAFETY POLE & NET INSTALLATION

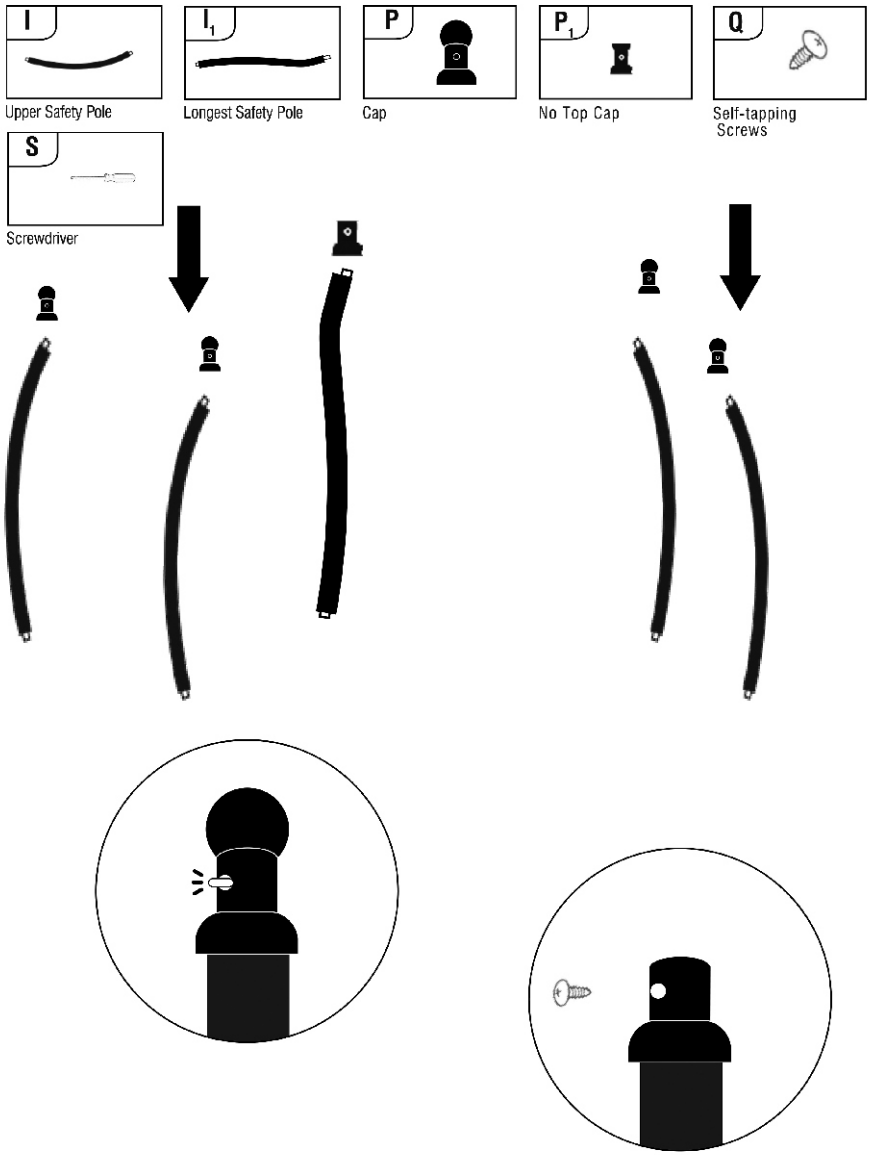

16FT PART LIST

	Name	Pic	Qty
A	Top Rail		x12
B1	Crossing Section		x6
B2	T-Section		x6
C	Spring pad		x1
D	Jumping Mat		x1
E	Ladder		x1
F	U-Shapped Leg		x6
G	Leg Extension		x12
H	Lower Safety Pole		x6
I	Upper Safety Pole		x5
I1	Longest Safety Pole		x1
J	Springs		x108

	Name	Pic	Qty
K	Enclosure Net		x1
L	Wrench Tool		x1
M	M6 X 45 mm Screw		x36
N	Lock Nut		x36
O	Spring Fixing Tool		x1
P	Cap		x5
P1	No Top Cap		x1
Q	Self-tapping Screws		x2
R	Basketball Board		x1
S	Screwdriver		x1
T	Ground hook		x12
U	Socks	JUMP JUMP	x2
V	Washer		x37

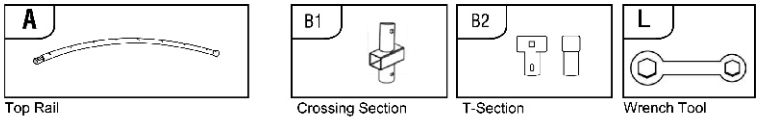

NOTE:Crossing Section(part B1) and T-section(part B2) are installed in turn.
Crossing Section is used to install the Lower Safety Pole.

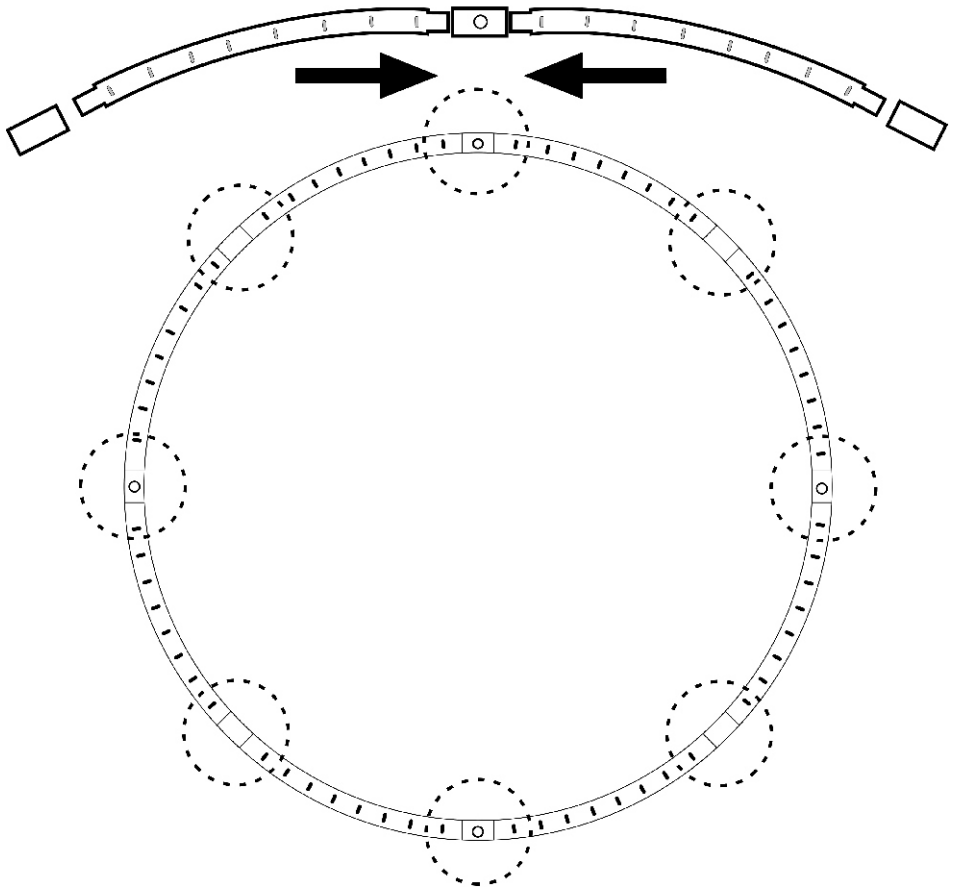

LOWER SAFETY POLE INSTALLATION

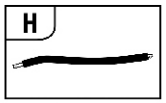

Lower Safety Pole

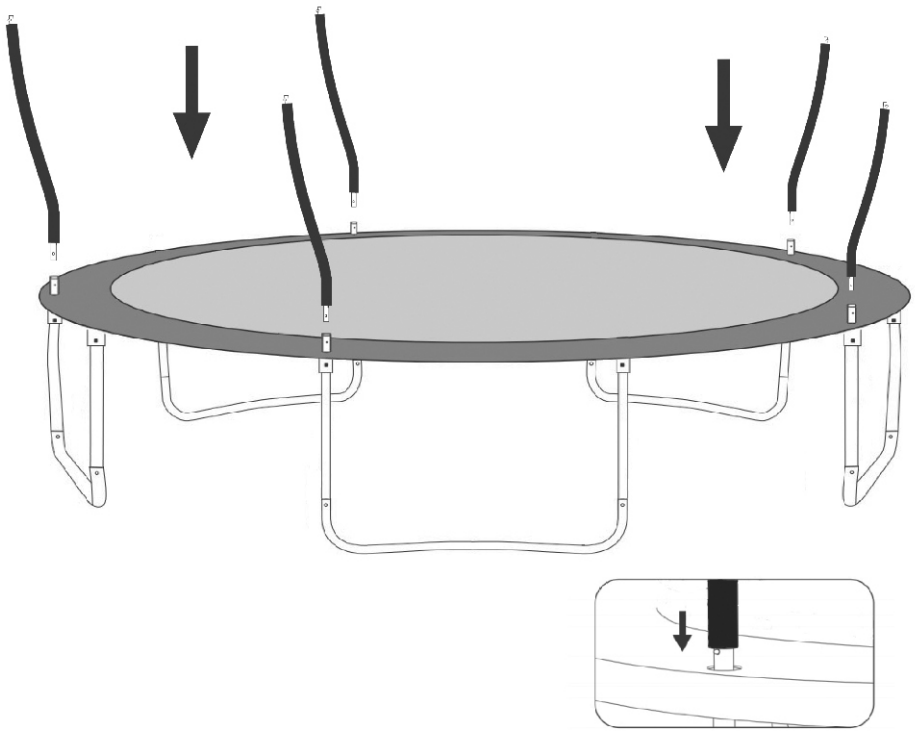

FRAME PAD INSTALLATION

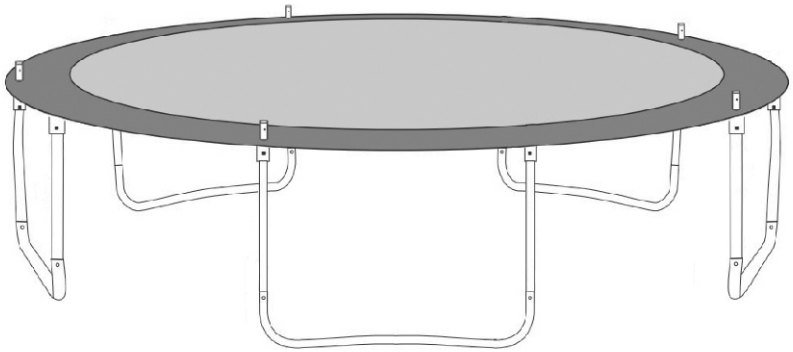

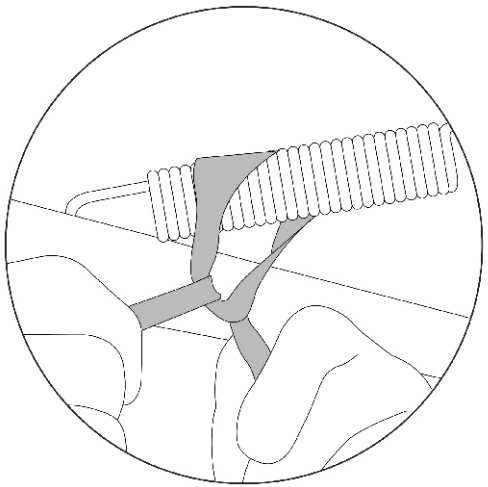

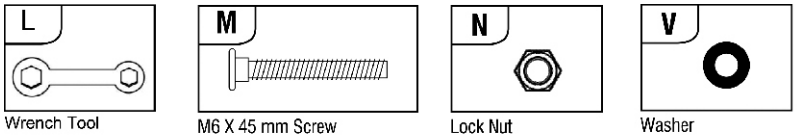

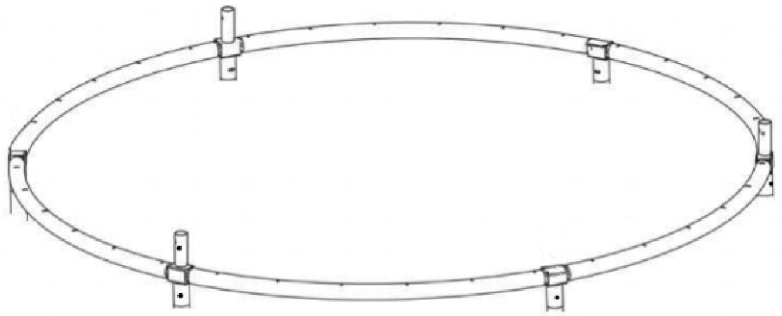

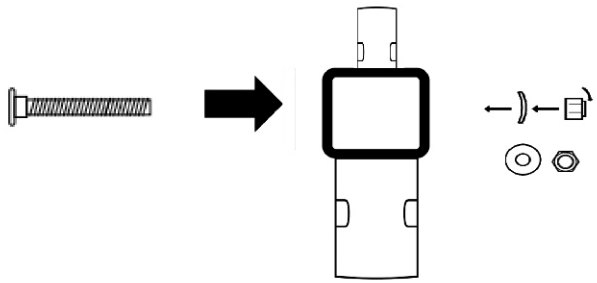

TRAMPOLINE ASSEMBLY INSTRUCTIONS

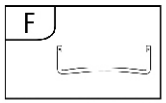

U-Shapped Leg

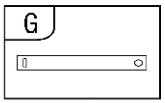

Leg Extension

Note:
12ft size= 5 legs
14ft size= 5 legs
16ft size= 6 legs

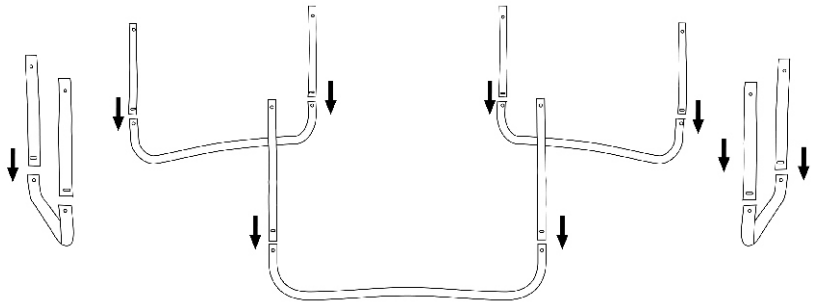

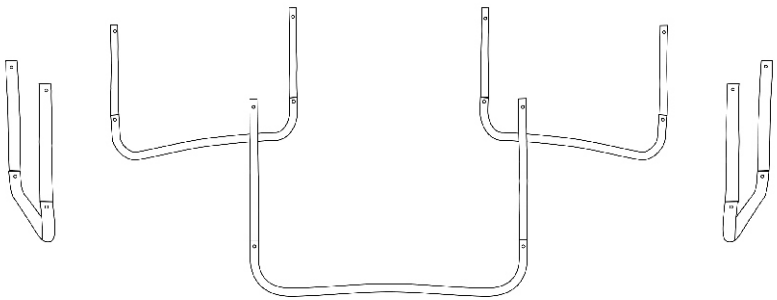

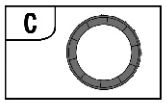

Spring pad

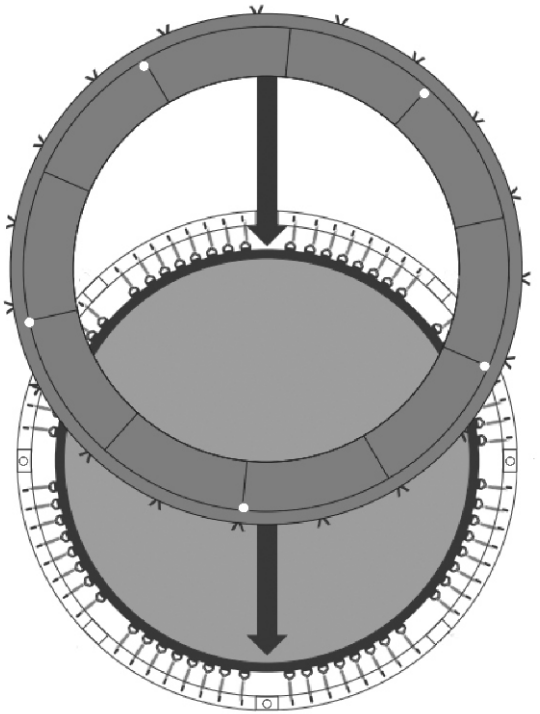

SPRING INSTALLATION ON JUMPING MAT

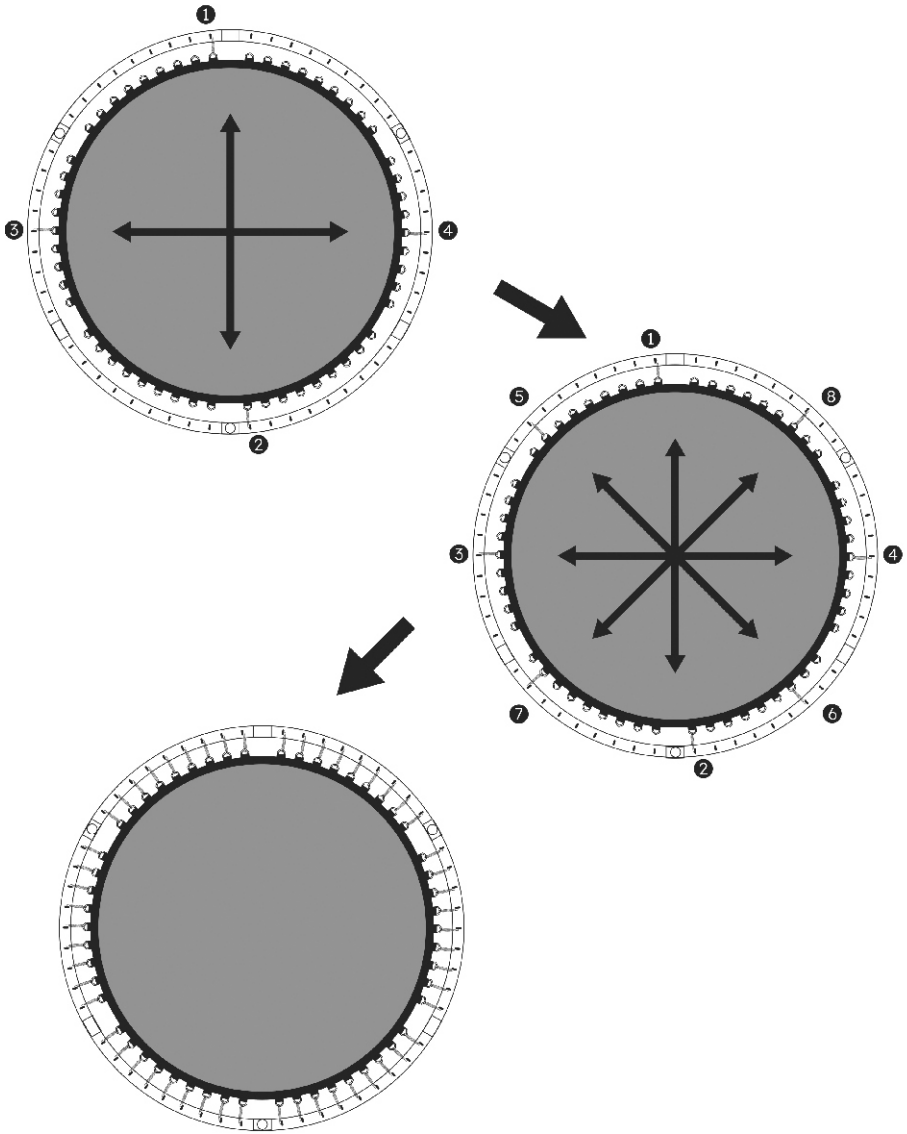

TRAMPOLINE ASSEMBLY INSTRUCTIONS

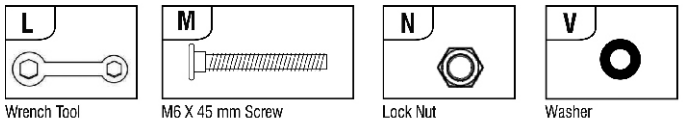

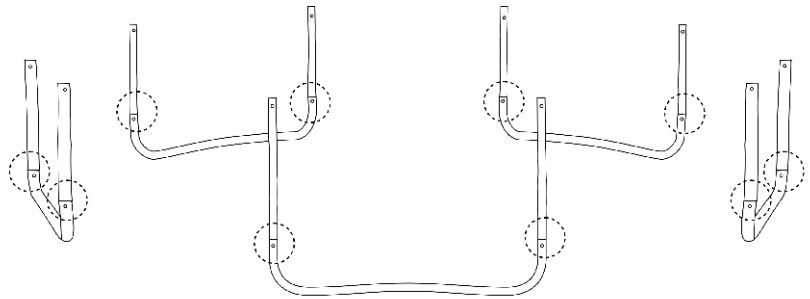

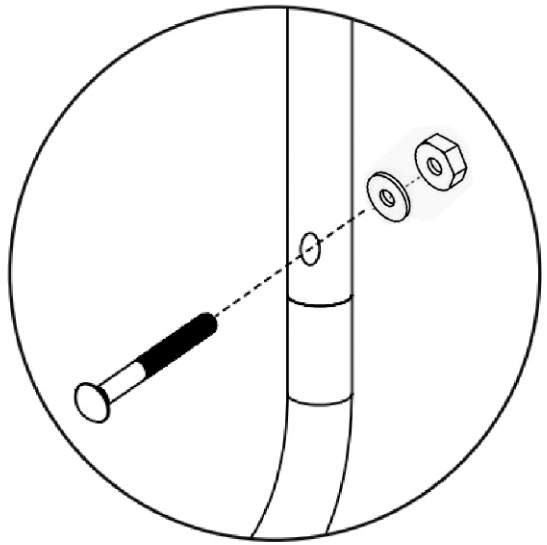

TRAMPOLINE ASSEMBLY INSTRUCTIONS

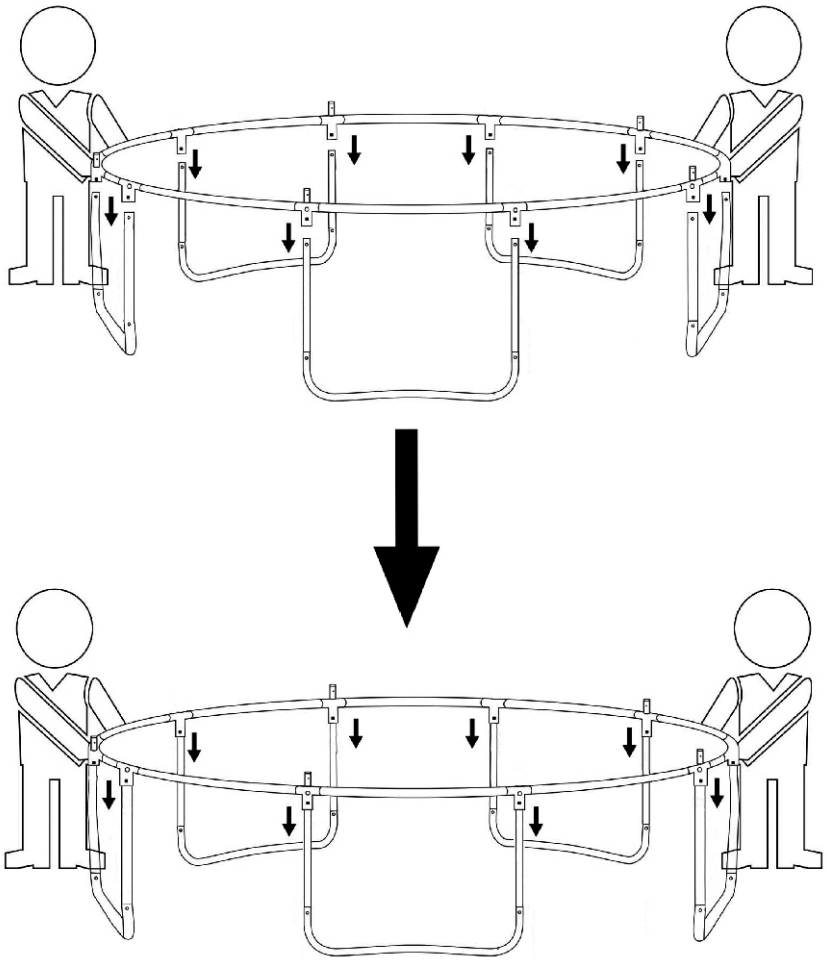

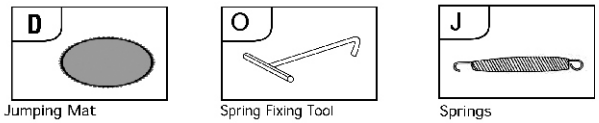

NOTE:Install the springs onto the top rail in the order indicated by the numbers.

