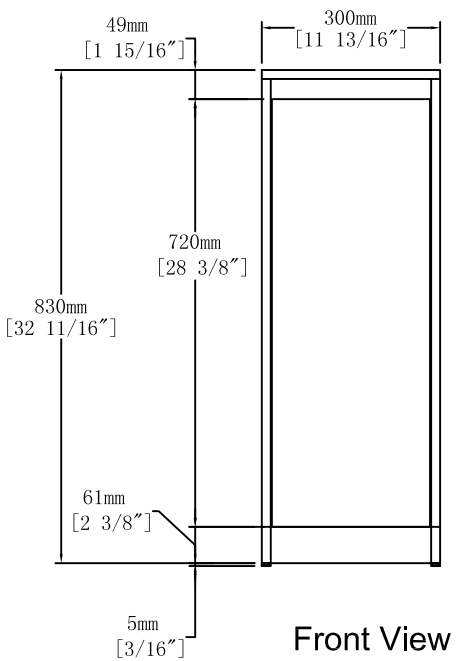

Front View

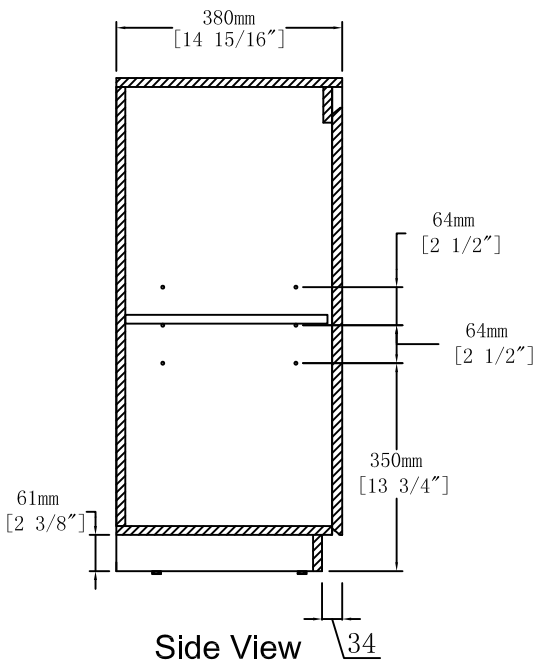

Side View

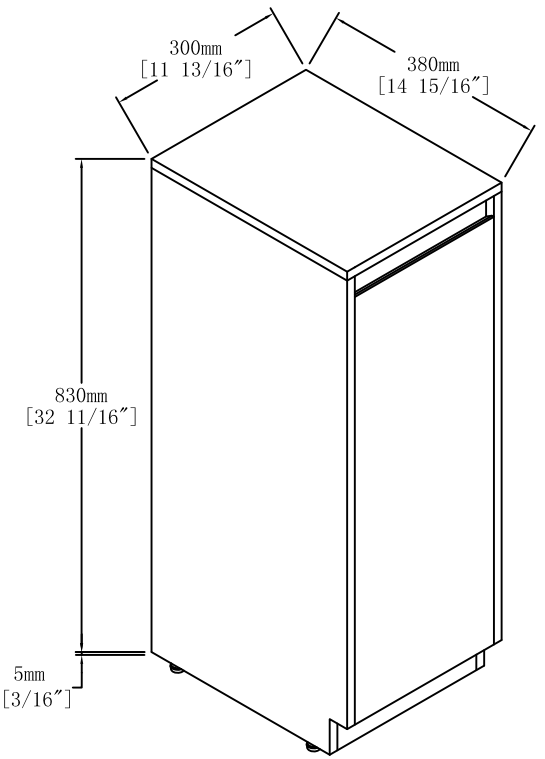

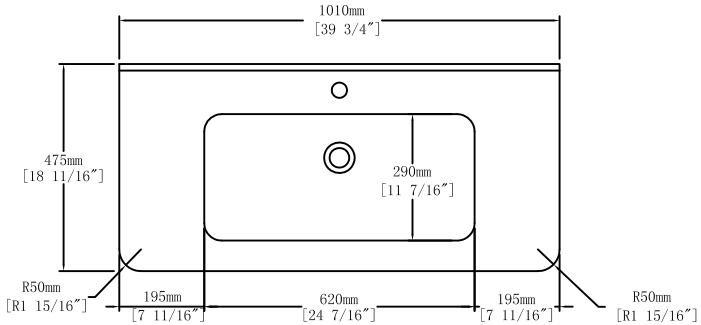

Top View

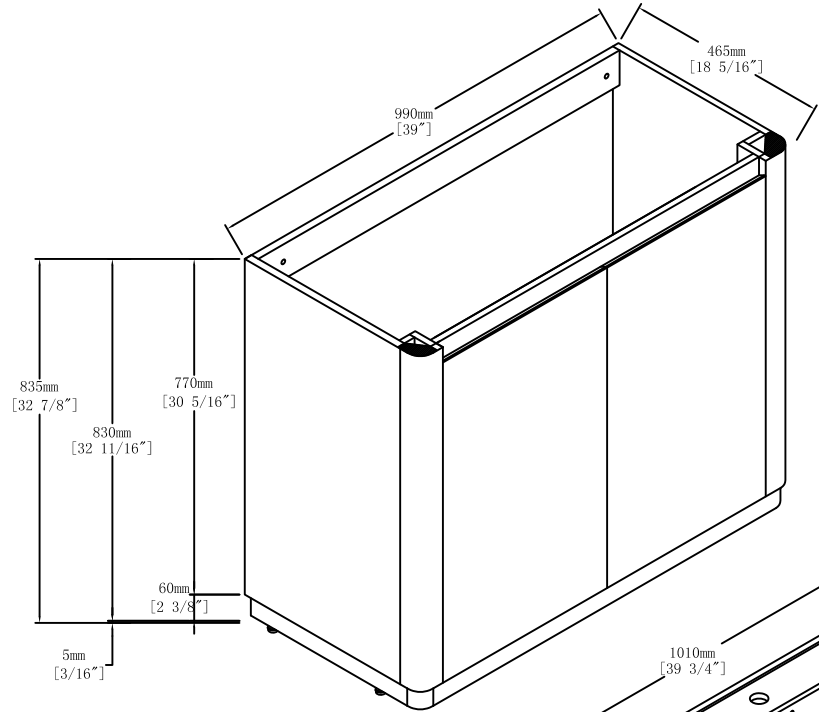

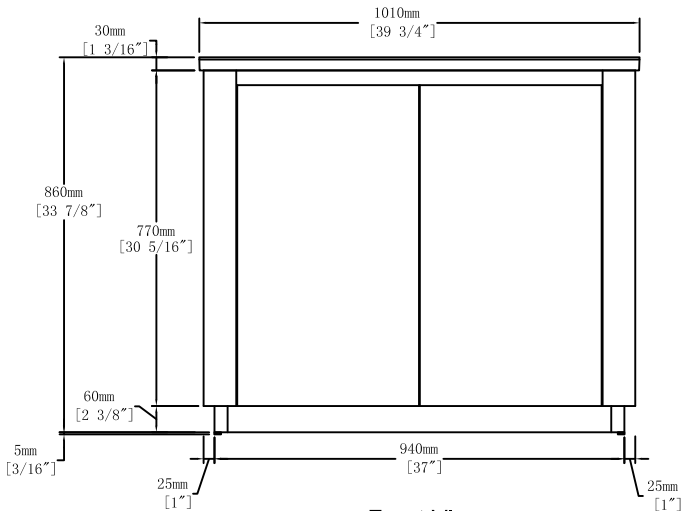

Front View

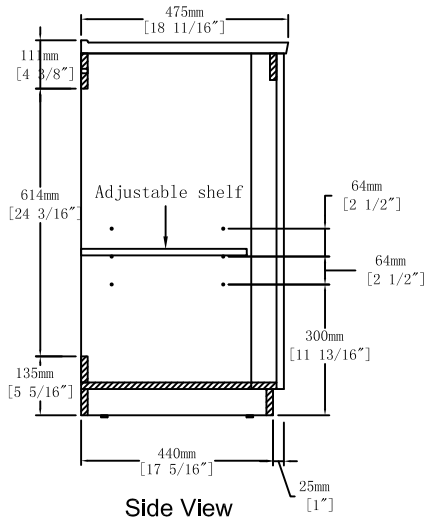
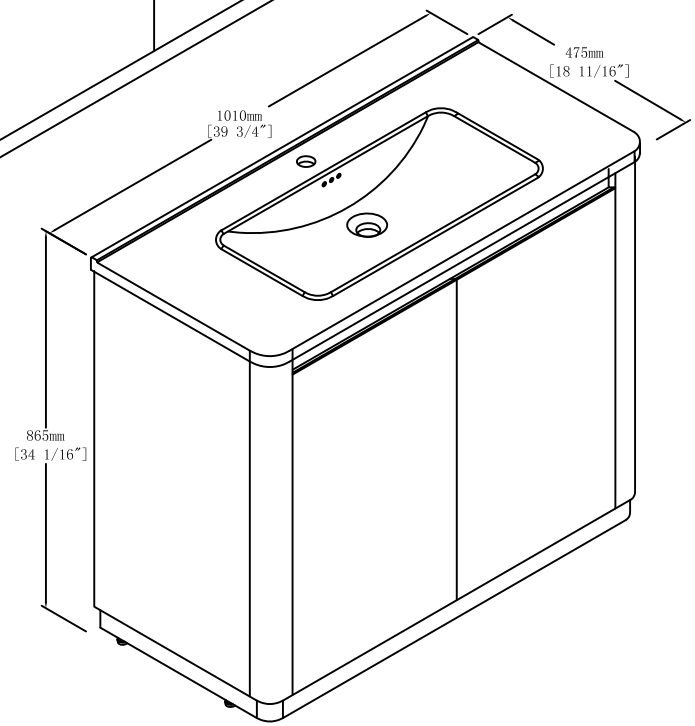
Side View