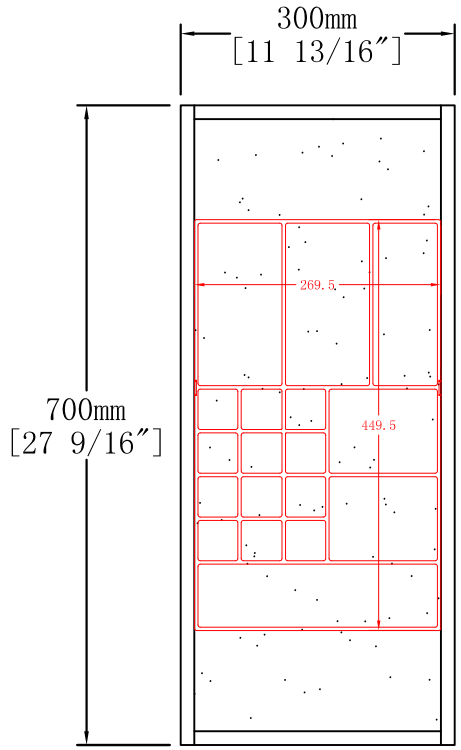

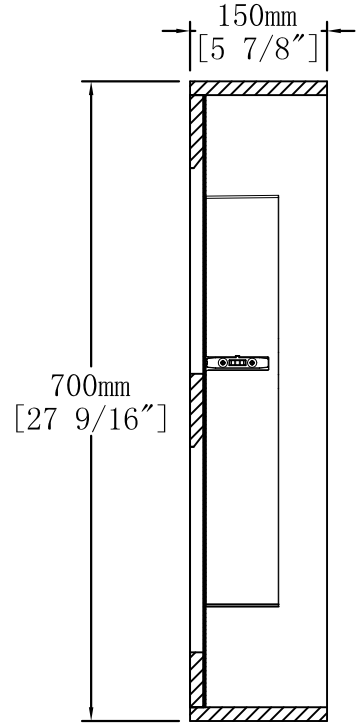

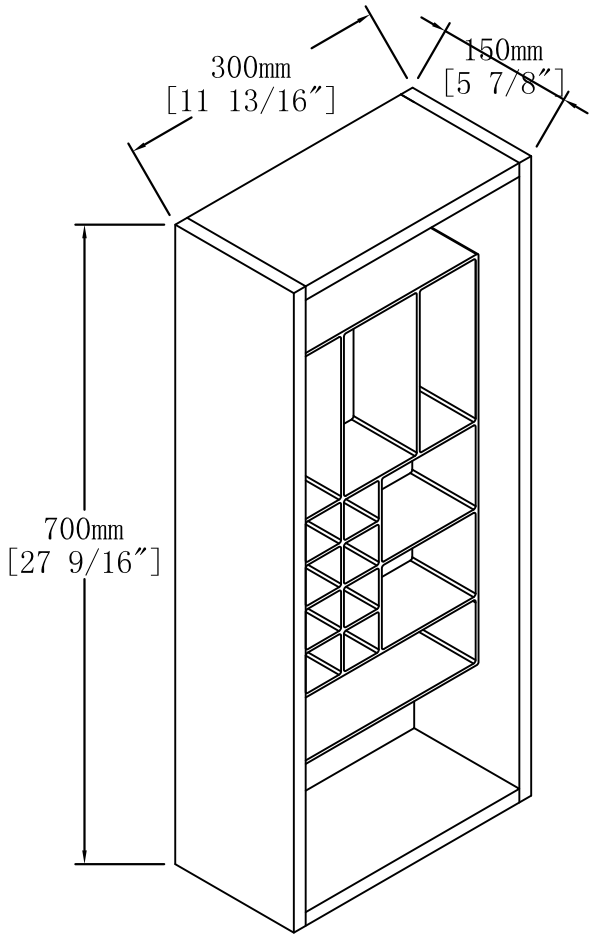

W3450	Item NO.	MC223F	Version	V1
	Project		Date	