User Manual

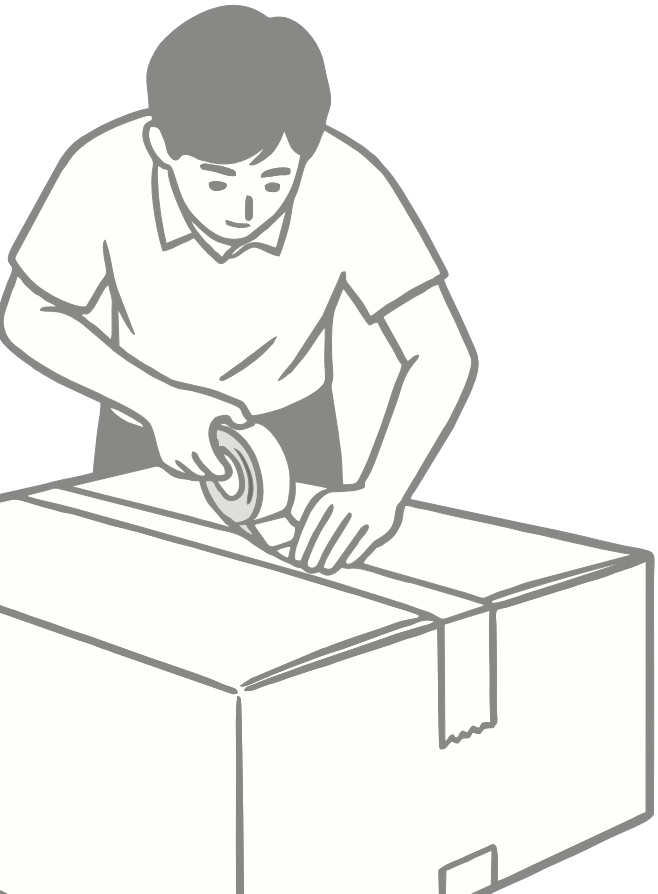

ASSEMBLY INSTRUCTION

❶

❷

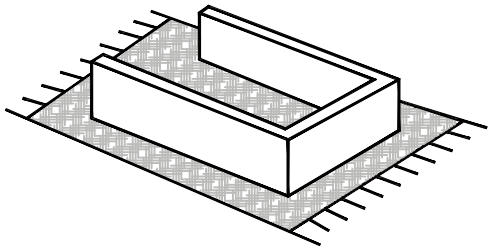

❸

❹

After unpacking, please confirm in time all the parts and hardware are included.

❺

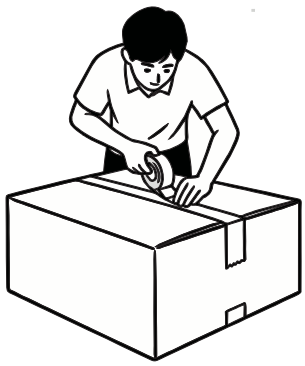

Please do not discard any packaging,if for any reason you need to return this product, it must be returned in its original packaging.

❻

AfterSales317@outlook.com

❼

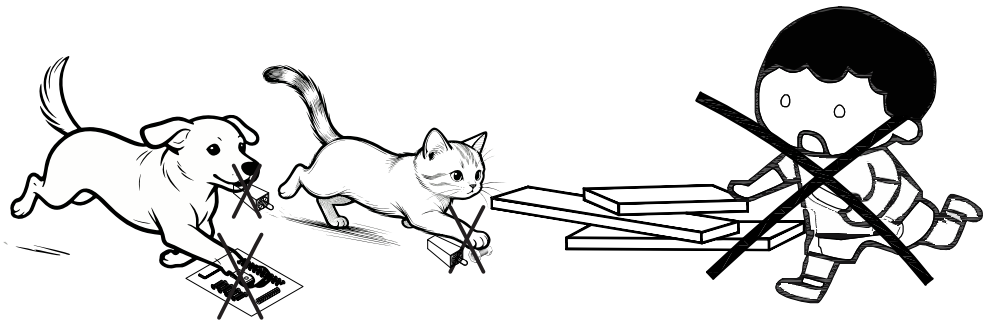

Unpacking Step

First layer

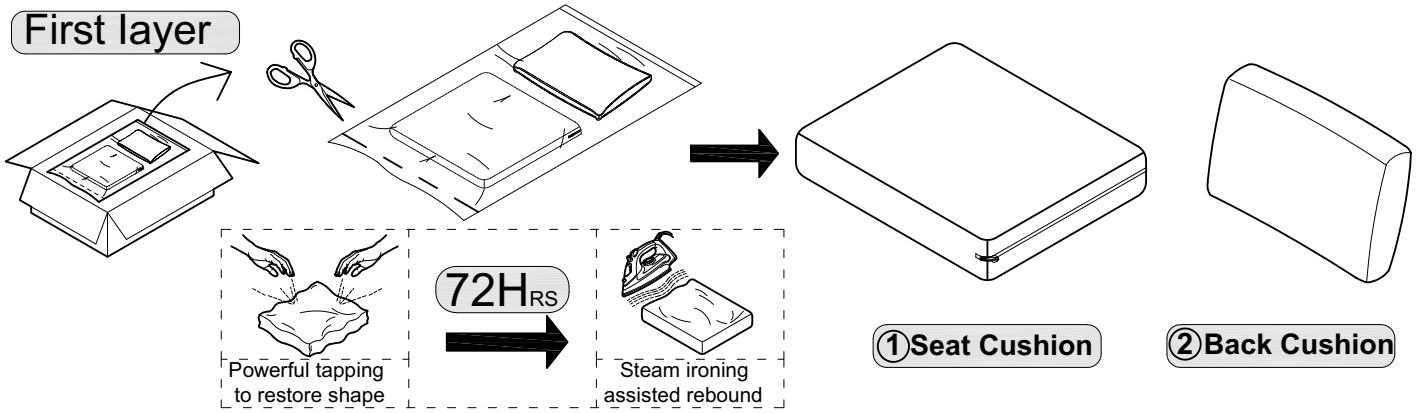

Second layer

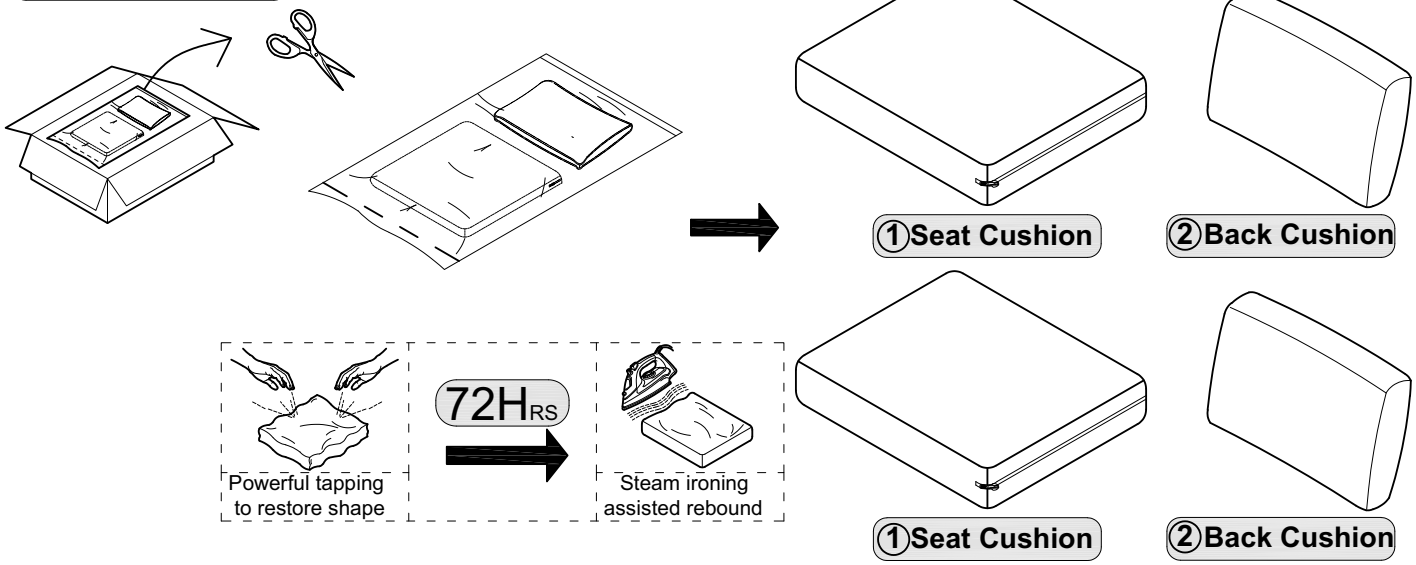

Third layer

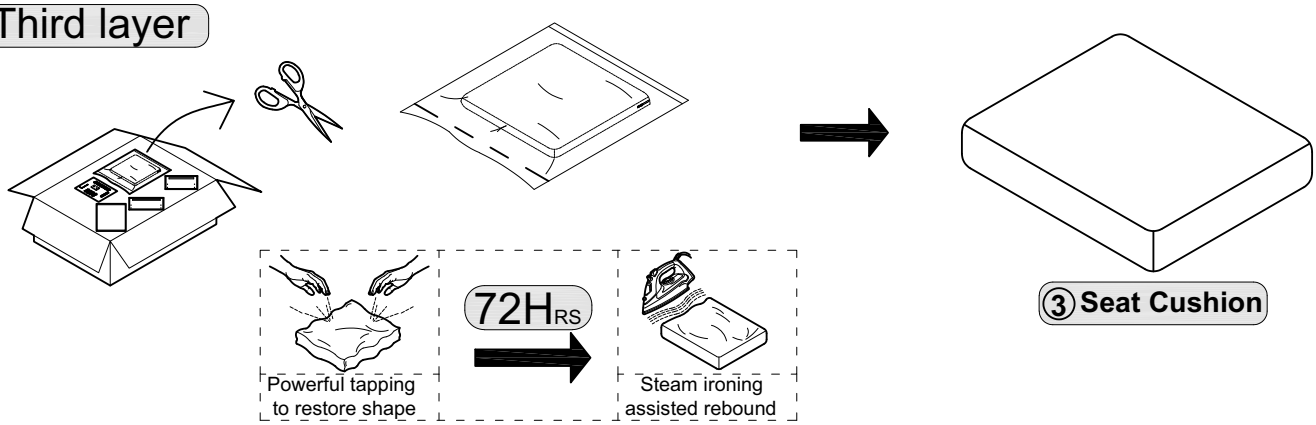

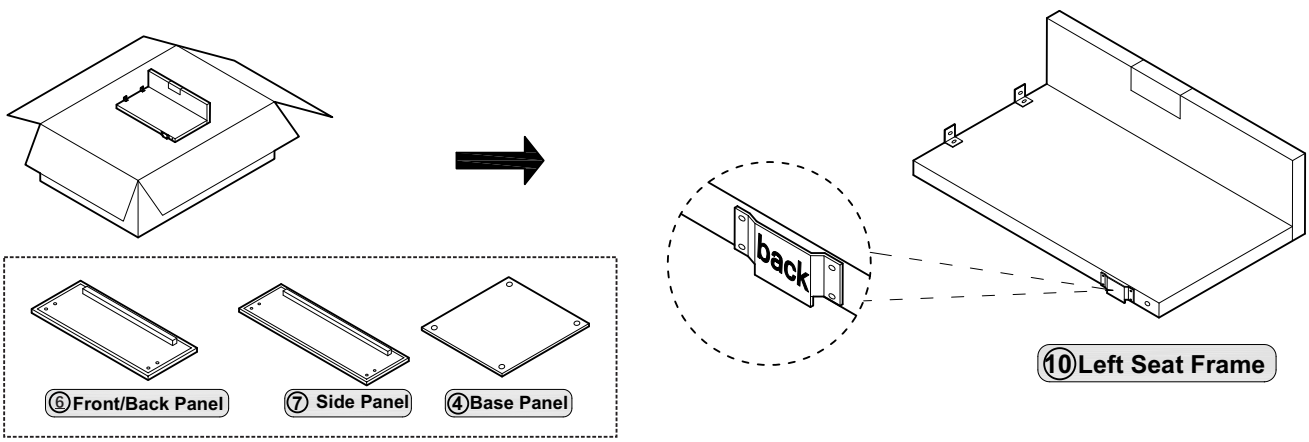

Fourth layer

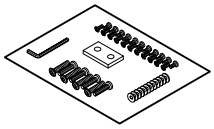

Blister hardware

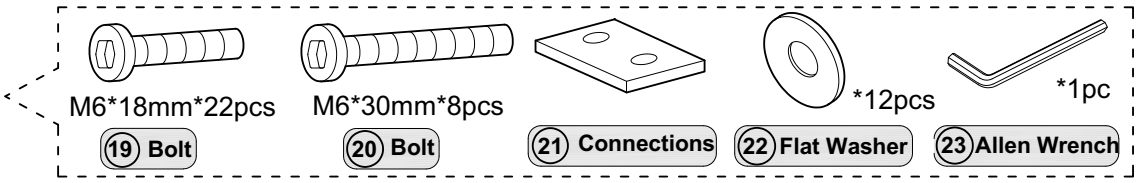

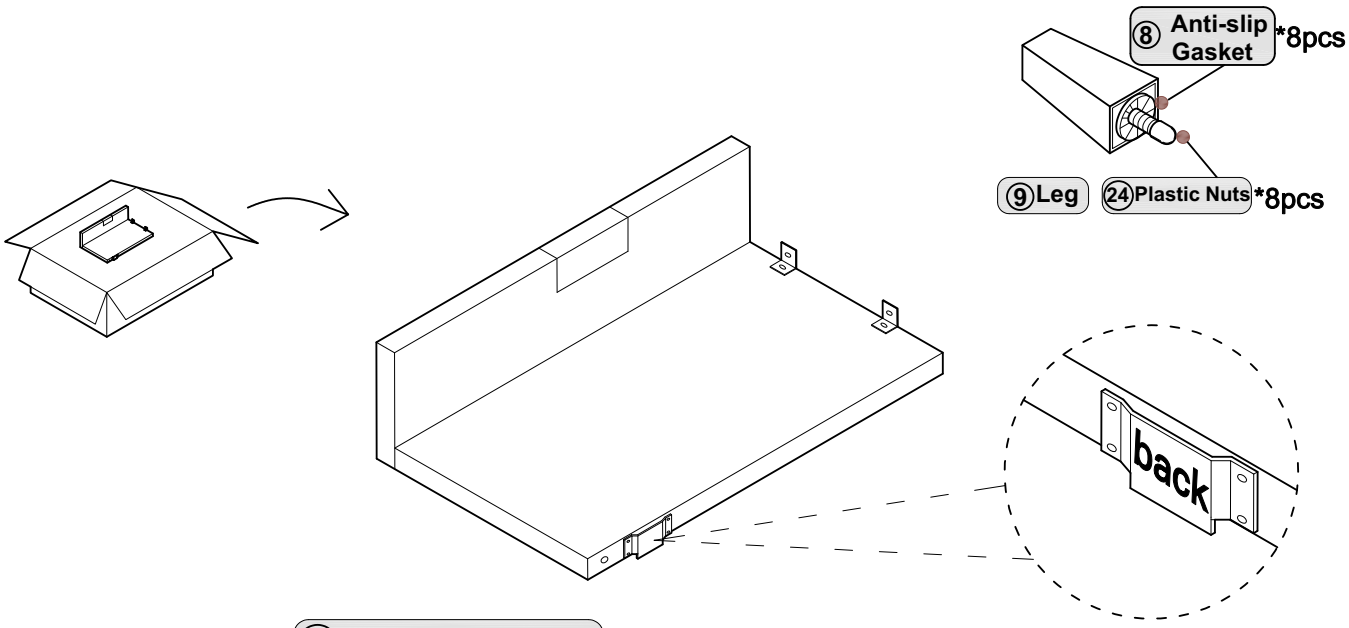

Fifth layer

The parts⑫/⑮/㉕/⑯/⑰/⑤/⑱ are hidden in left/right armrest.

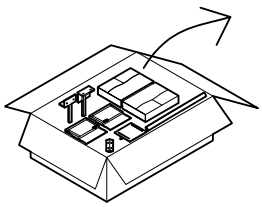

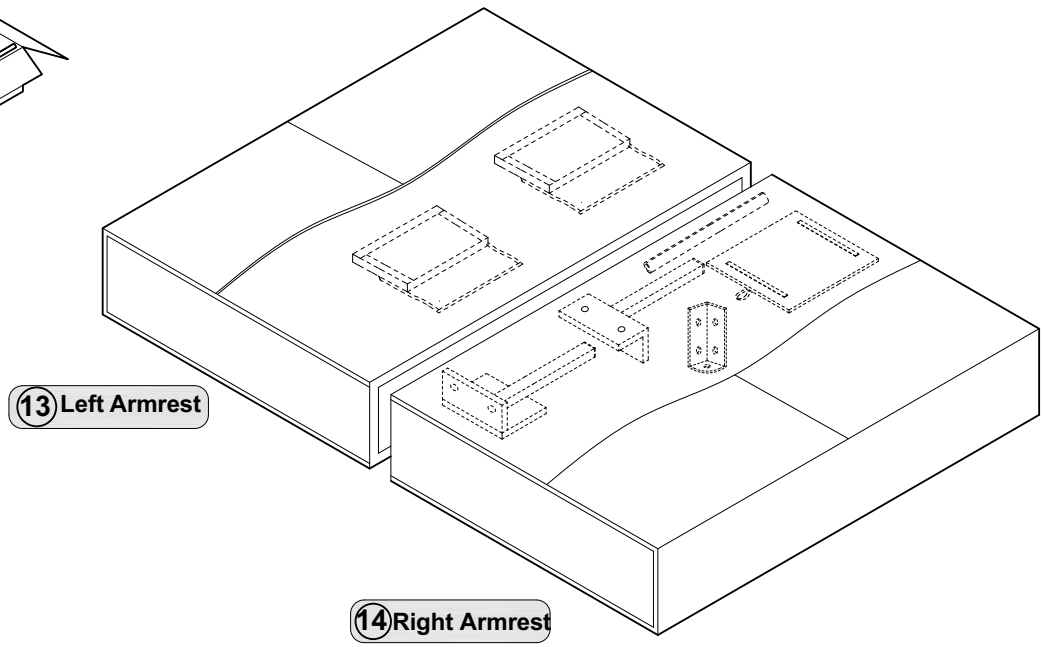

Past the left/right armrest ⑬/⑭ , pull out the parts ⑫/⑮/㉕/⑯/⑰/⑤/⑱ which are hidden in them.

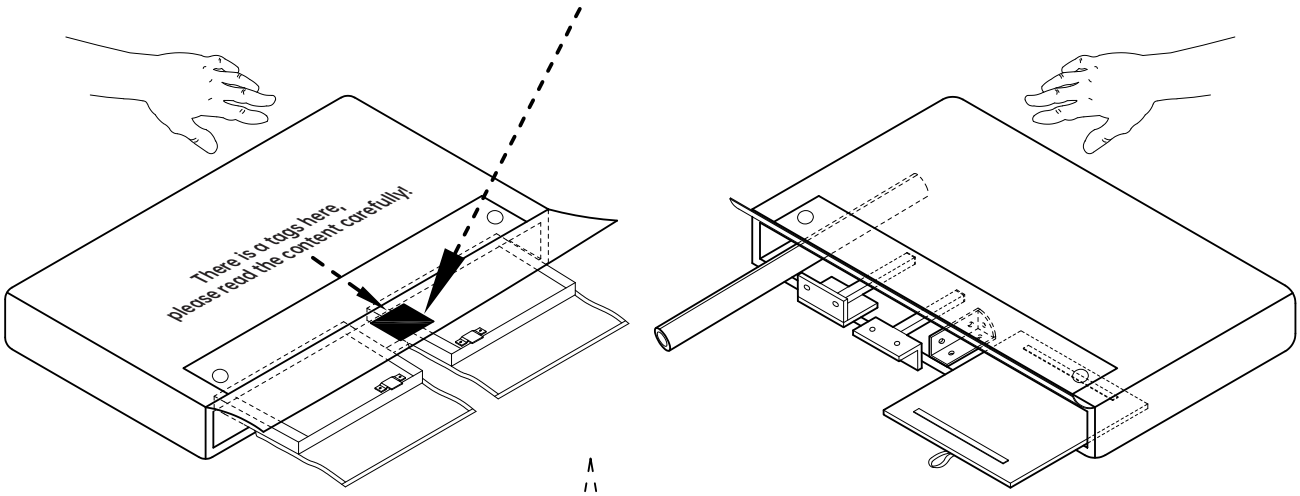

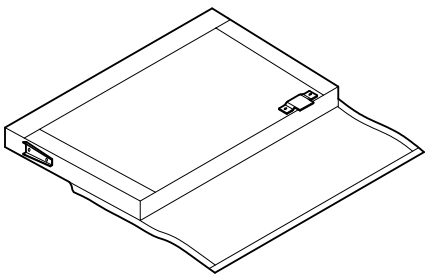

⑫ Left Bac Frame

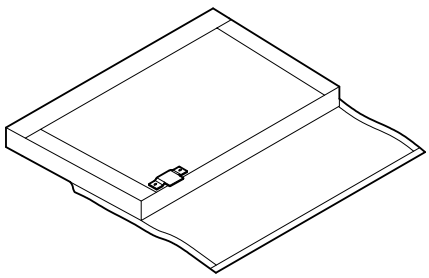

㉕ Right Bac Frame

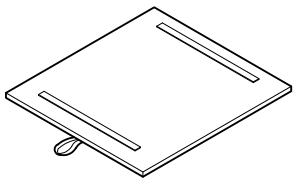

⑤Cover Panel

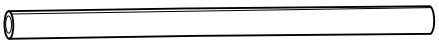

⑮Metal Pipe

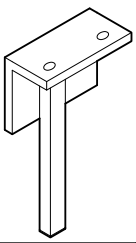

⑯Mid-Leg

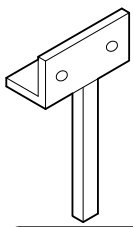

⑰Mid-Leg

*4pcs

⑱ Allen Iron

Installation Step

Step1

First screw the angle irons ⑱ on the front/back panel ⑥ using the bolts ⑲ and the allen wrench ㉓ ,then screw the angle irons ⑱ on the side panels ⑦ using the bolts ⑲ and the allen wrench ㉓.

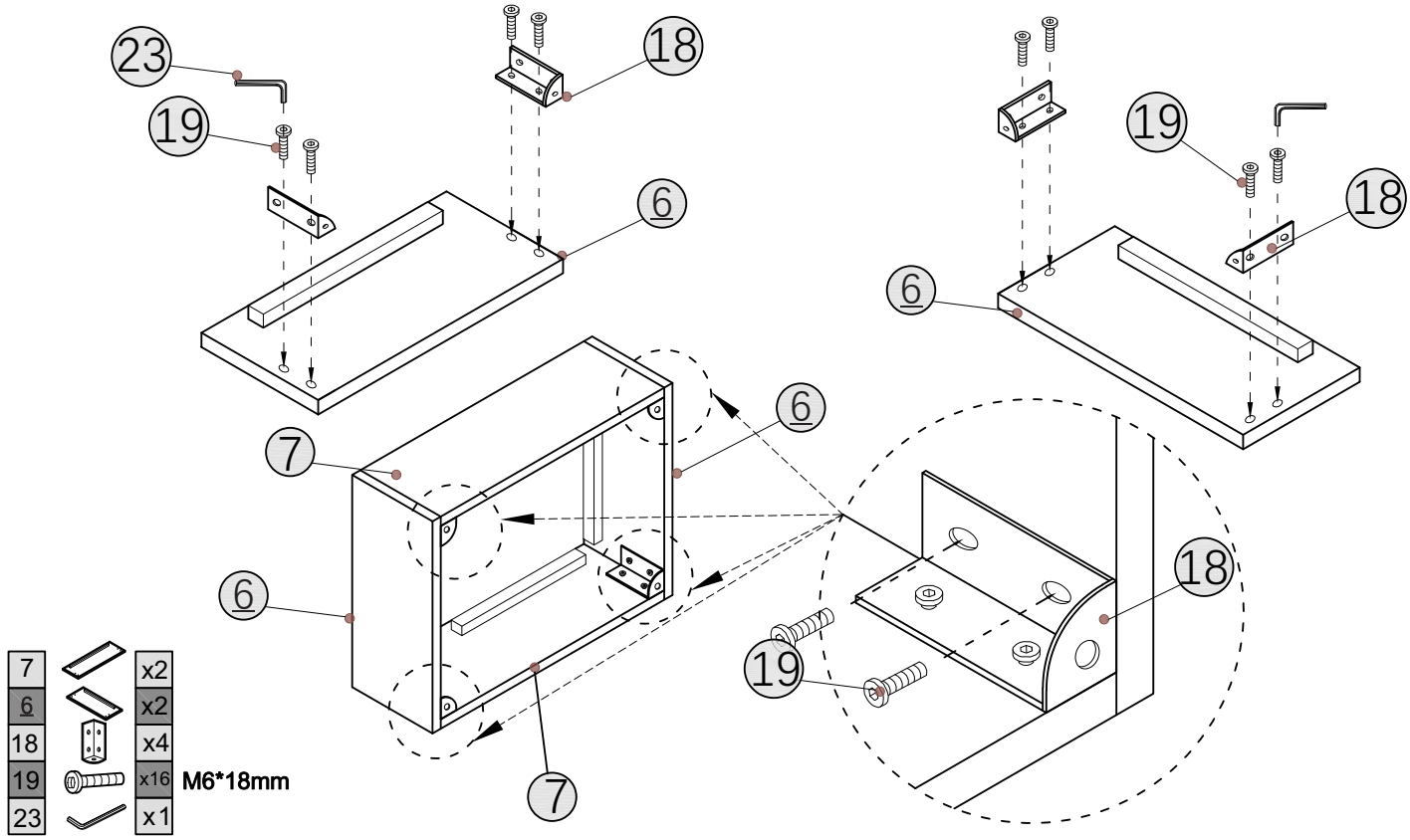

Installation Step

Step2

Insert the bolts on the Legs ⑨ into the anti-slip gaskets ⑧ and the basepanel ④ , and tighten them onto the ottoman.**Then press the plastic nuts ㉔ by hand onto the screw of the sofa legs.**

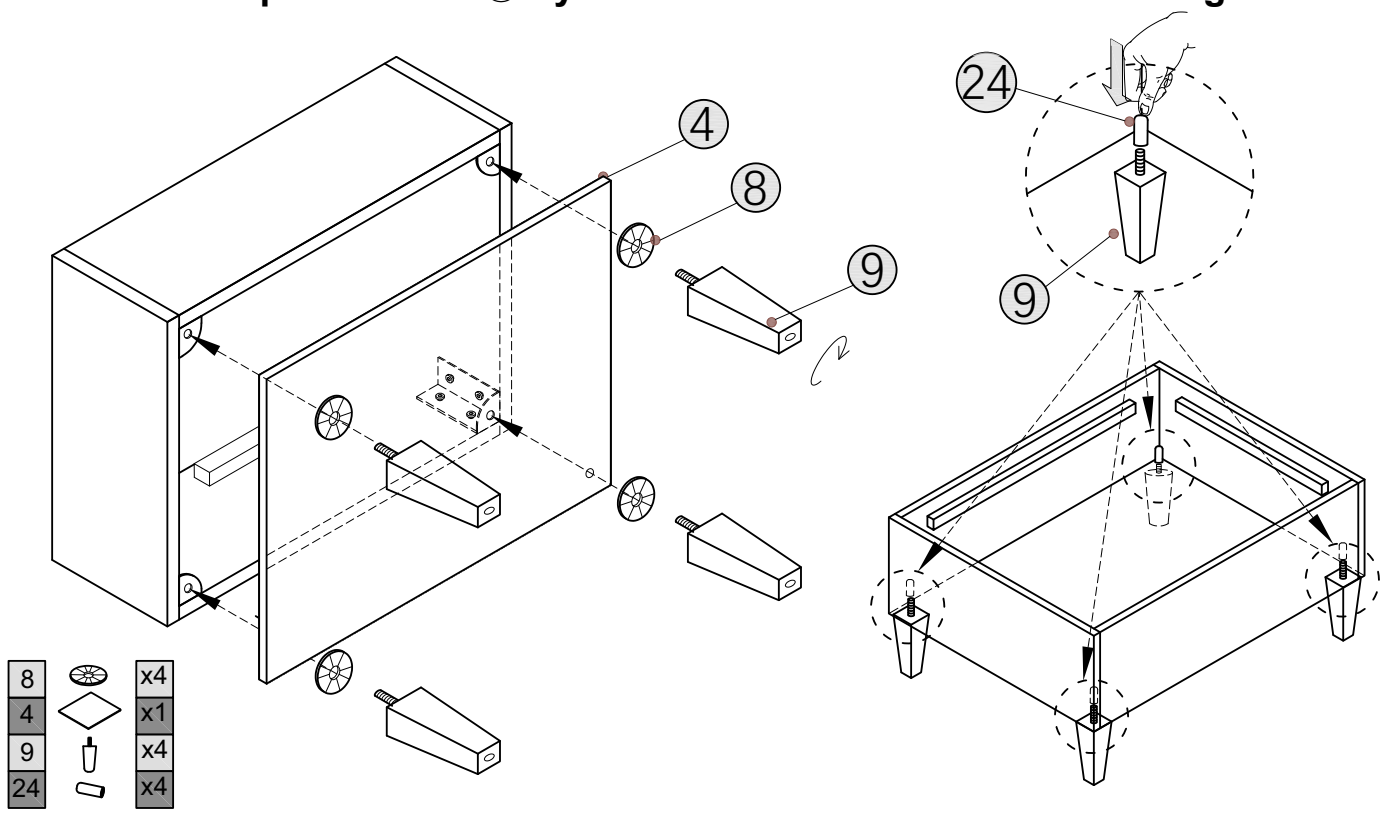

Installation Step

Step3 Put on the cover panel ⑤ and the seat cushion ③ on the ottoman.

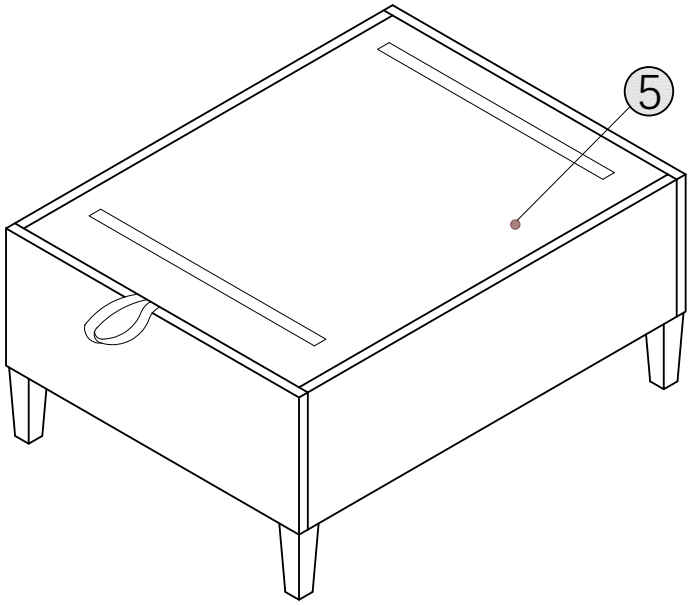

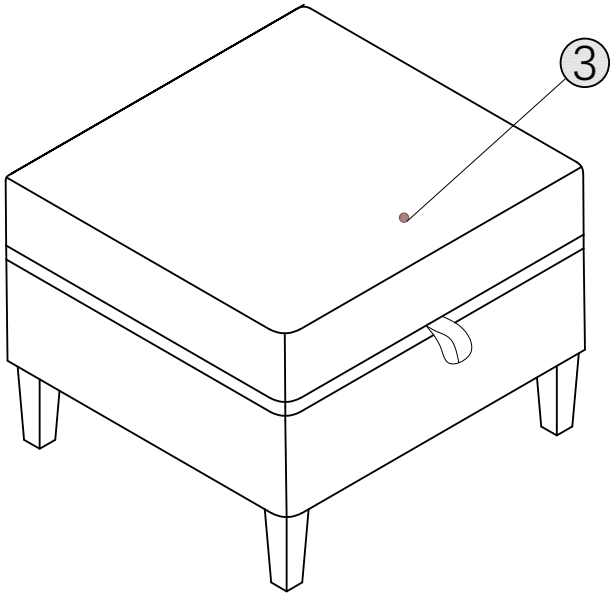

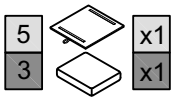

Installation Step

Step4 Put the anti-slip gaskets ⑧ into the legs ⑨ and tighten them on the left/right armrest ⑬/⑭

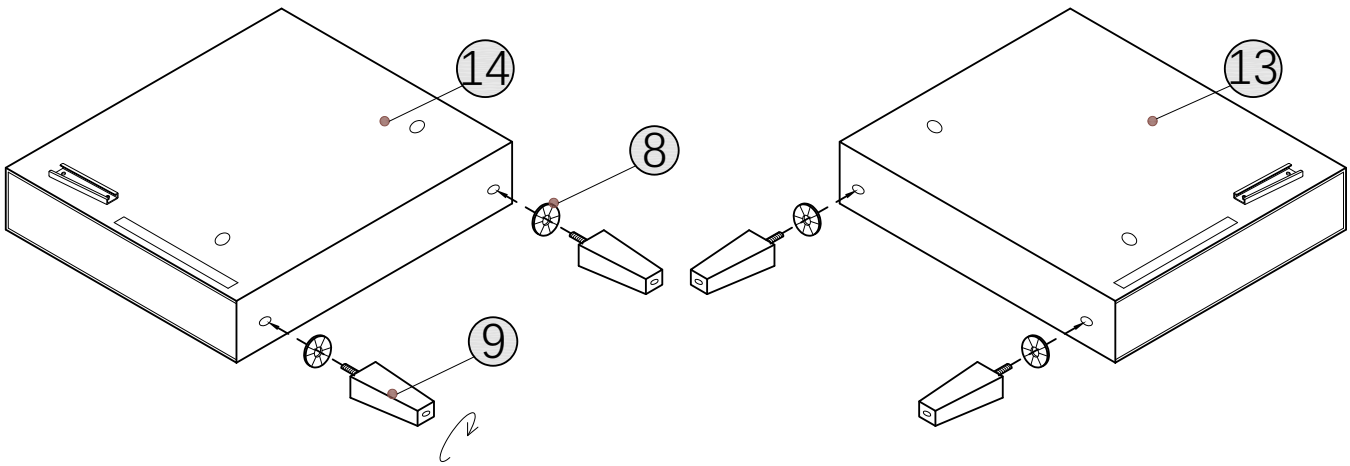

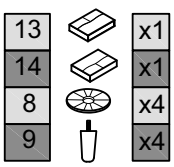

You need to remove the plastics nuts first, then fix the sofa legs to the bottom of the sofa arm without putting the plastics nuts back on.

Installation Step

Step5 Screw the left/right seat frame ⑩/⑪ onto the left/right armrest ⑬/⑭using the bolts ⑲ ,the flat washers ㉒ and allen wrench ㉓

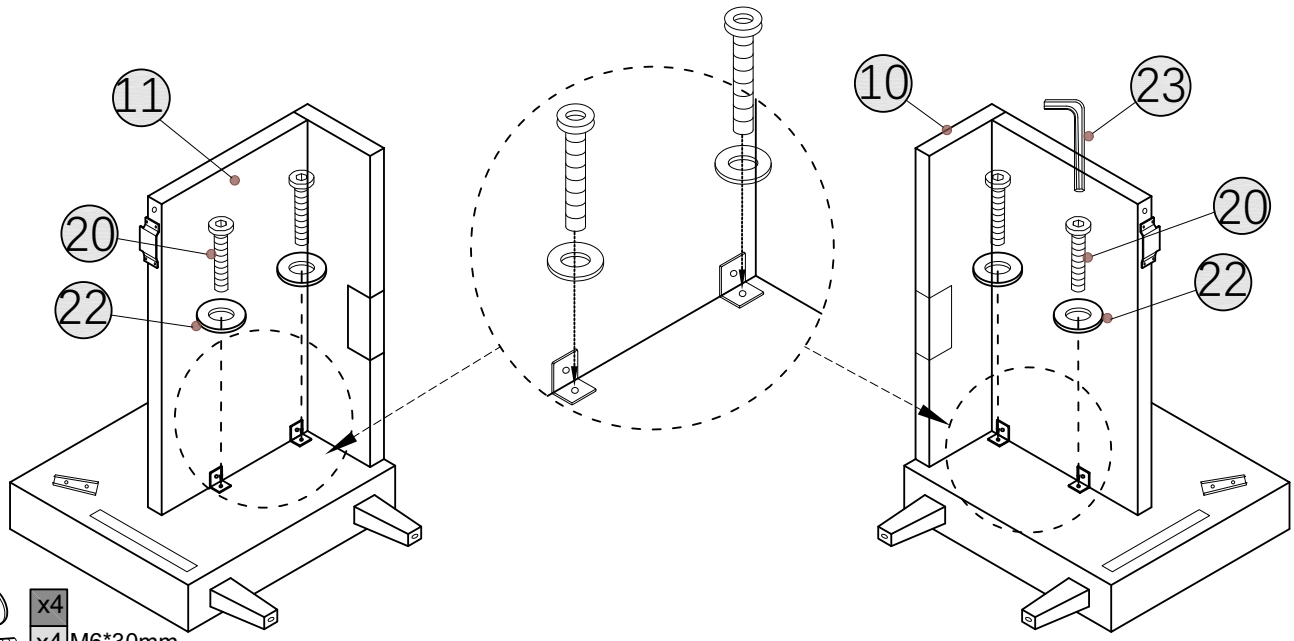

22	x4	
20	x4	M6*30mm
10	x1	
11	x1	

Installation Step

Step6 Fasten the left and right seat frames ⑩/⑪ with connectors ⑯/⑰ using bolts ⑲/⑳, flat pads ㉒, and Allen wrench ㉓.

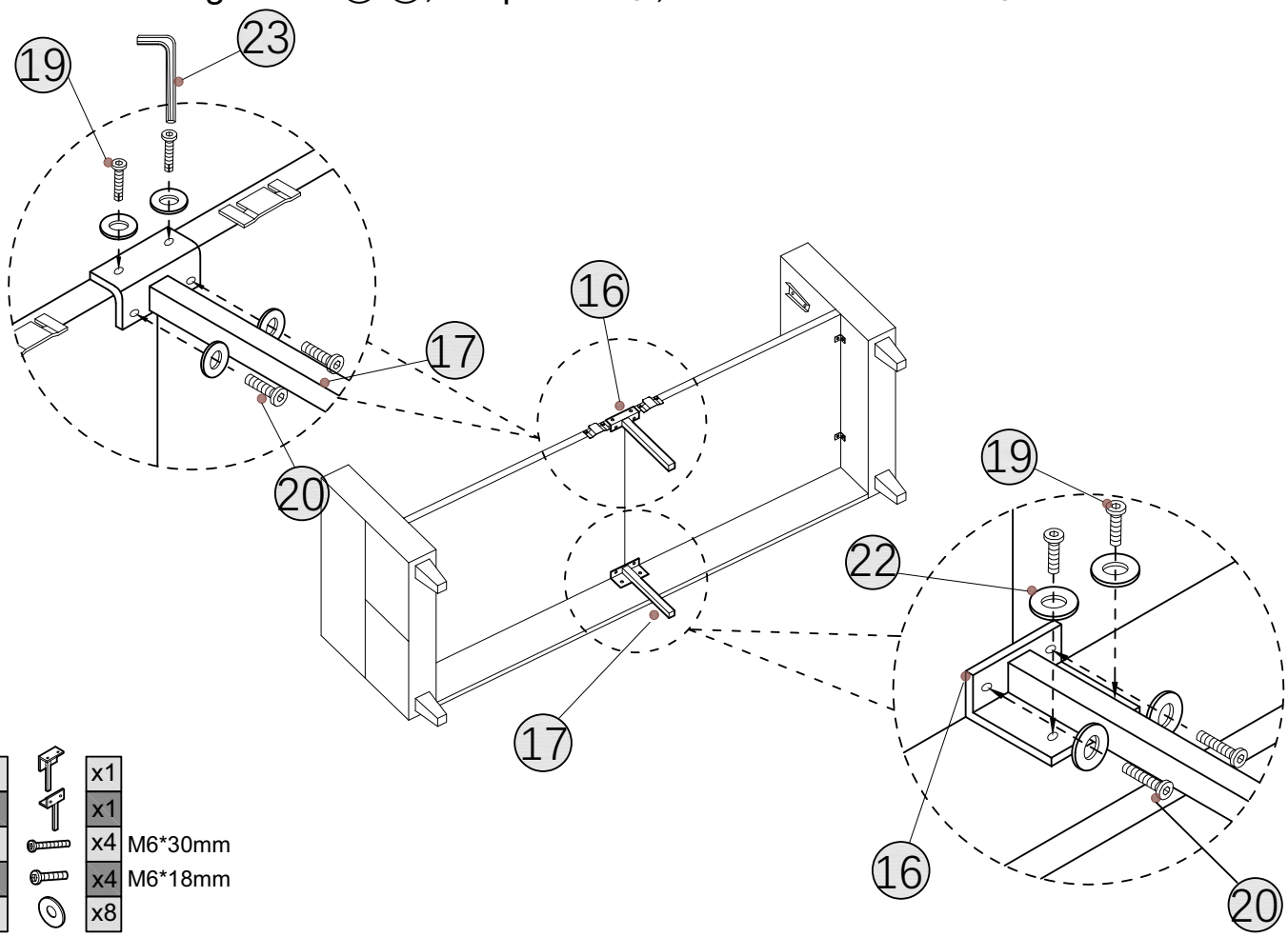

16	x1	
17	x1	
20	x4	M6*30mm
19	x4	M6*18mm
22	x8	

Step7 Use a metal tube ⑮ to connect the two back frames ⑫/⑮together.

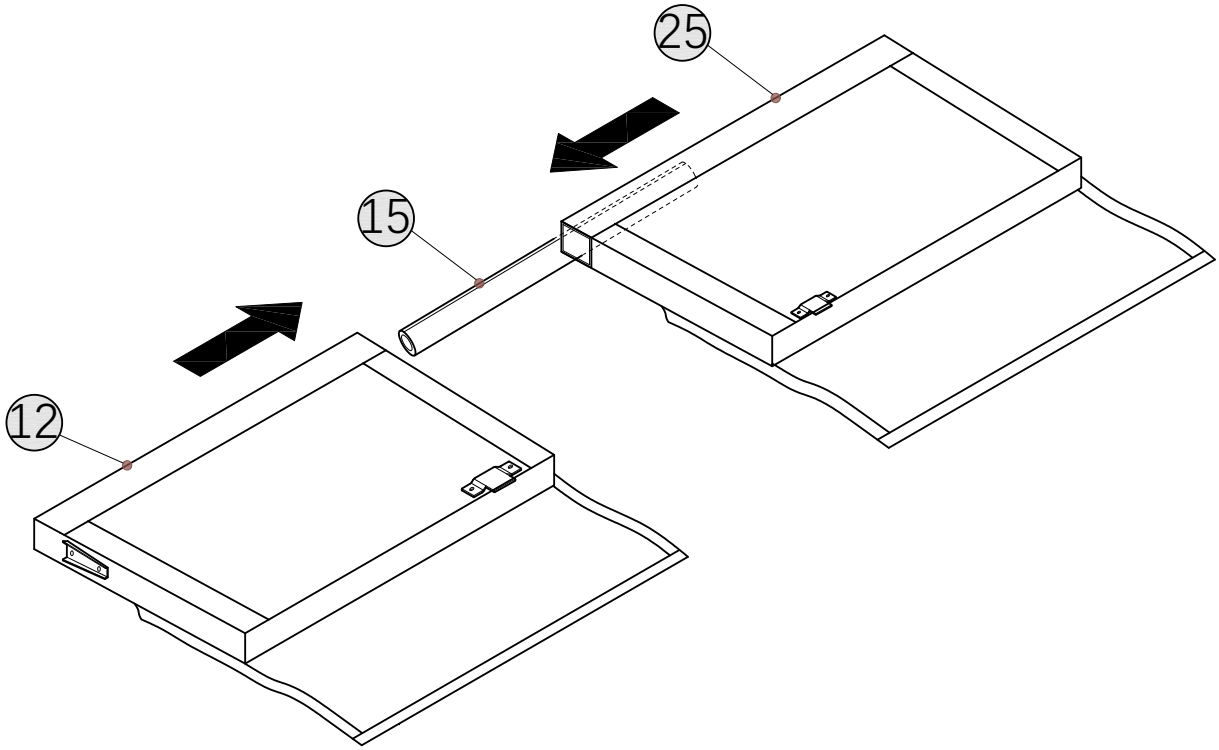

12	x1
25	x1
15	x1

Installation Step

Step8

After connecting the two back frames ⑫/⑮ together with a metal tube ⑮,use the connector ㉑ and the bolt ⑲ to secure the two back frames ⑫/⑮ together.

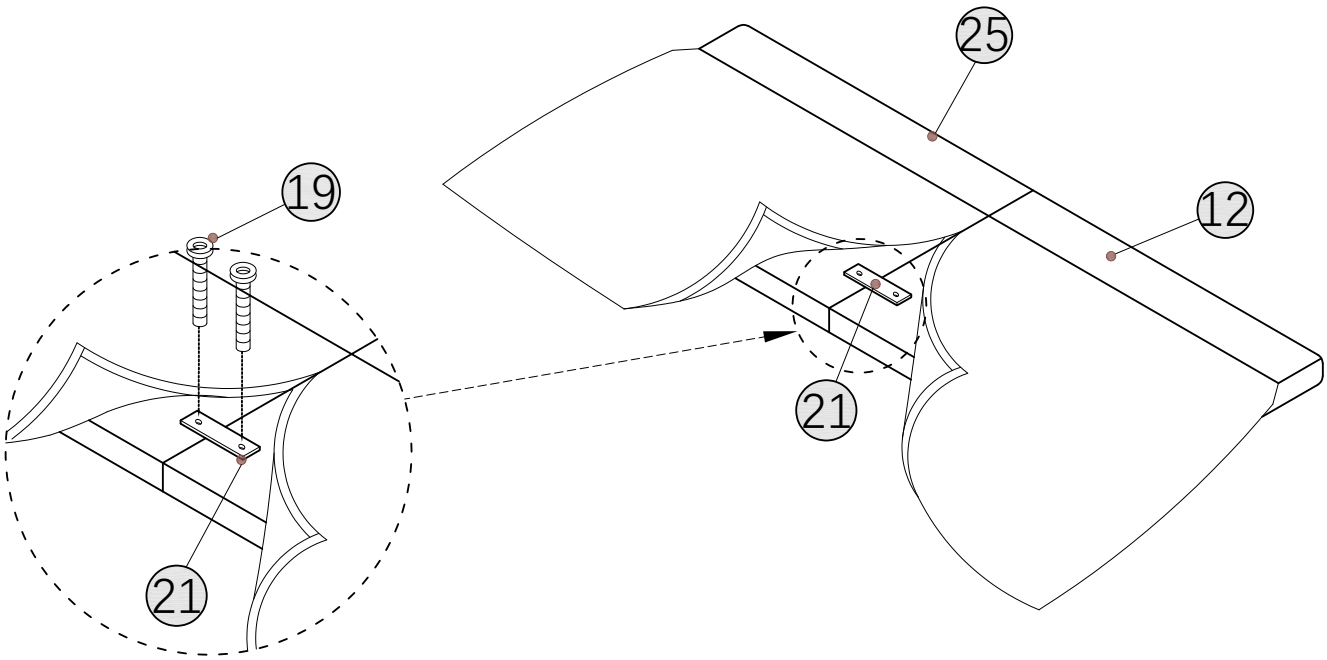

21	x1	
19	x2	M6*18mm

Installation Step

Step9 Insert the assembled backrest ⑫/⑮ into the armrest ⑬/⑭

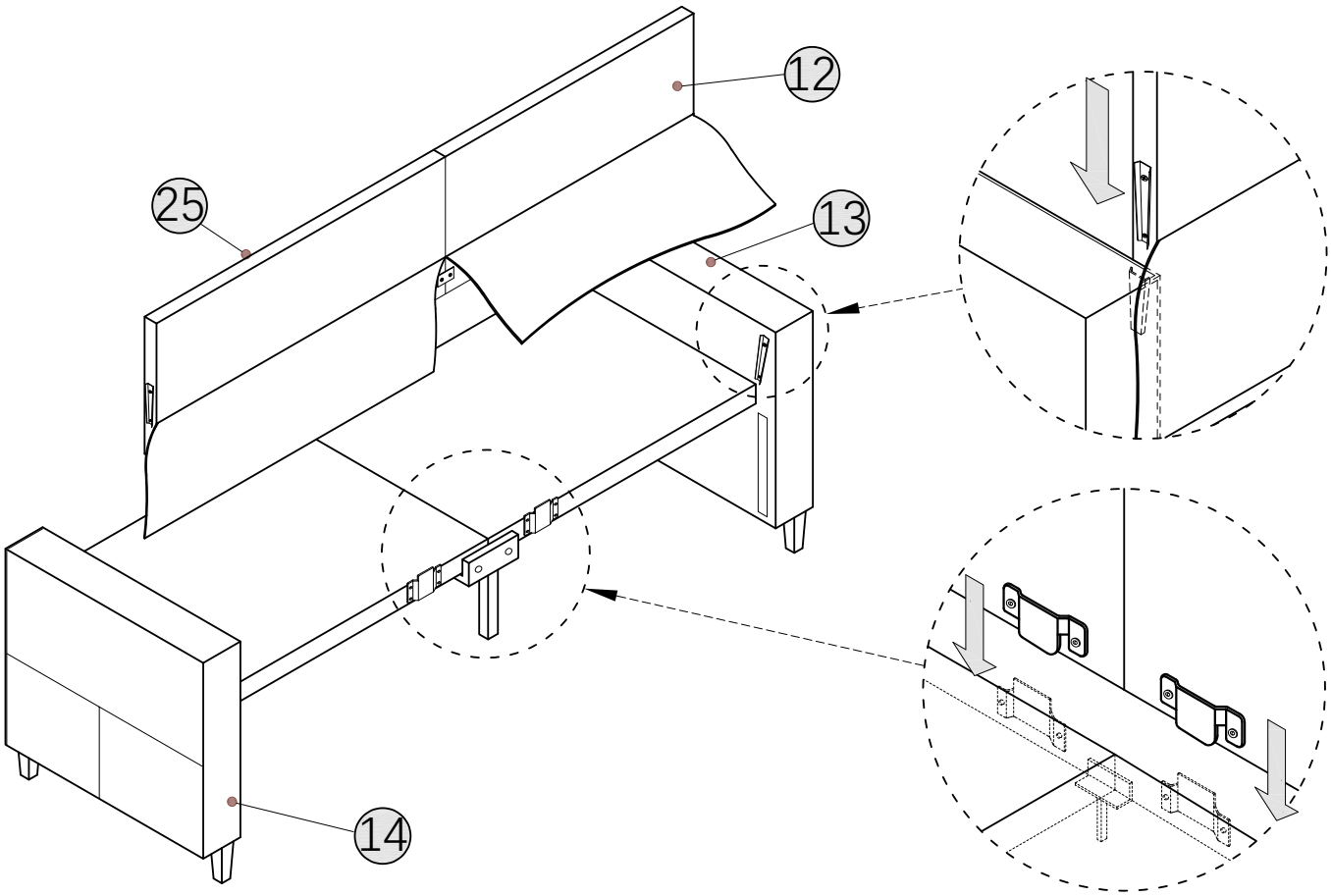

Installation Step

Step10 Paste the magic sticker on the edge of the cloth cover ⑫/⑮ with the magic sticker on the armrest ⑬/⑭.

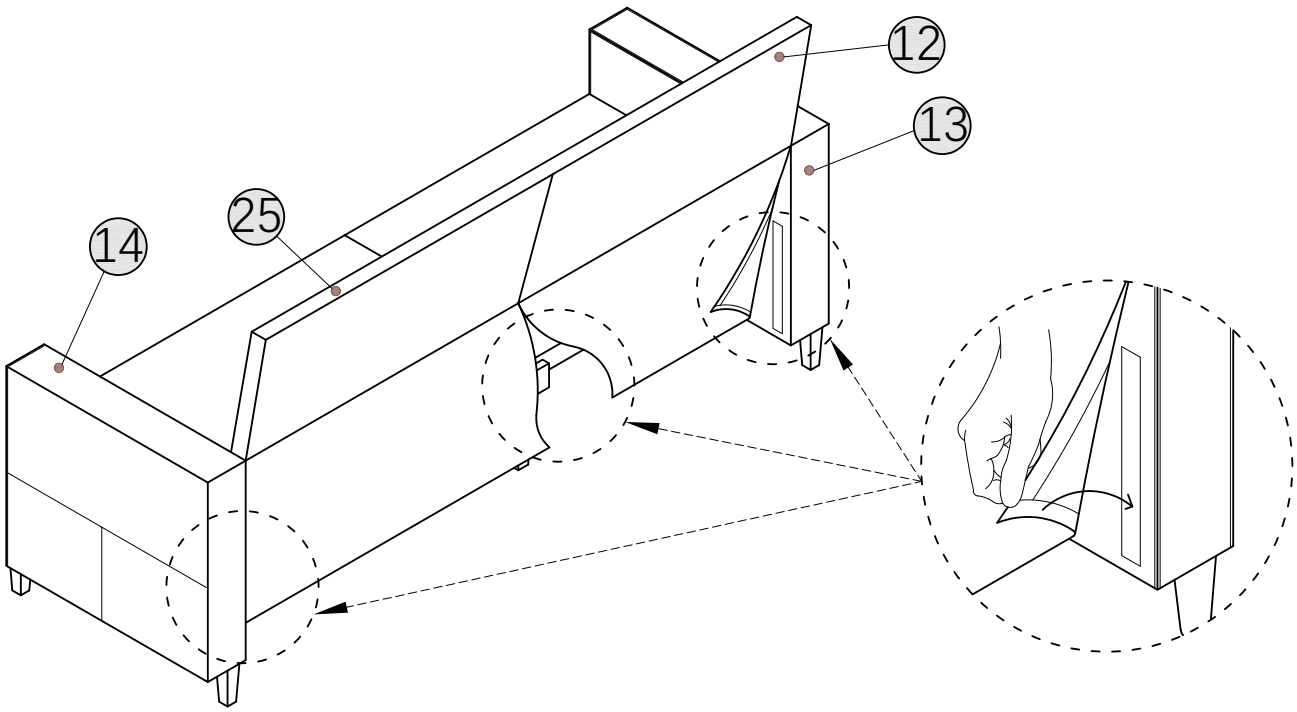

Installation Step

Step11 Place the cushion ① and the bag ② on the assembled sofa frame.

Note: place the seat cushions ① with the welt in front of the left/right seat frame ⑩/⑪.

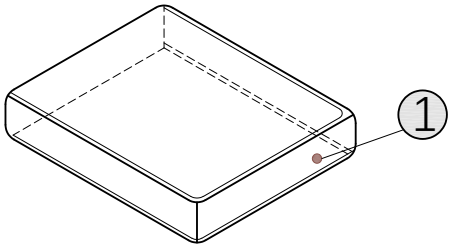

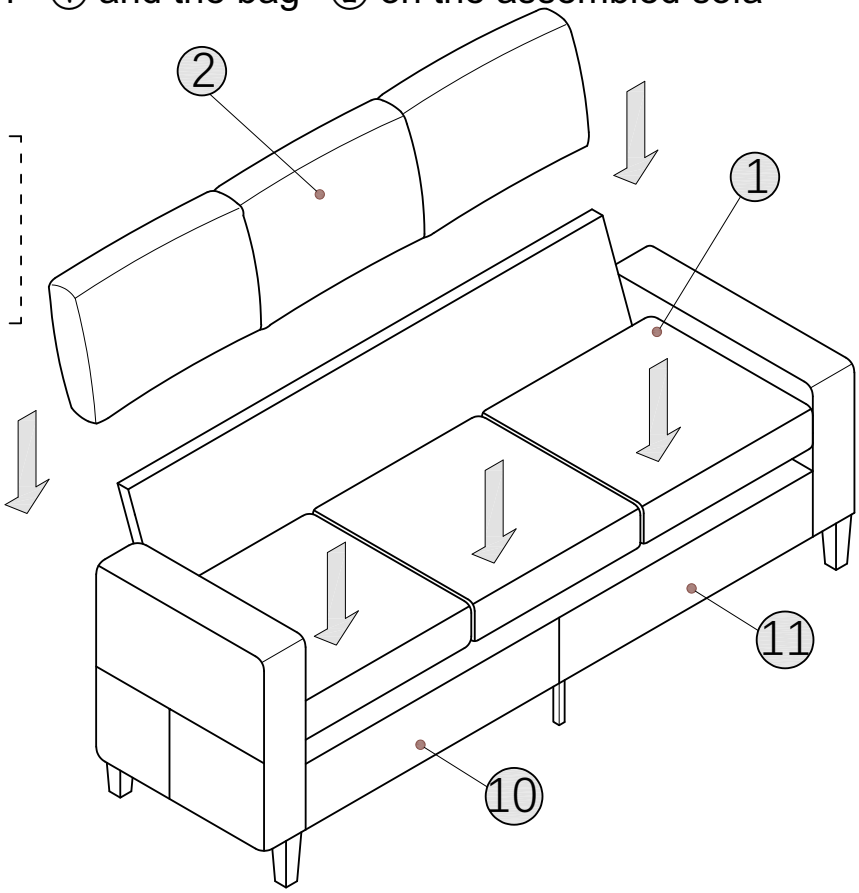

1		x3
2		x3

Installation Step
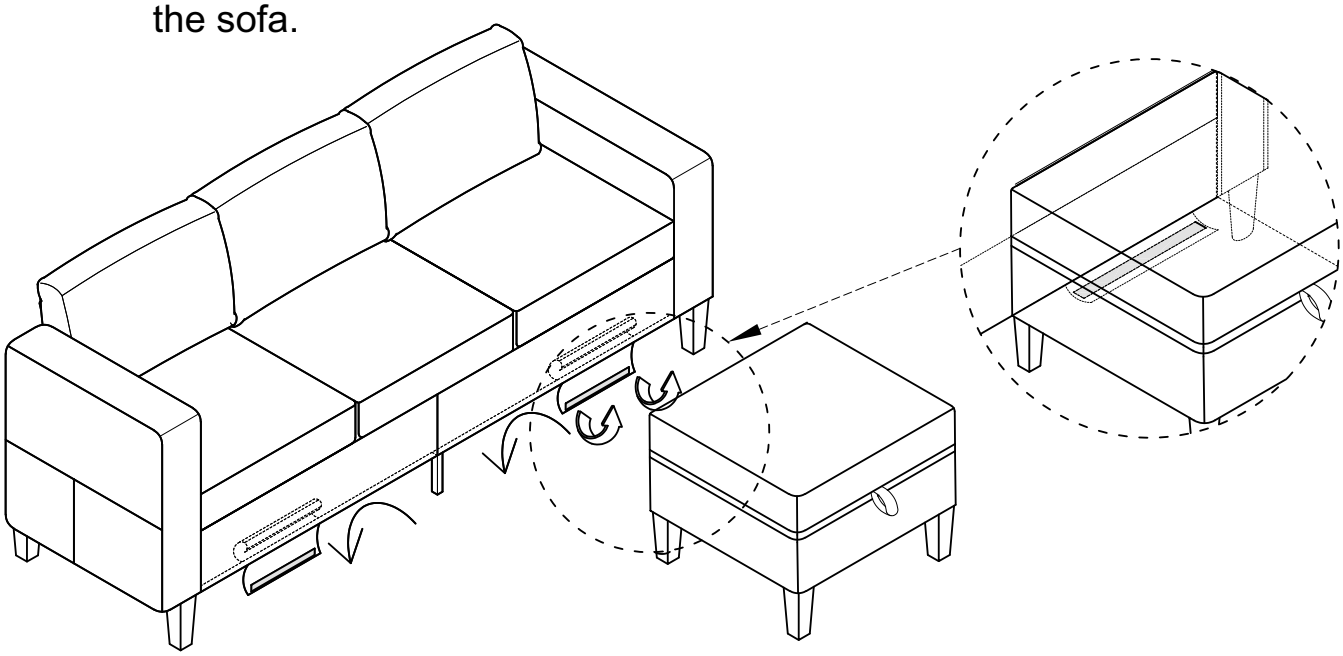
Step12 The ottoman can conveniently be placed in front of the sofa. when placing in the both sides, if using, connect the hooks on the sofa to the loop on the ottoman; if not using, fold the hooks to hide in the sofa.