ASSEMBLY INSTRUCTIONS

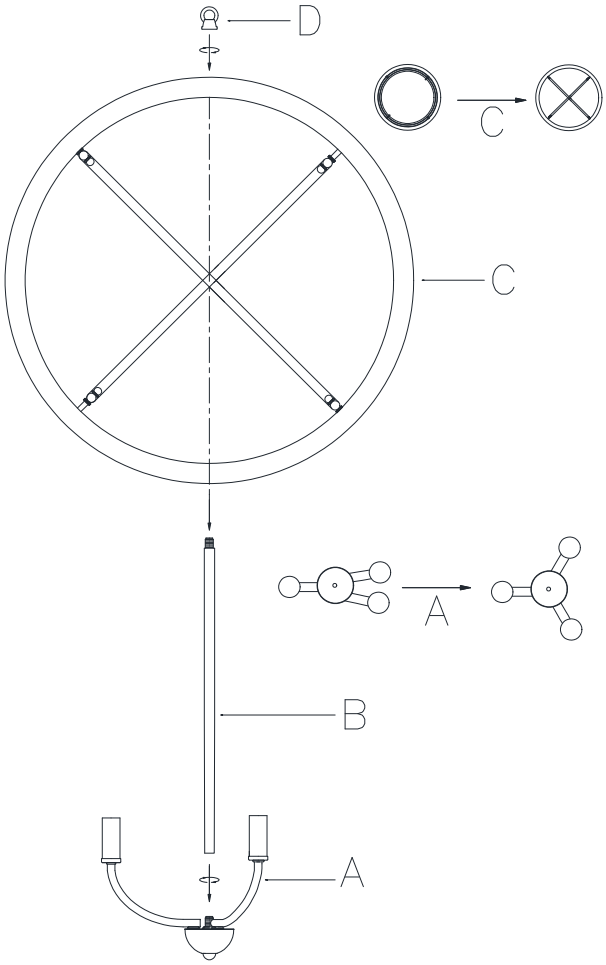

B → A → C → D

Use 60Wx3 Max type B10/T8 BULB
(Bulb not included)

1. Carefully unpack and identify all parts referring to illustration for parts identification.
2. Turn the power to the installation point OFF.
3. Unravel the supply power and ground wires and pass them through the center holes of long stem (B), metal ring (C) and fixture loop (D).
4. Unfold the fixture arms in place.
5. Thread the long stem (B) onto the nipple of the socket assembly (A).
6. Carefully place the metal ring (C) through protruding nipple of the long stem (B), securing with fixture loop (D). Hand tighten until snug.
7. Unfold the metal ring (C) in place.
8. Referring to the installation instruction with the product for the wiring and installation.
9. Install proper bulbs (not provided) to the sockets referring to the marking and/or labels on the fixture for maximum wattage.
10. Restore the power to the installation point ON.
11. Assembly is completely. Retain this sheet for future reference.

MOUNTING AND WIRING INSTRUCTIONS
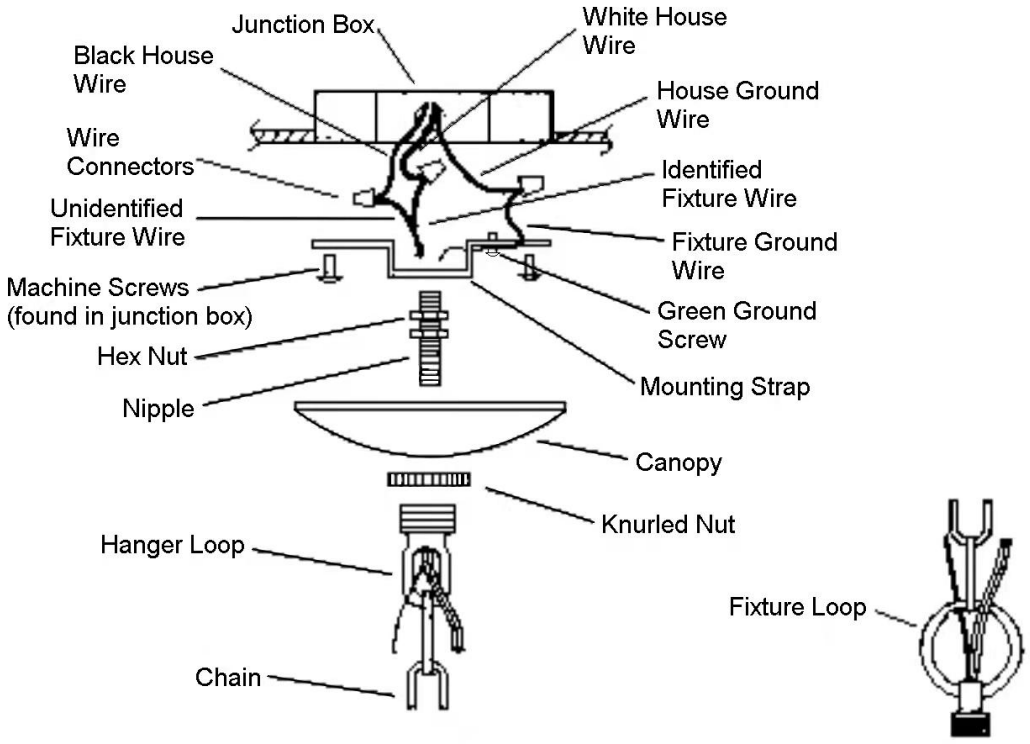
1. Fasten mounting strap to junction box with machine screws found in junction box. The mounting strap must be used to provided proper grounding of fixture.
2. Turn nipple into threaded hole in the mounting strap. Turn hex nut onto nipple. Remove knurled nut from hanger loop. Turn hanger loop onto nipple.Place canopy up against ceiling and adjust nipple to leave about 3/8" protruding through canopy. Remove canopy and tightly lock nipple in place by turning hex nut up against mounting strap.
3. Assemble one end of chain to fixture loop by opening chain link and closing it around loop. NOTE: Never twist chain link to open. Chain link must be opened in a "C" shape.
4. Weave the two conductor cord and bare ground wire through the chain about every third link. Slide knurled nut down chain. Slide canopy down chain.
5. Adjust chain length and wire lead length at this time for desired hanging height of fixture. Leave at least 12" of leads beyond end of chain.
6. Open last chain link then lift chain and fixture up to ceiling and hook open link through hanger loop. Close chain link.
7. Insert wire leads through hole in hanger loop and nipple into junction box. Pull leads down out of junction box for easier wiring. Connect the IDENTIFIED lead (white, tinned or ribbed - if both conductors are the same color, feel for the ribbed edge that runs the entire length of ine side) to the WHITE house wire. Connect the UNIDENTIFIED lead to the BLACK house wire. Turn the green ground screw into the hole in the mounting strap and wrap the bare ground wire around screw one full turn and tighten screw. Connect remaining end of bare wire to the house ground wire (bare). If the junction box itself is metal and is already grounded, attachment to the green screw only is sufficient. Always use wire connectors that are UL approved for the size and number of wires to be connected.
Caution: Never connect the bare ground wire to the black or white house wires.
8. Place all wires and connectors back into the junction box making sure there are no loose wire connectors or bare leads. Slide canopy up to ceiling and hold in place by turning knurled nut onto hanger loop.
9. (For fixtures with glass shade only) Your glass shade is held in place either by thumbscrews or by a spin-on ring screwed onto a threaded socket. Place glass shade(s) into holder and tighten thumbscrews or spin ring onto socket.
10. Lamp fixture with proper size bulbs in accordance with the wattage label found on the fixture.