ZEAFiVE®

PRODUCT INSTRUCTION VIDEO

SIZE DETAILS

ACRYLIC SHOWER BASE

MODEL No.ZSB3636NA

All dimensions are nominal, minor variations may occur.

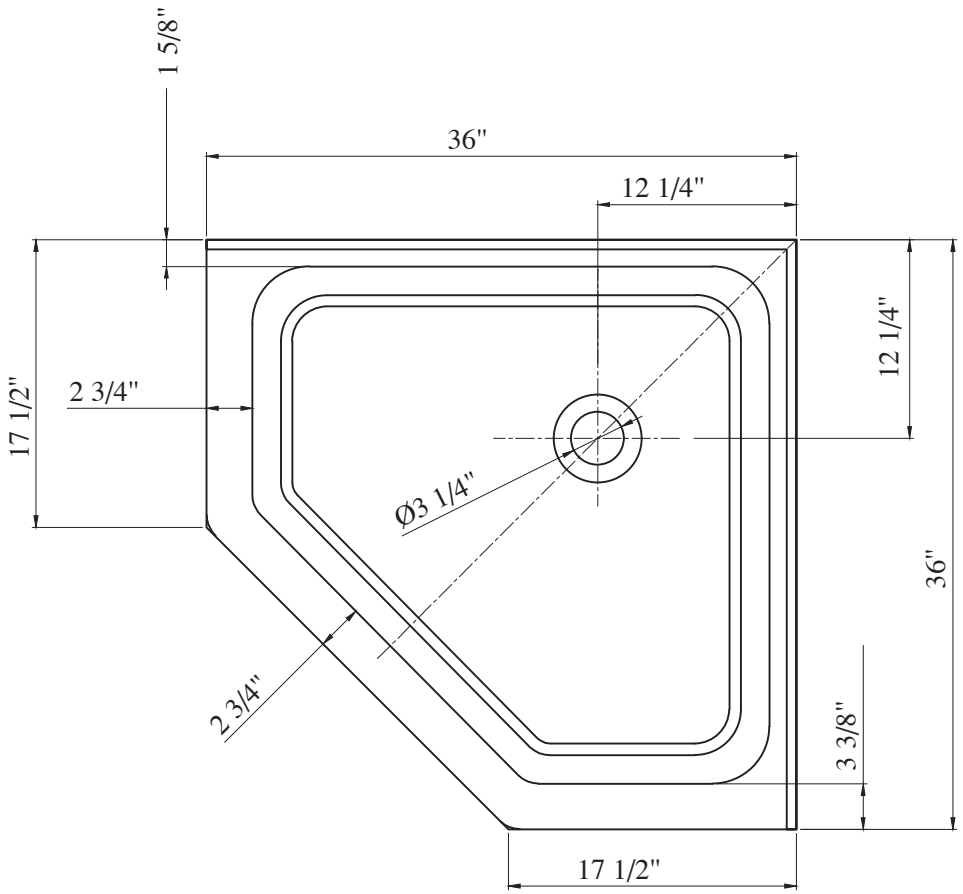

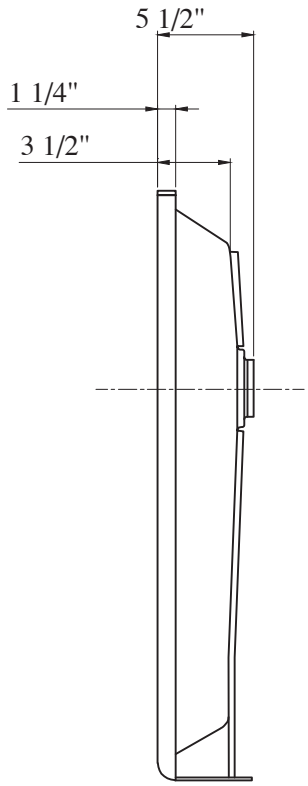

Email: service@bestgosupplychaininc.com