ASSEMBLY INSTRUCTION

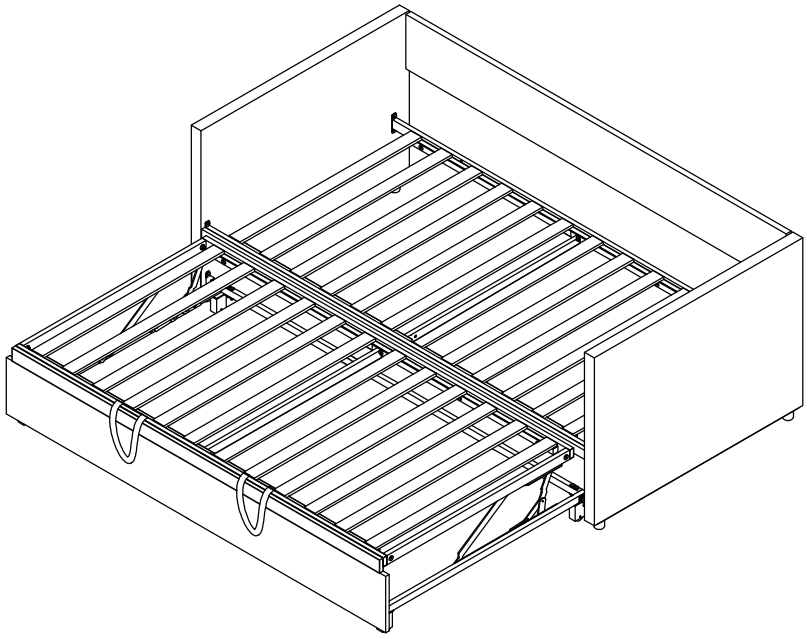

TIPS

1. Please read the instructions fully before assembly. These instructions include important information which could ensure correct assembly. We have been working on providing high quality products for you. However, in the rare instance that your product is defective, missing parts or there are some issues, please don't hesitate to contact our customer service to submit parts requirements, assembly suggestion, or warranty claims, and we will give the best solution as soon as possible. If necessary, we need you to provide some more clear pictures of the issue.
2. Insert the screws in holes and tighten the screws, but not too tight, 70%~80% is ok, finally tighten all the screws. If some issues happened that some screws can not target to the hole or some parts are difficult to install, please adjust the tightness of the screws.
3. 2 people are recommended to finish.

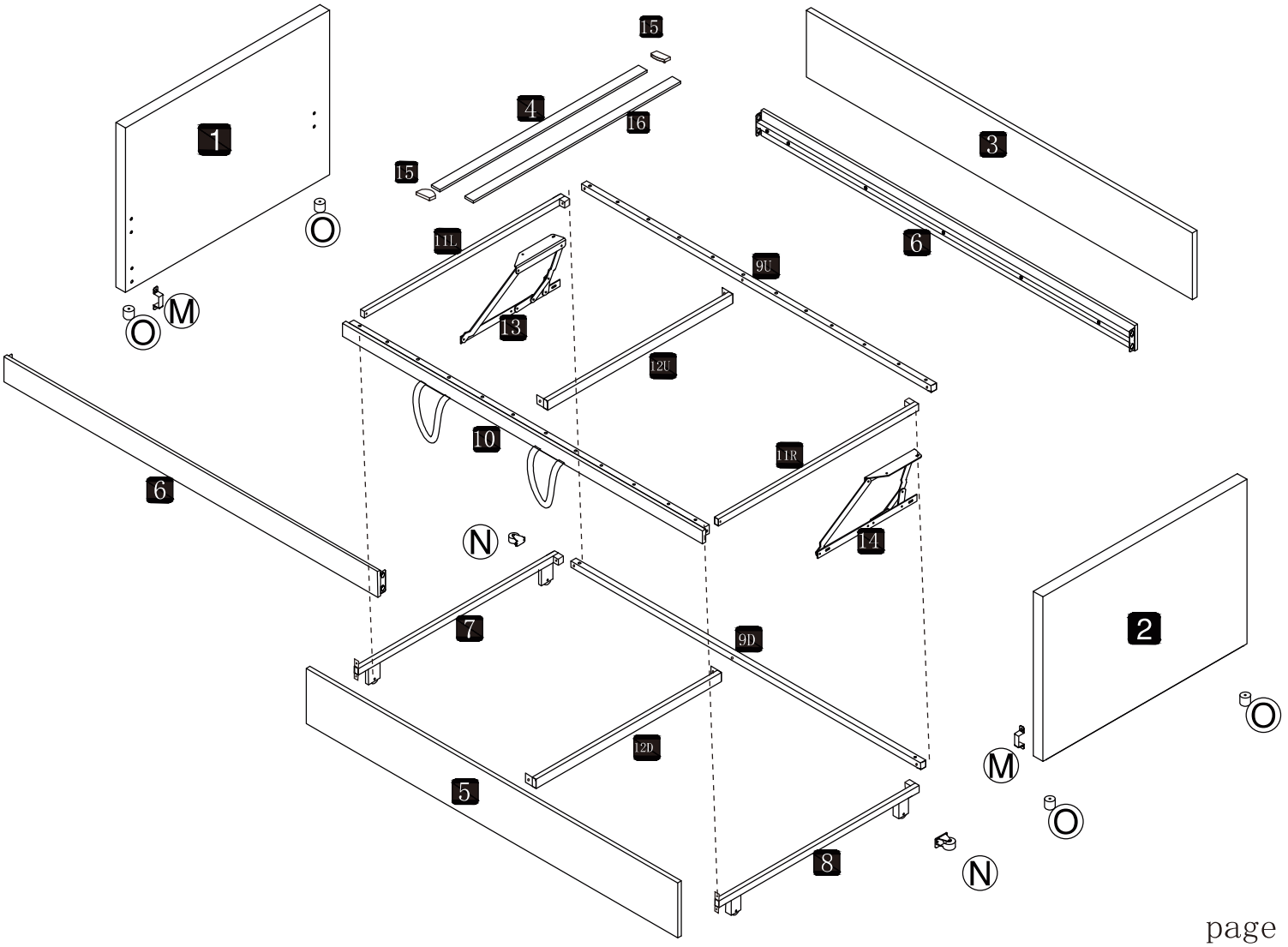

Part List

1 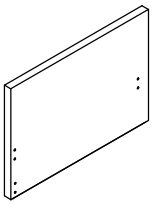 Armrest - L X 1	2 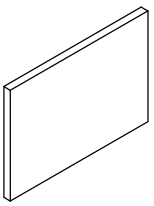 Armrest - R X 1	3 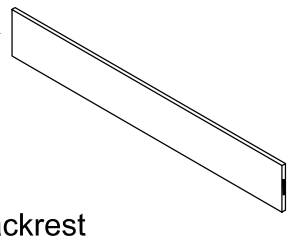 Backrest X 1	4 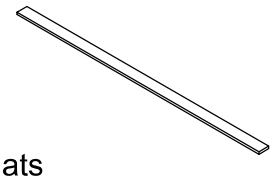 Slats x12
5 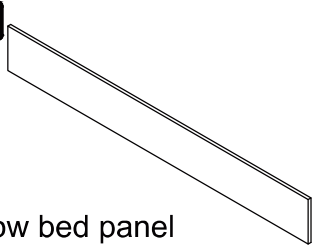 Tow bed panel X 1	6 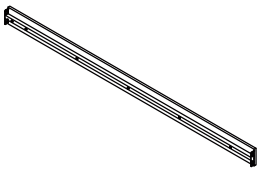 Front bed beam x2	7 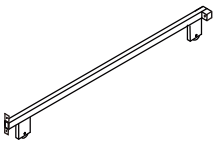 Tow bed side pipe - L X 1	8 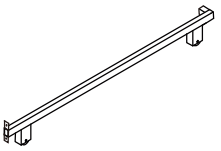 Tow bed side pipe - R X 1
9 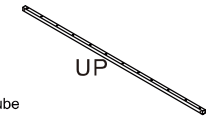 Tow bed front tube x1 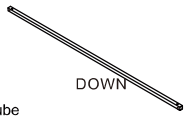 Tow bed front tube x1	10 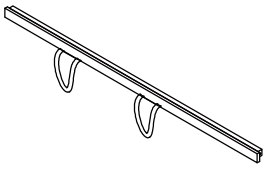 Tow bed front bed beam X 1	11 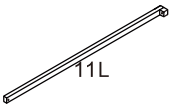 Tow bed upper side pipe x1 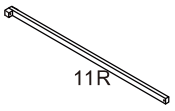 Tow bed upper side pipe x1	12 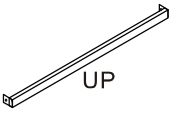 Tow bed upper side pipe x1 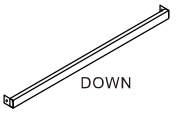 Tow bed upper side pipe x1
13 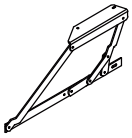 Lift Mechanism - L X 1	14 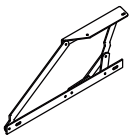 Lift Mechanism - R X 1	15  End Plastic Cap X48	16 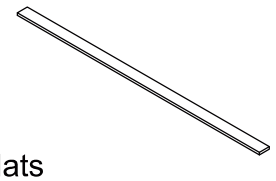 Slats x12

Hardware List

A  5/16 45mm X7	B  5/16 25mm X26	C 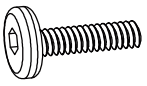 5/16 15mm X4	D  1/4 25mm X4
E  3/16 15mm X4	F  5/16 X5	G  5/16*19mm X43	H  1/4*16mm X 7
I  5/16*12mm X38	J  5/16 X1	K  1/4 X1	L  Spanner X 1
M 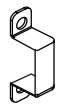 Positioning iron sheet X 2	N 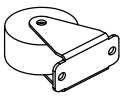 Side wheel X 2	O 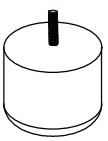 Legs X 4	P 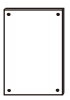 X 2
			Q  1/4 50mm X3

Step 1

Using an Allen key (J) and bolt (B), secure the Positioning iron sheet (M) to the armrest (1&2), paying attention to the direction, with the opening facing inward.

(Mit einem Inbusschlüssel (J) und Schraube (B) befestigen Sie das Positioniereisenblatt (M) an der Armlehne (1&2), achten Sie auf die Richtung, wobei die Öffnung nach innen zeigt.)

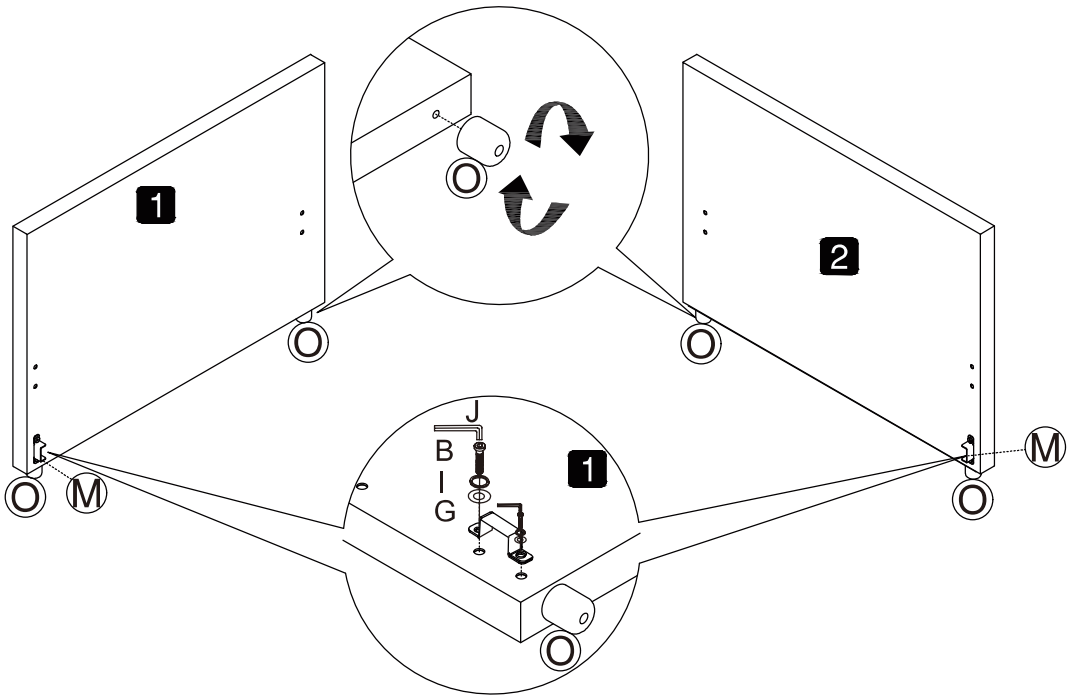

I ×4

G ×4

B ×4

J ×1

Step 2

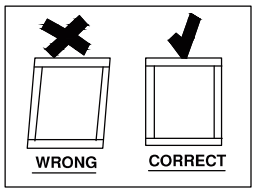

Use the hexagonal wrench (J) and bolt (B) to connect the bed beam (6) to the handrail (1&2). Pay attention to the direction, as shown in the figure. The convex Flat noodles faces inward and the velcro faces upward.

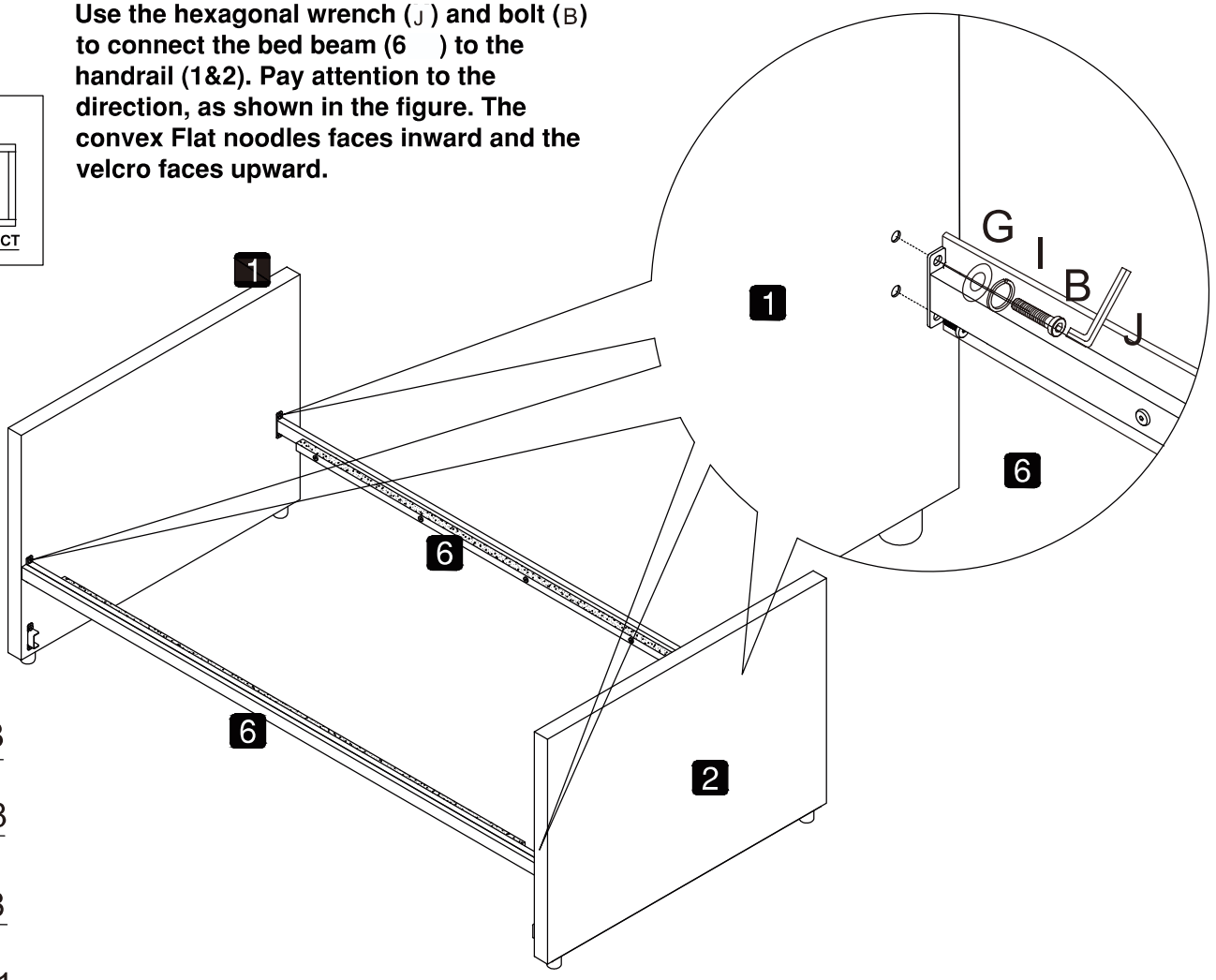

I x8

G x8

B x8

J ×1

Step 3

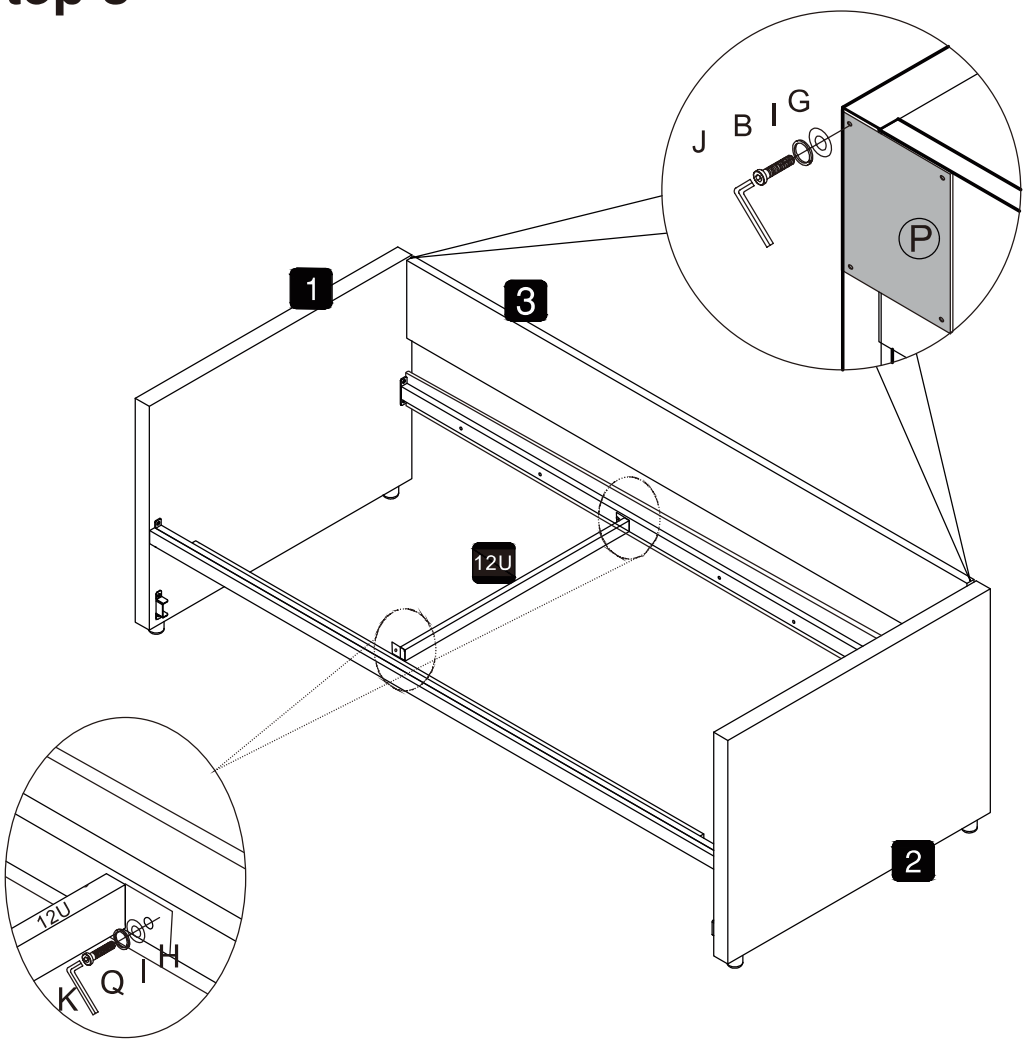

As shown in the figure, hook the backrest (P) onto the armrest (1)&(3).

(Wie in der Abbildung gezeigt, haken Sie die Rückenlehne (P) an die Armlehne (1)&(3).)

K ×1

Q x2

B x8

I x8

G x8

H x2

J ×1

Step 4

Using an Allen key K&bolt (K), secure the Side wheel (E) to the traction bed side tubes (12&13).

(Mit einem Inbusschlüssel K-Bolzen (K) befestigen Sie das Seitenrad (E) an den Seitenrohren des Traktionsbetts (7&8).)

E ×4

K ×1

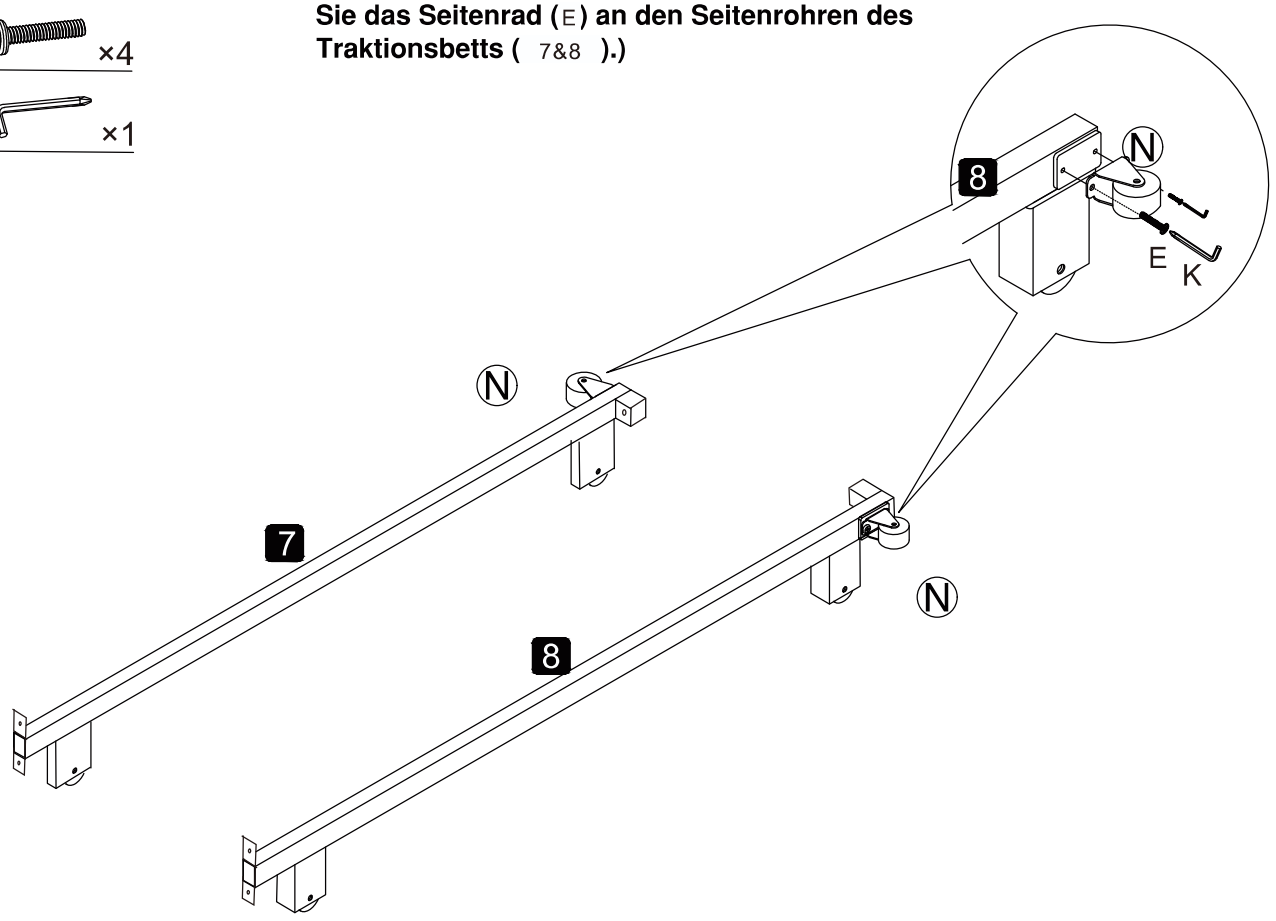

Step 5

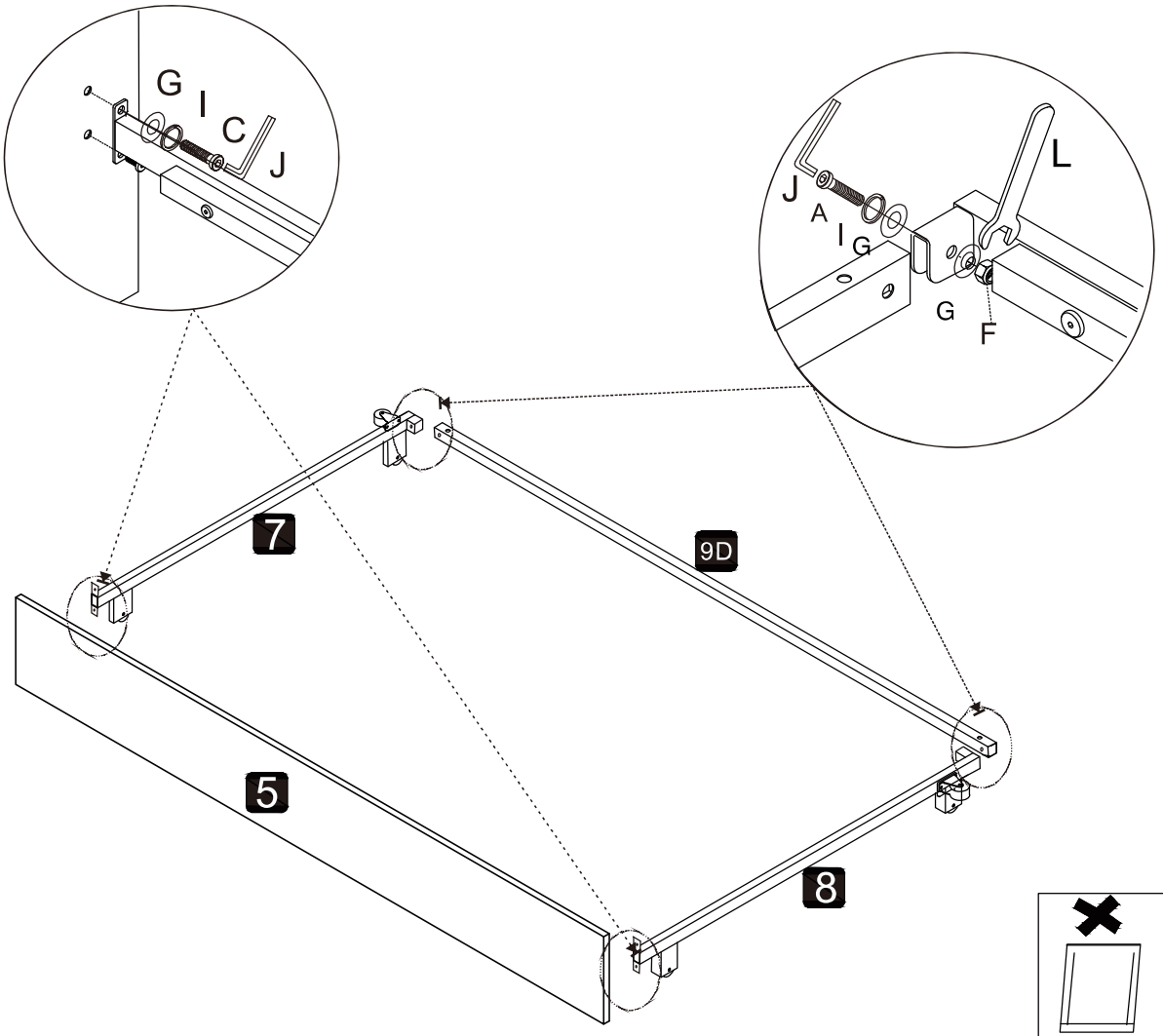

- L ×1
- F x2
- A x2
- I x6
- G x8
- C x4
- J ×1

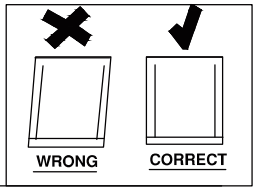

Step 6

Using Allen key (J) &bolt (B), secure the Lift Mechanism (13&14) to the Tow bed side pipe (7 & 8).

(Mit Inbusschlüssel(J)&Bolt(B) befestigen Sie den Hebemechanismus (13&14) am Seitenrohr des Abschleppbetts (7 & 8).)

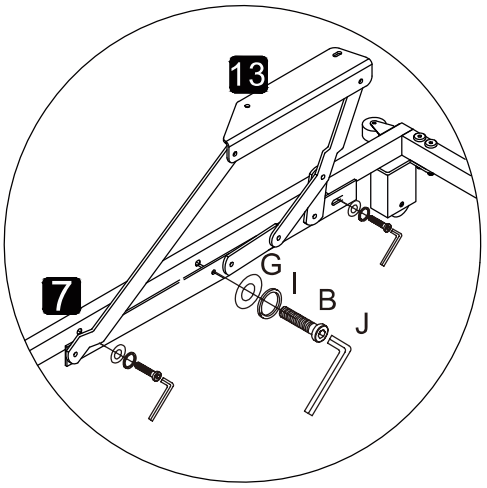

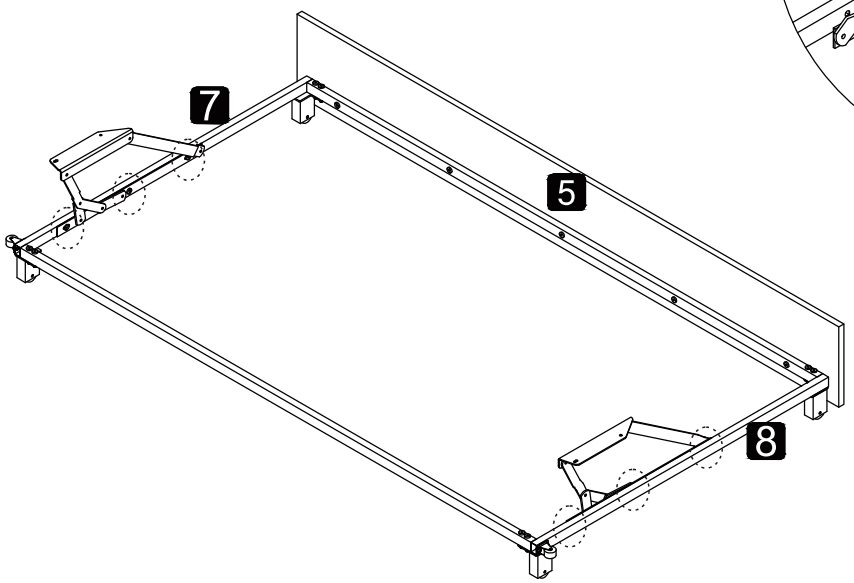

- I x6
- G x6
- B x6
- J ×1

Step 7

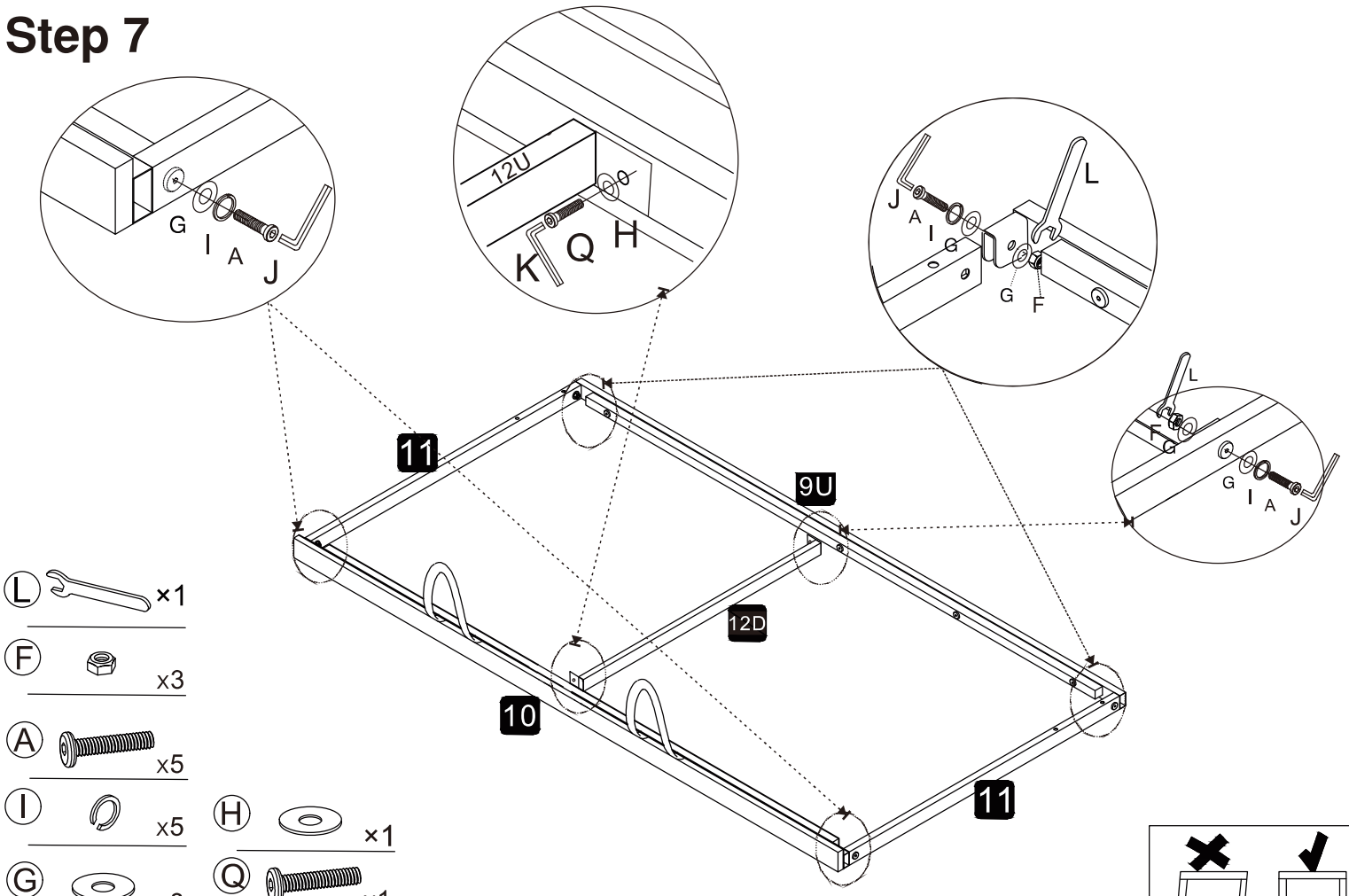

- L ×1
- F x3
- A x5
- I x5
- H ×1
- G x8
- Q x1
- J ×1
- K ×1

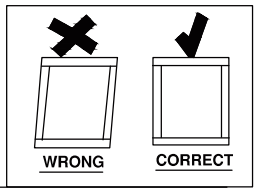

Step 8

Bottom view, connect Lift Mechanism(15&16) to Tow bed upper side pipe(14) using an Allen key (K)&bolt (E).

(Aus der unteren Ansicht verwenden Sie einen Inbusschlüssel (K) und Schrauben (E), um die Hebemechanismen (15 und 16) mit den Seitenrohren (14) auf dem Traktionsbett zu verbinden.)

- H ×4
- D ×4
- K ×1

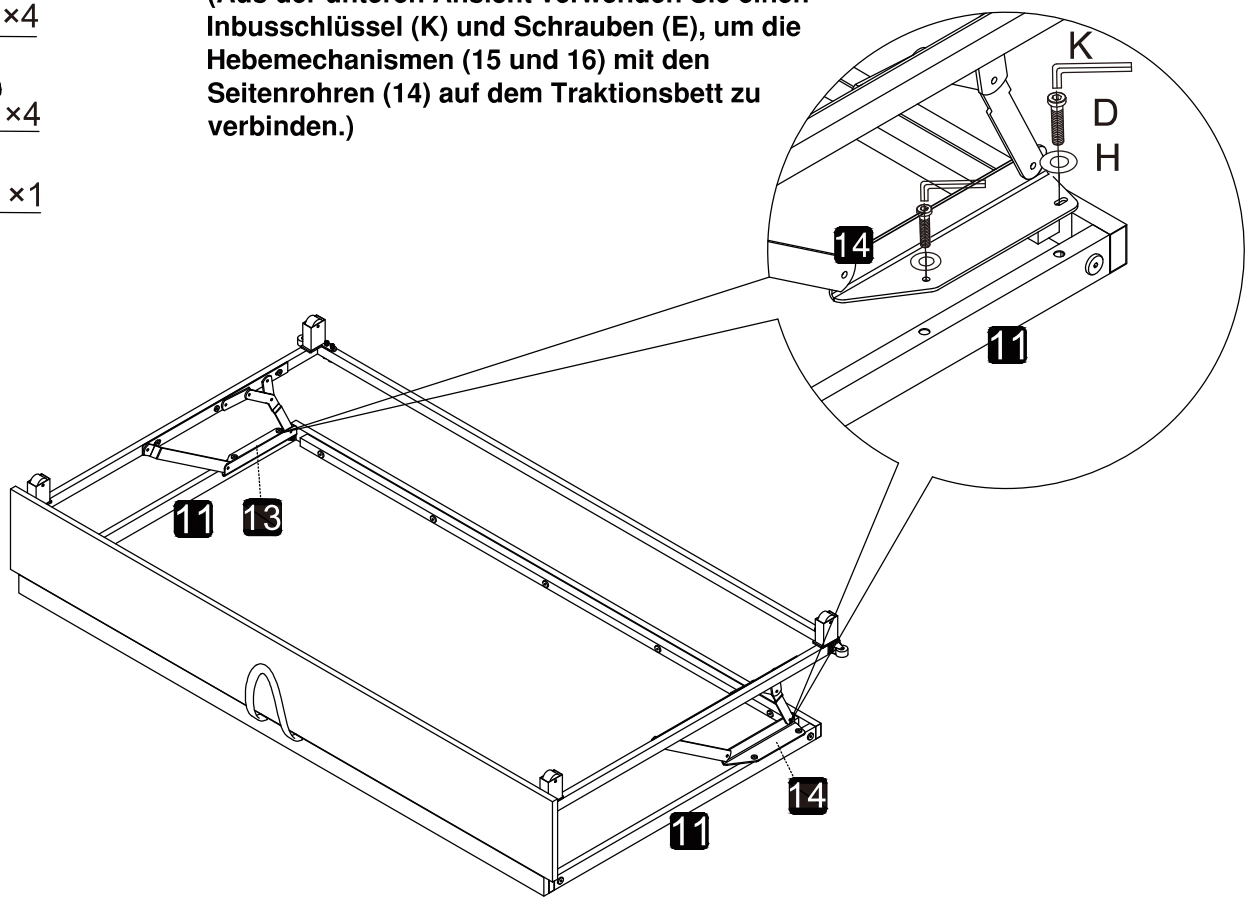

Step 9

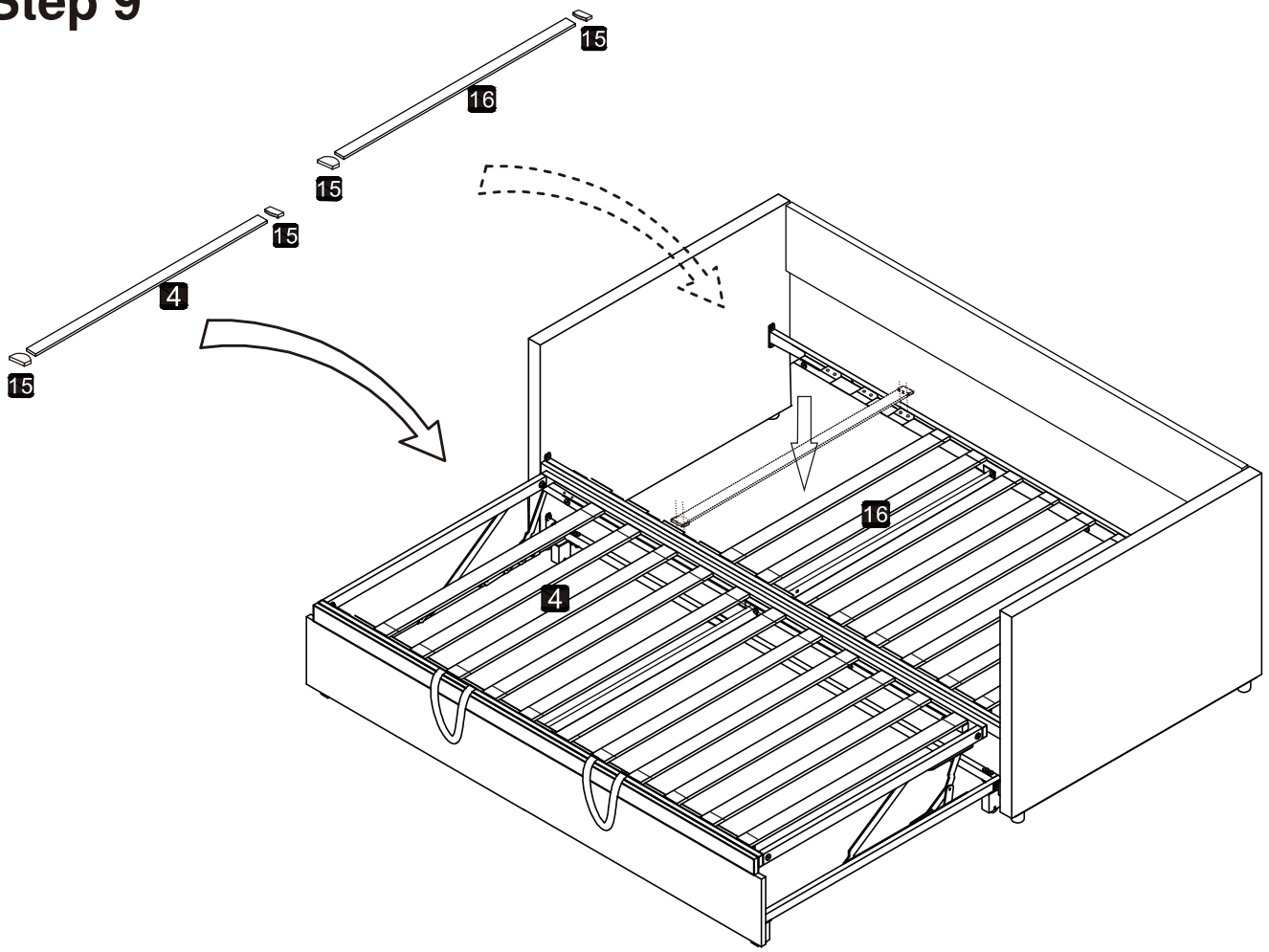

Step 10

