ASSEMBLY INSTRUCTION

Radner Bar Cabinet

Components

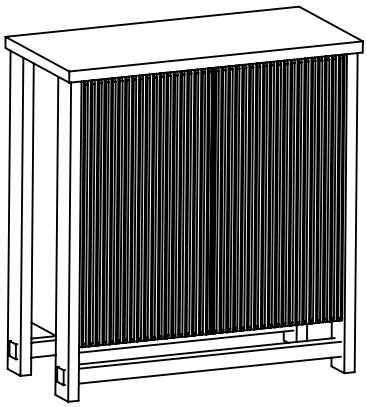

A
X1

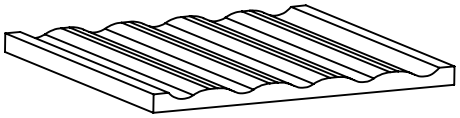

B
X2

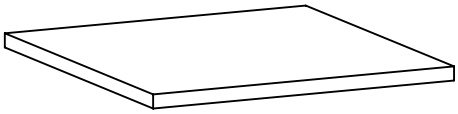

C
X2

ASSEMBLY INSTRUCTION

Step1

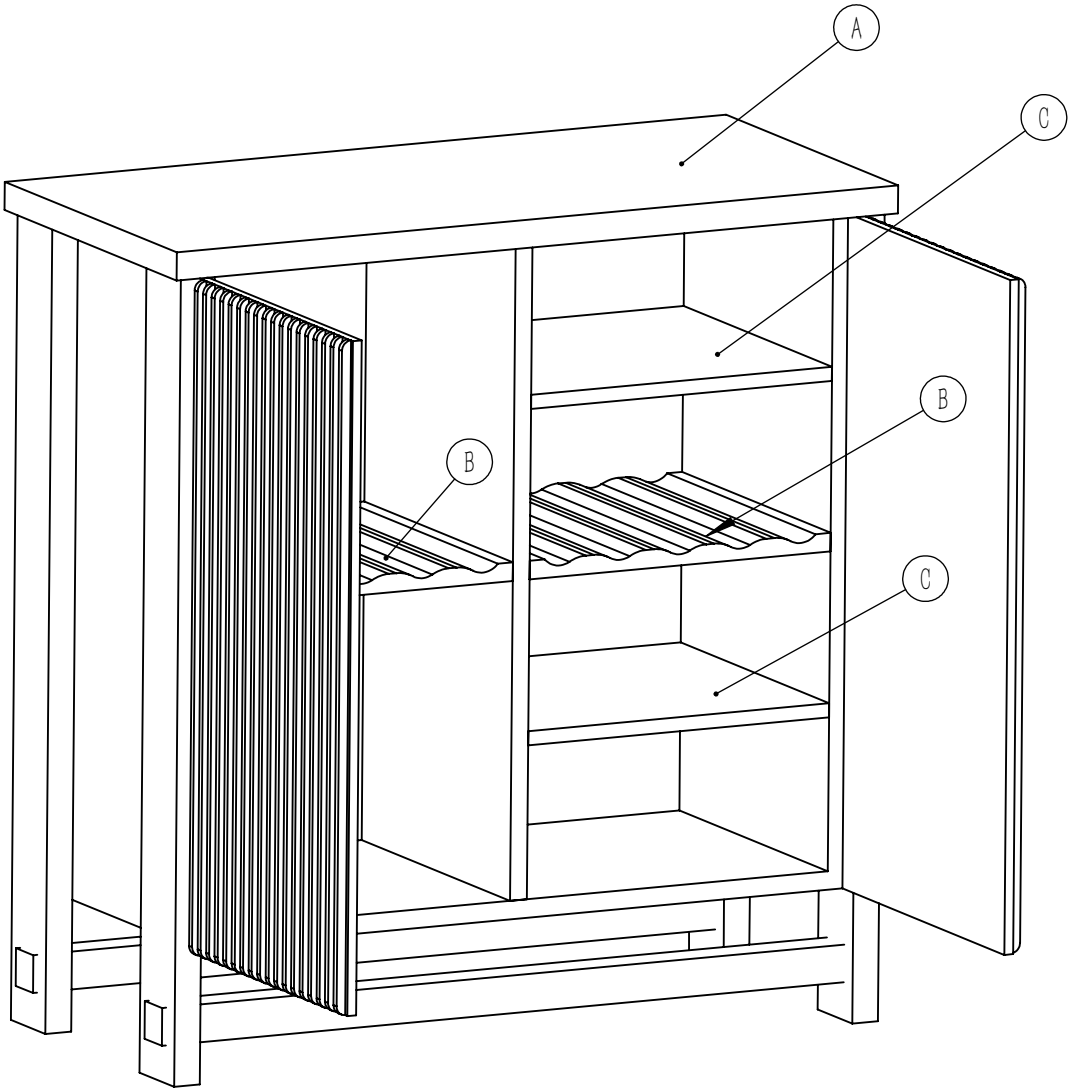

Adjusting Floor Levelers

Check for Stability - Place the furniture in its final position on a level surface. If it wobbles or doesn't sit evenly, the floor levelers need adjusting.

Locate the Levelers - These are small adjustable feet found at the bottom corners of your furniture.

Adjust as Needed - Using your hand or a wrench, turn the levelers clockwise to raise or counterclockwise to lower the furniture. Make small adjustments and check stability after each turn

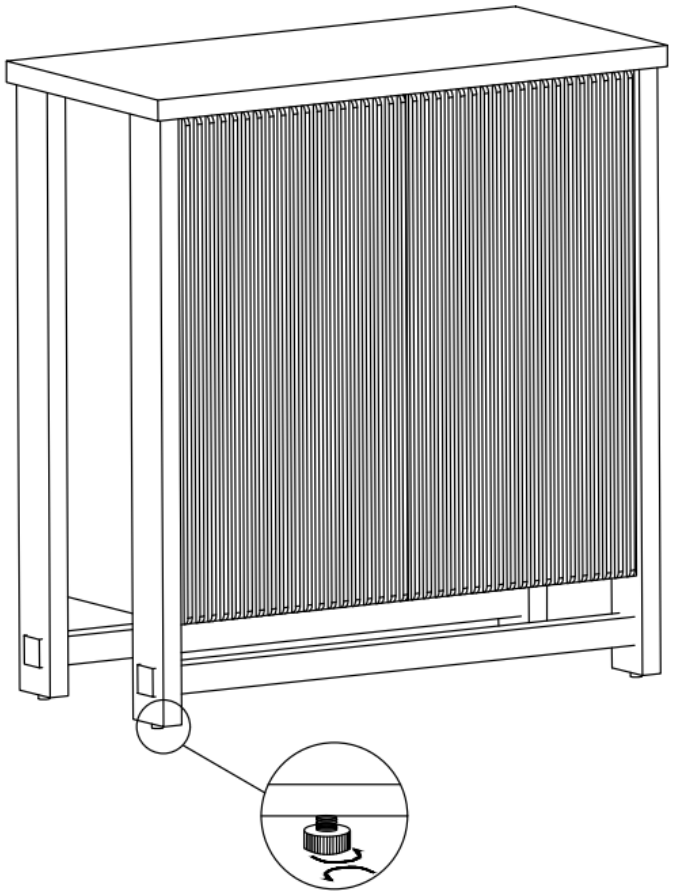

f you need further adjustments, repeat the process in small increments.