Assembly Instruction

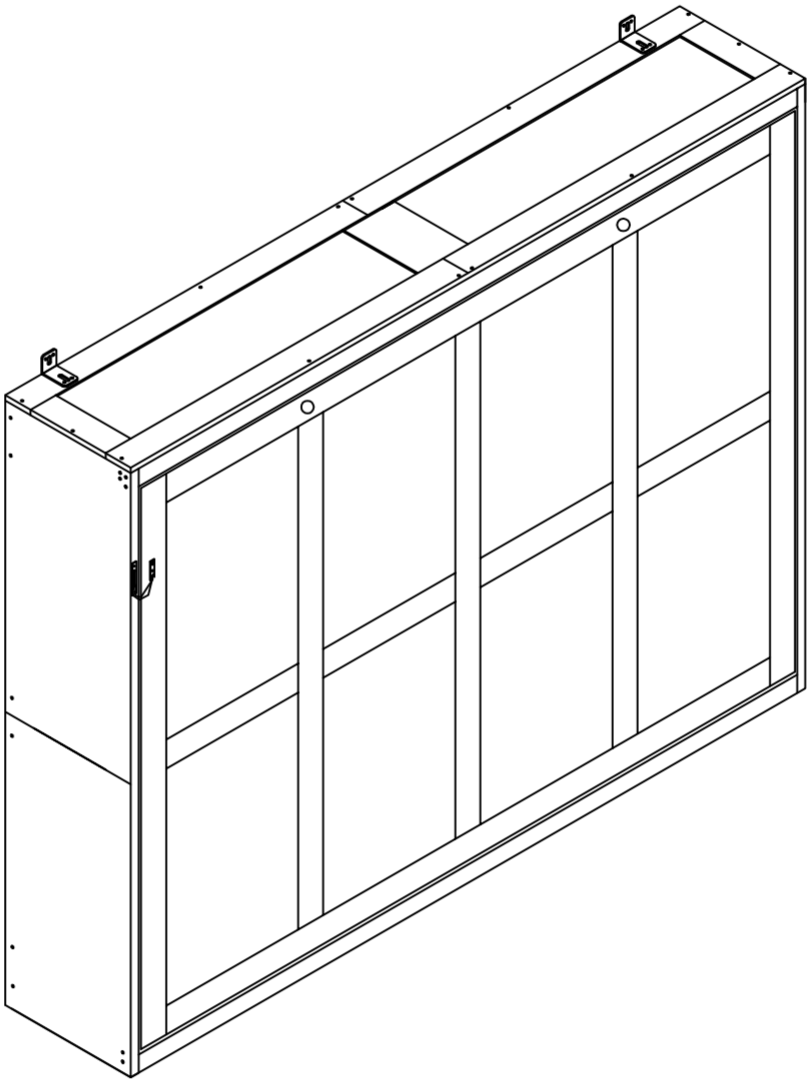

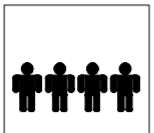
Recomm 4Person

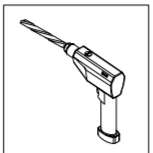
Tools Required

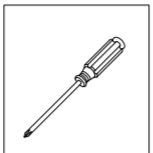
Tools Required


Tools Required

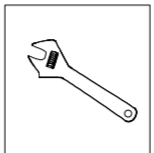
Tools Required


Recommended for professional installation

The maximum width of the mattress that the bed frame will fit is 60inch, the maximum length is 80inch, and the maximum thickness is 10inch. Suggested Mattress Size:Queen, Suggested Mattress Thickness:8inch.

(please note that the mattress weight less than 80lbs may cause the feet of the bed frame are off the ground)

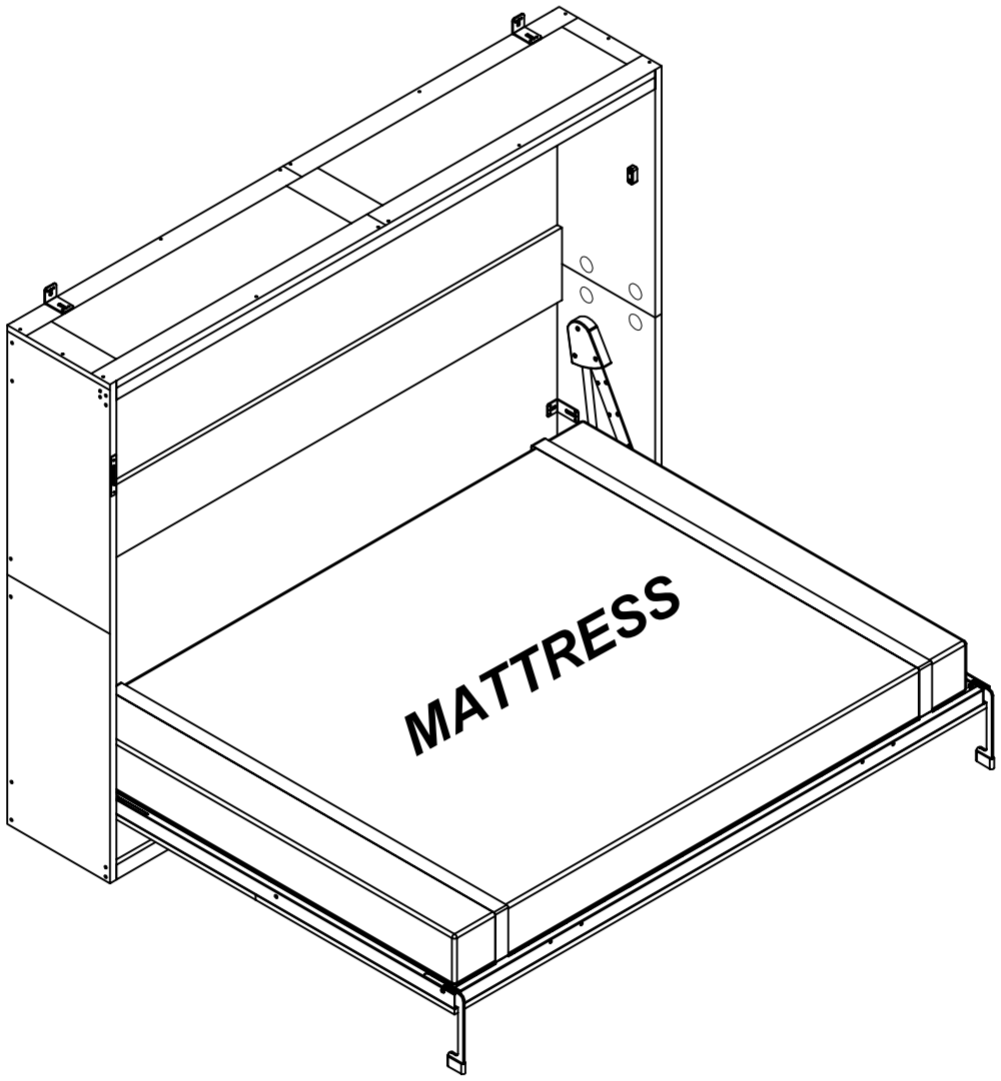

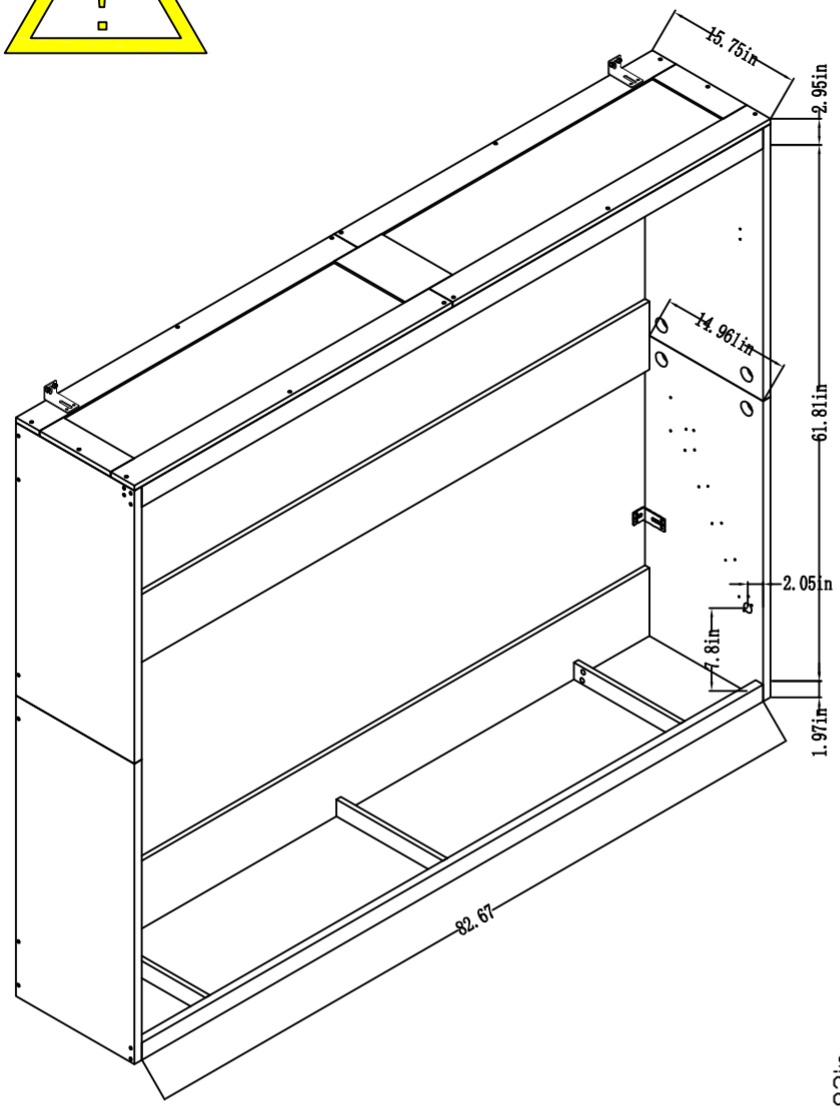

Decorative door panel:
W82xD0.591xH61 inches

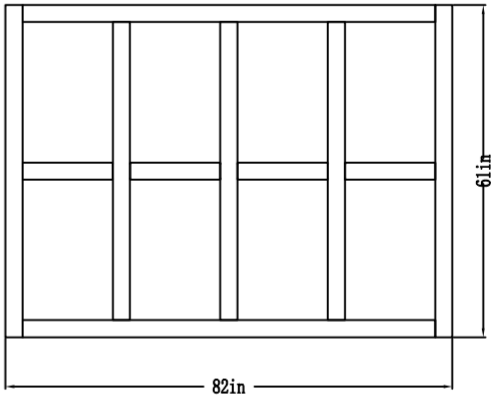

If you choose to DIY the cabinet when just bought our murphy bed hardware kit, Please pay attention to the following keys for cabinet dimension datas and requirements:

1. The internal dimensions of cabinet should be accurate reserved to: W82.67xD14.961xH61.81 inches ;
2. The total dimension of cabinet door panel (divided into 3-4 pieces to be made): W82xD0.591xH61 inches;
3. The baseboard height which from the ground to inside cabinet: 1.97inches;

The cabinet must be fixed to the wall using the matched corner brackets and expansion screws.

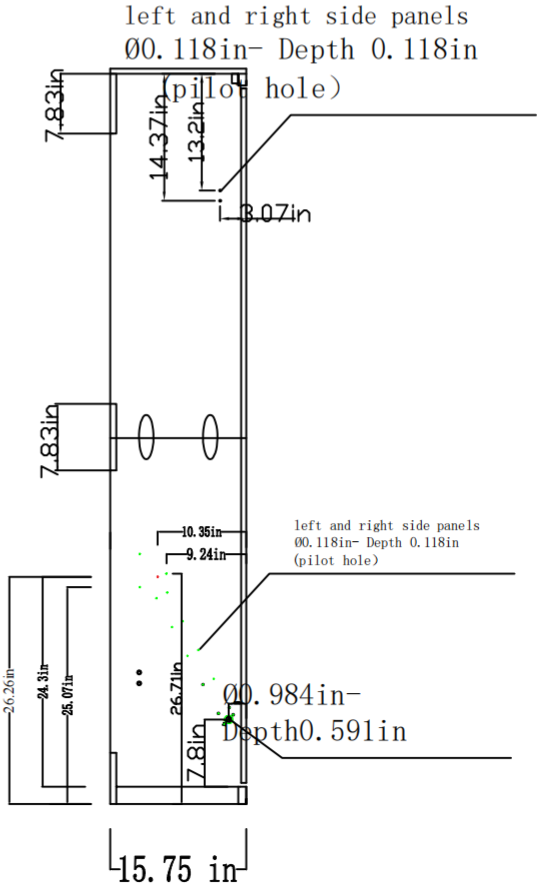

Recommended Maximum Weight

WARNING

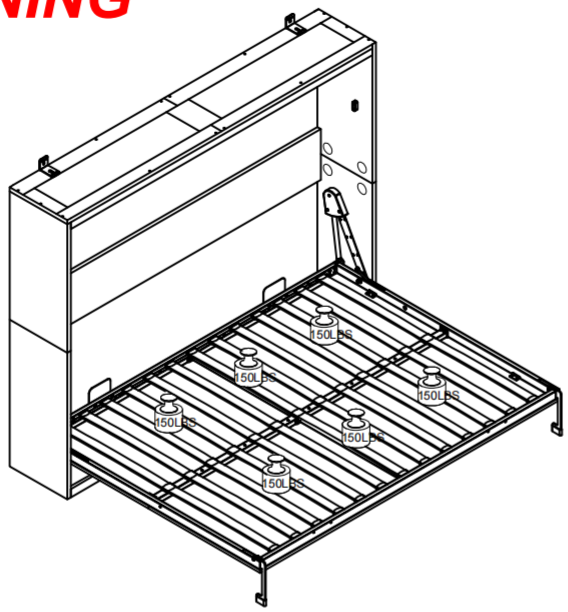



General Guidelines

.Please read the following instruction carefully and use the product accordingly.
.Please keep this manual and hand it over when you transfer the product.
.This summary may not include every detail of all variations and considered steps.Please contact us when further information and help are needed.

Notes

. This unit has been designed to support the maximum loads shown. Exceeding these load limits could cause sagging, instability, product collapse, and/or serious injury.
.The product is intended for indoor use only. The product must be assembled and used in accordance with the provisions of this manual. Personal injury and/or damage to product may occur if products are used outside of their intended purposes and/or if products have been changed/modified from their original design. The seller does not assume any responsibility or liability with respect to any injury/damage caused by incorrect assembly or improper use.
.Avoid long-term exposure to humid environments to prevent mildew.
.Keep the product away from fire sources and high temperatures. Do not expose this product to direct sunlight.
.Do not place any hot project on the surface of the product.
.If there are any defective or missing parts after unpacking, please cease assembly immediately and contact us.
.It is important that each step is performed in correct order to avoid difficulties.
.Please assemble the item on a spacious surface and do not place the unwrapped product directly on the ground to avoid product damage.
.Please do not stand or sit on the wooden boards.
.Please wear gloves during the assembly and/or disassembly process to avoid scratches from any sharp edges.
.Please match the corresponding part and fitting based on the part number in the manual.
.If the part does not match with the fitting, please check the pieces as specified in this manual.
.During assembling, firstly loosely align all screws with corresponding pre-drilled holes and then tighten the screws one by one.
.Periodically inspect screw tightness while the product is in use.If necessary, retighten to ensure structural integrity.
.If you accidently spill water or another liquid on the surface, immediately wipe clean with a dry towel.
.Please keep the product away from sharp, pointed objects and corrosive substances to prevent product damage.
.Please place this item on level, solid ground during use.

Warnings

.During assembly, keep all small parts out of the reach of children.It may be fatal if swallowed or inhaled.
.Children should not climb or play on this product in order to avoid tipping over the furniture and causing serious injury.
.To ovoid the potential dangers of suffocation, please keep all parts and packaging(film, plastic bags,foam,etc.) away from babies and children.
.Keep sharp objects and corrosive items away from the product to avoid any damage or injury.
.Do not shake or move violently during use to avoid tipping over the product.

Parts

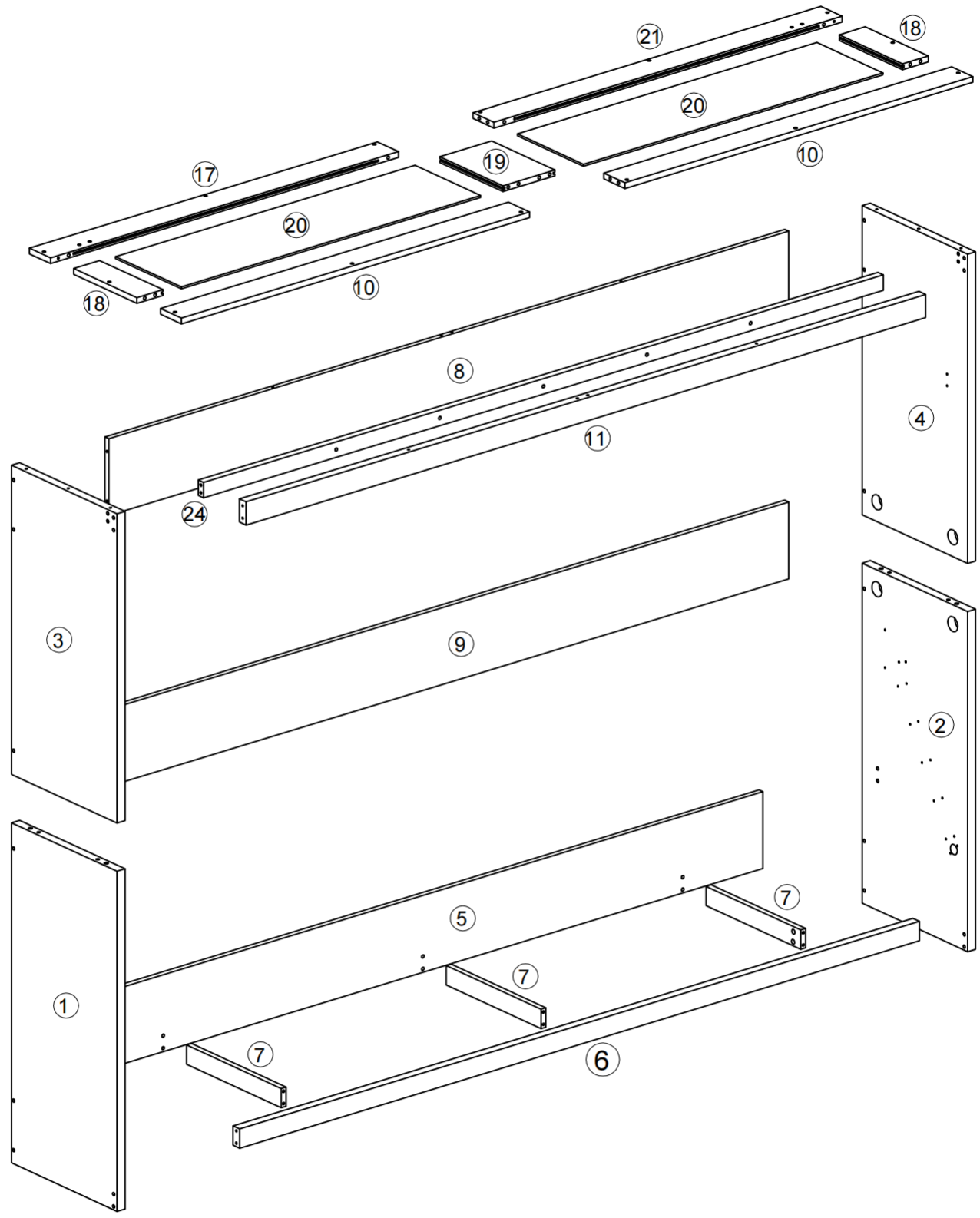

WARNING:

To avoid causing unnecessary troubles,
Please check whether the components with corresponding numbers are installed correctly according to the diagram.

Parts

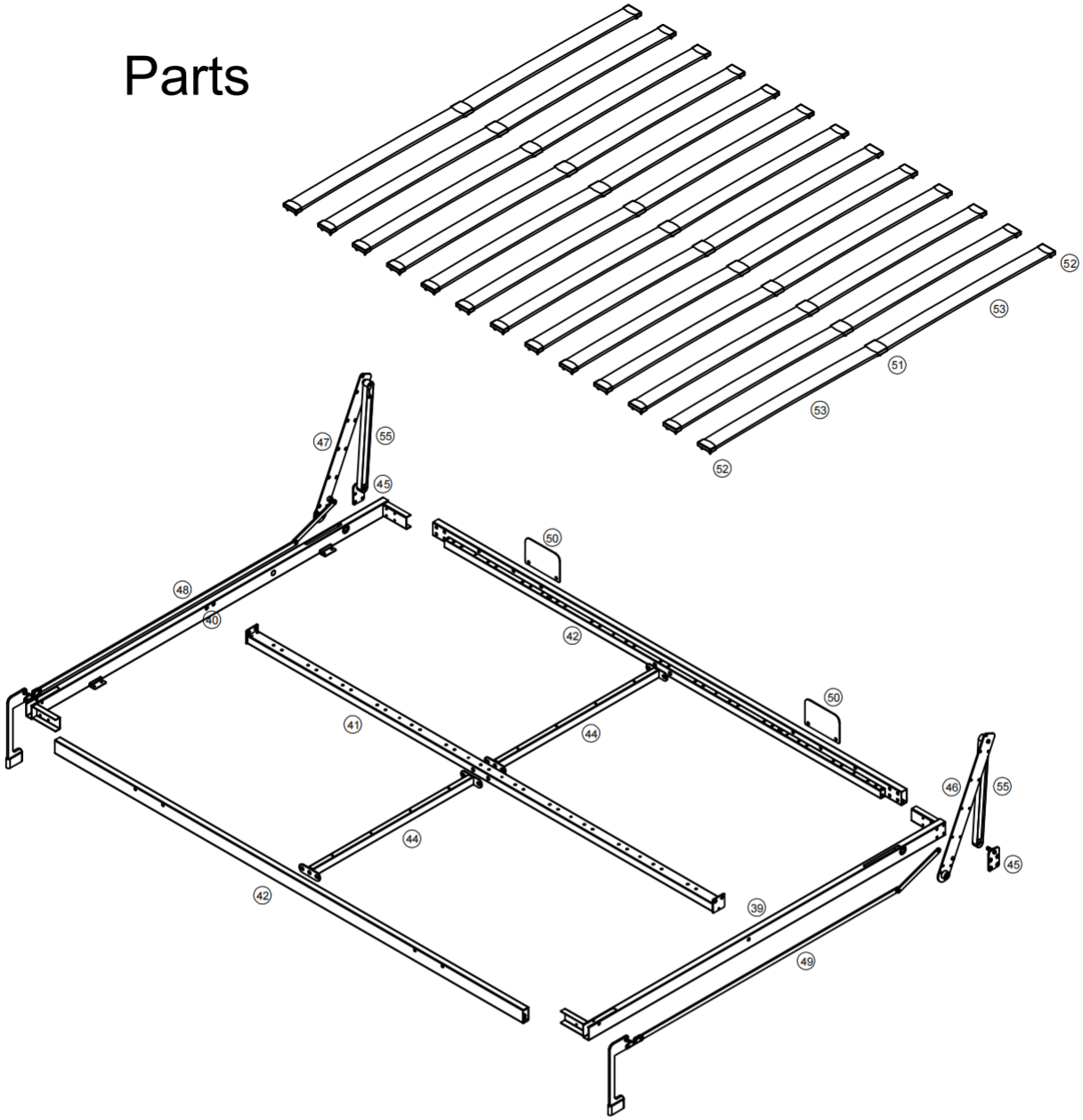

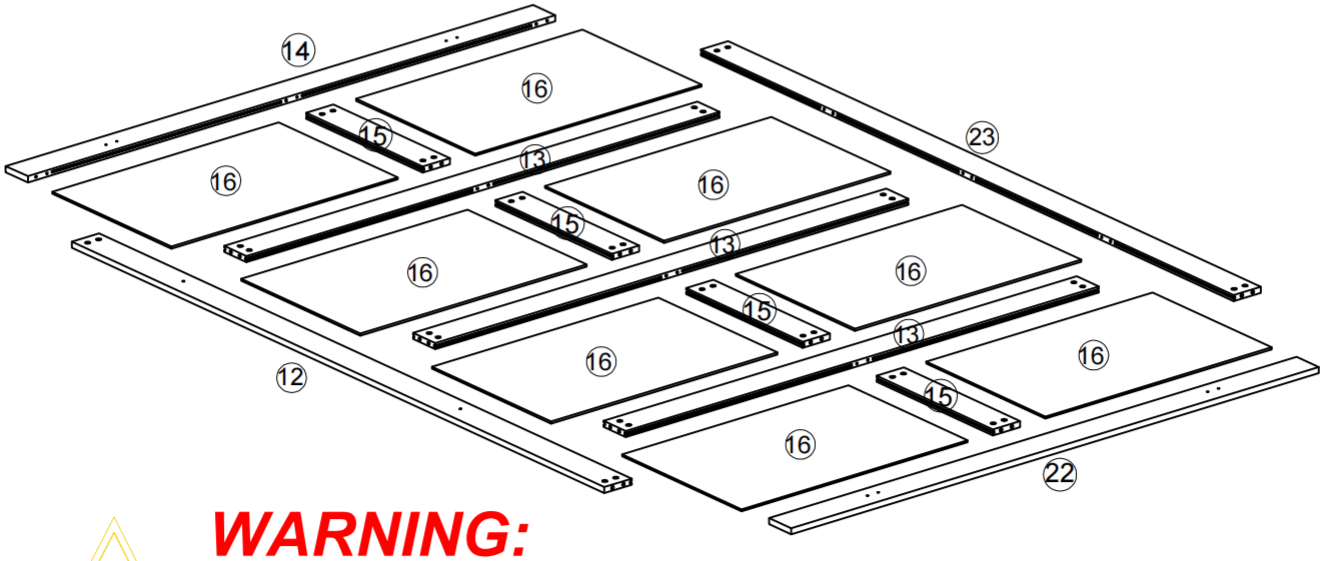

WARNING:

To avoid causing unnecessary troubles,
Please check whether the components with corresponding numbers are installed correctly according to the diagram.

Parts

W5290P533271

① 880*400*25= 1PC

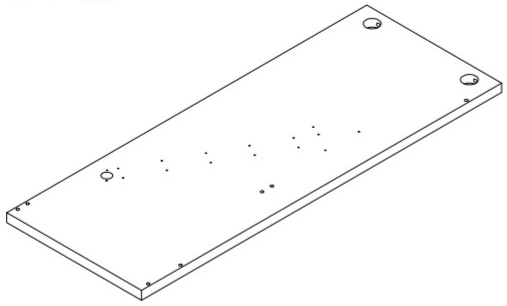

② 880*400*25= 1PC

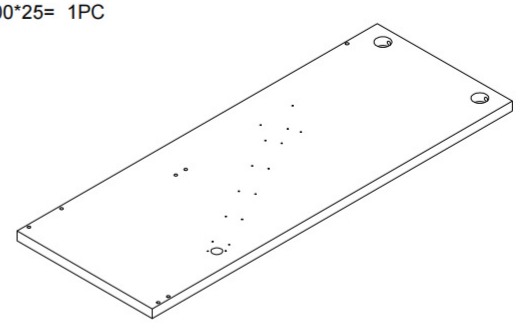

③ 800*400*25= 1PC

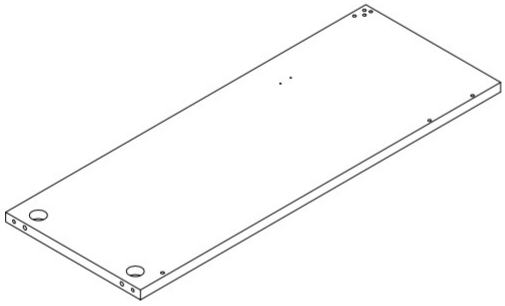

④ 800*400*25= 1PC

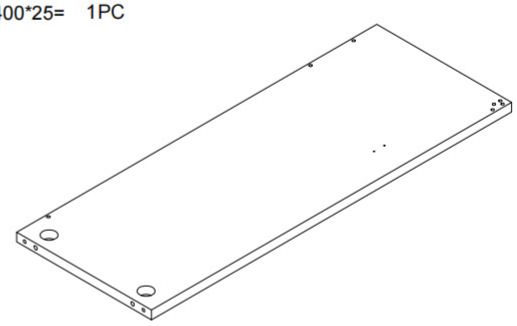

⑯ 665*430*5= 8PCS

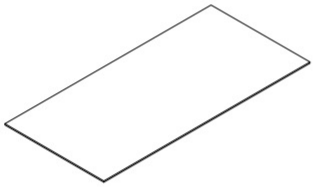

Parts

W5290P533279

(11) 2100*60*25= 1PC

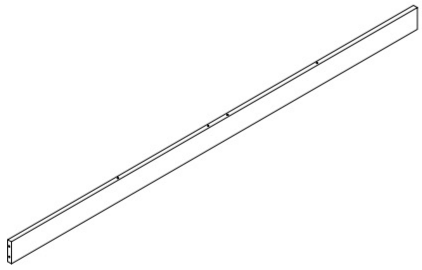

(12) 1923*80*15= 1PC

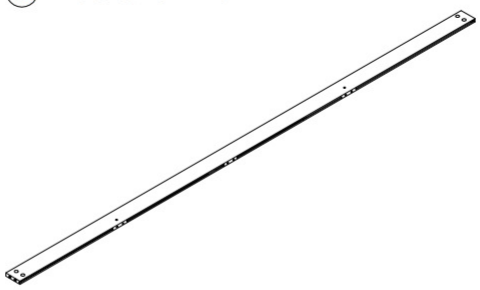

(13) 1390*80*15= 3PCS

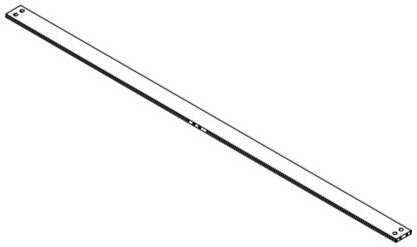

(14) 1550*80*15= 1PC

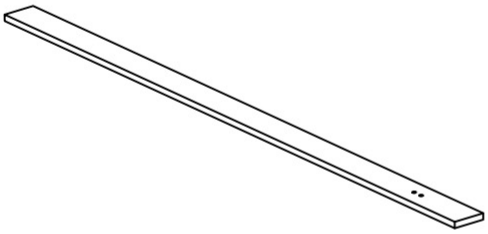

(15) 420*80*15= 4PCS



(5) 2100*199*15= 1PC

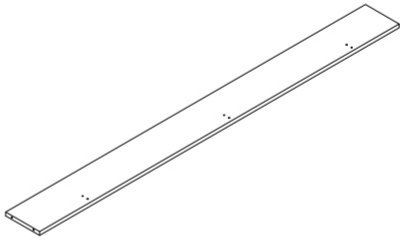

(17) 1075*80*15= 1PC

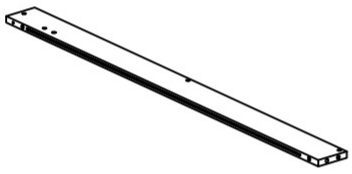

(18) 240*80*15= 2PCS



(19) 240*160*15= 1PC



(20) 925*250*5= 2PCS

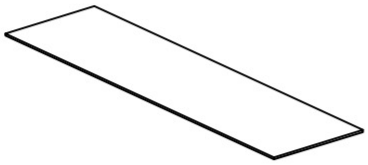

(21) 1075*80*15= 1PC



(22) 1550*80*15= 1PC

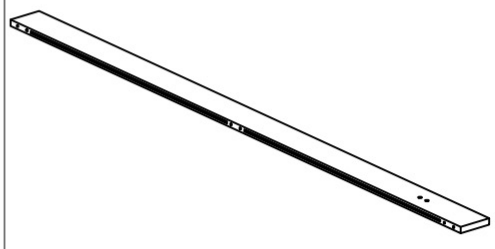

(23) 1923*80*15= 1PC

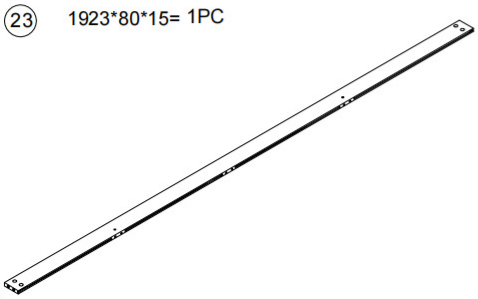

(24) 2100*20*40= 1PC

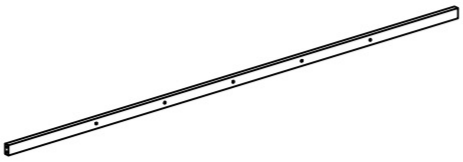

(6) 2100*50*25= 1PC

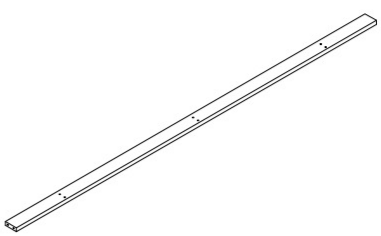

W5290P533279

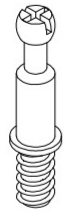

A Φ6*28= 50PCS



B Φ15*10= 50PCS

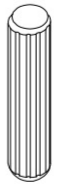

C Φ8*30= 16PCS

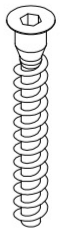

D Φ6*50= 40PCS

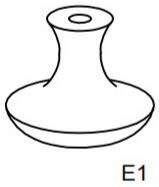

E1 E2

E Φ177*9*25= 2PCS



F 4MM= 1PCS



J M6x30= 5PCS

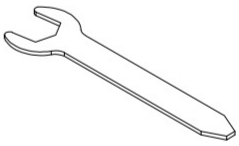

K 14mm= 2PCS

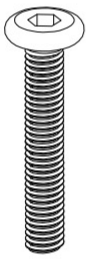

L M6x40= 4PCS

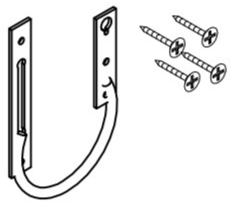

H1 = 1PCS

7 359*50*15= 3PCS

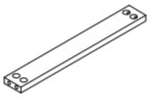

8 2100*199*15= 1PC

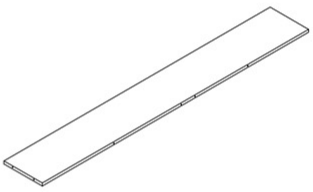

9 2100*199*15= 1PC

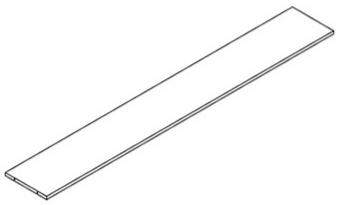

10 1075*80*15= 2PCS

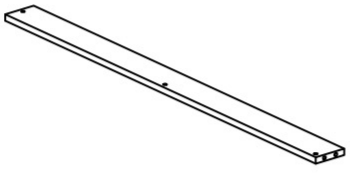



G1

M8*75= 4PCS

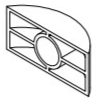

G2

29*15*8= 8PCS



G3

M8= 8PCS

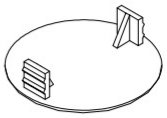

G4

Φ38= 8PCS

G

W5290P533306

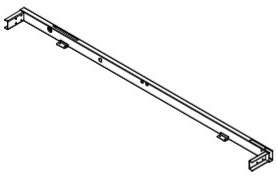

39 1550*125*50= 1PCS



40 1550*125*50= 1PCS

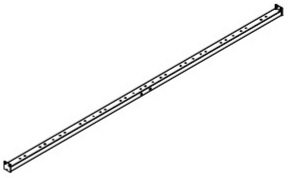

41 2031*50*50= 1PCS

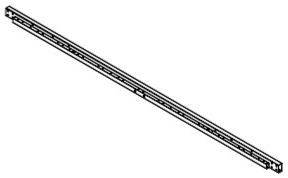

42 2035*50*45= 2 PCS

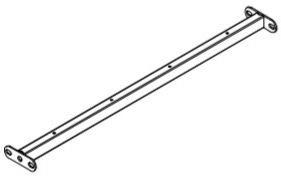

44 706*90*30= 2PCS

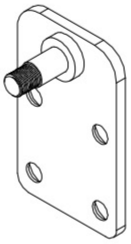

45 73*45*29= 2 PCS

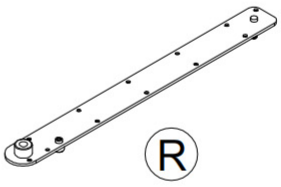

46 500*50*33= 1PCS

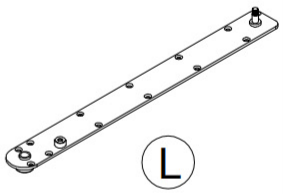

47 500*50*33= 1PCS

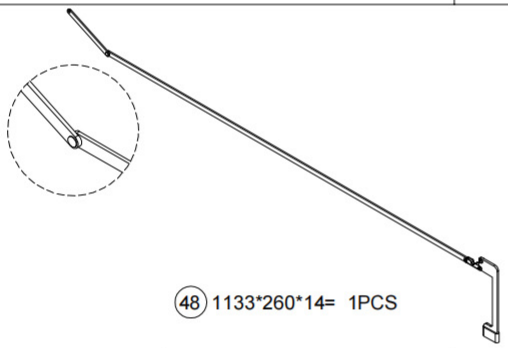

48 1133*260*14= 1PCS

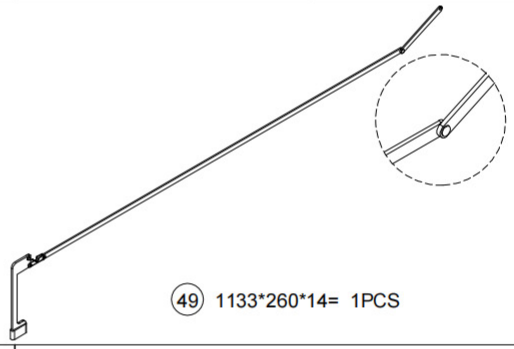

49 1133*260*14= 1PCS

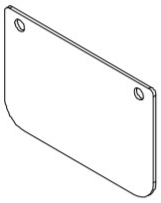

50 150*100*2.5= 2PCS

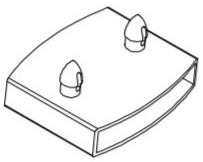

51 57*48*26.5=14 PCS

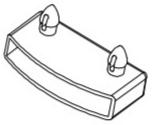

52 57*29*27=27 PCS

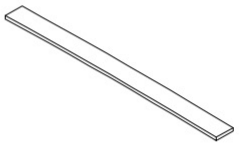

53 742*52*9= 26PCS

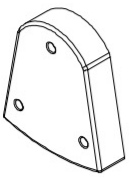

54 144*123*33= 2PCS



55 605*22= 2 PCS

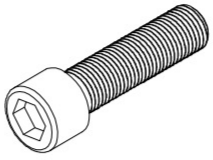

56 M12*45= 2PCS

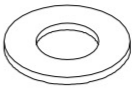

57 Φ12*24*1.5= 2PCS

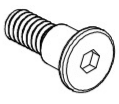

58 7.8*M6*19= 2PCS

W5290P533306

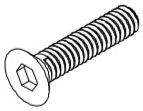		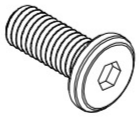	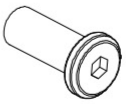	
59 M6*20= 8PCS	60 M6*15= 30 PCS	61 M8*20= 13 PCS	62 M6*20*Φ8= 4 PCS	63 M6= 2PCS
	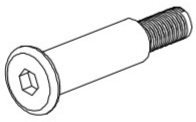	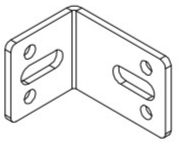	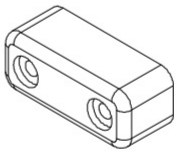	
64 M8= 5 PCS	65 7.8*M6*35= 2PCS	66 70*50*4= 4PCS	67 50*20*20= 2PCS	68 M4*20= 26+2 PCS
		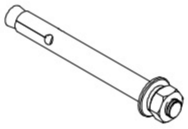	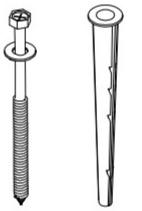	
69 M4*35= 11 PCS	70 M4*42= 36 PCS	71 M8*100= 4PCS	72 8*100 = 4PCS	73 4mm= 1PCS
	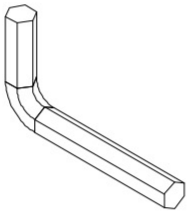			
74 5mm= 1PCS	75 10mm= 1PCS	76 = 2PCS	77 M4*13= 9 PCS	

Using Camlocks(Single head cam)

Step 1

Connect the male camlock as directed in the assembly instructions using a screwdriver.

1

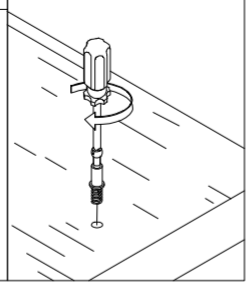

Step 2

Push the male camlock into the entry hole.

2

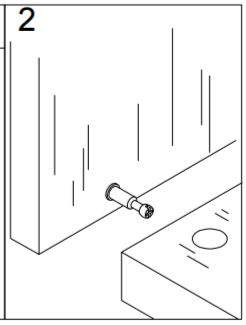

Step 3

Insert the female camlock as shown in the instruction.

Note: ensure that the arrow on the top of the camlock points towards the entry hole for the male camlock.

3

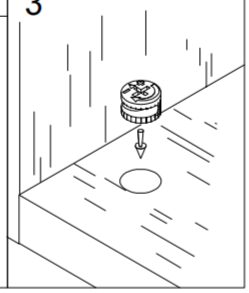

Step 4

Turn the female camlock 180 degrees clockwise with a screwdriver to complete the locking.

4

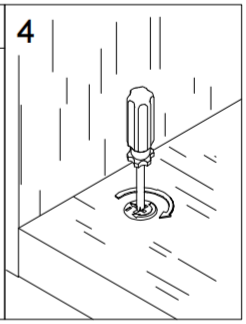

Using Camlocks(double heads cam)

Step 1

Push the male camlock into the entry hole as instructed in the assembly manual, ensuring that the exposed portions at both ends of the male camlock are even.

1

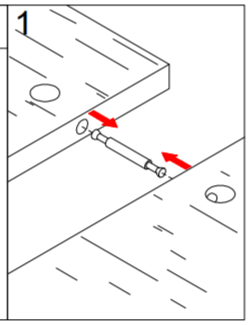

Step 2

Insert the female camlock at one end first as shown in the instruction.

Note: ensure that the arrow on the top of the camlock points towards the entry hole for the male camlock.

2

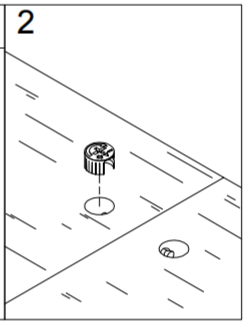

Step 3

Gently turn the placed female camlock 90 degrees clockwise with a screwdriver (it is necessary to ensure that the exposed part of the other end of the male camlock remains unchanged).

3

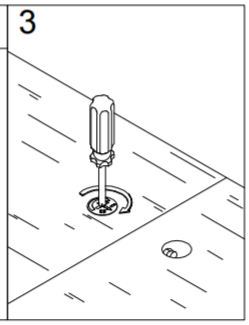

Step 4

Insert the female camlock into the other end as shown in the instruction.

Note: ensure that the arrow on the top of the camlock points towards the entry hole for the male camlock.

4

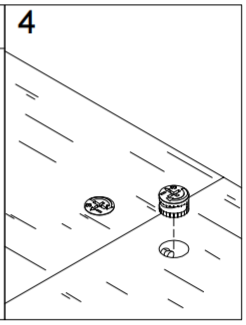

Step 5

Turn the female camlock 180 degrees clockwise with a screwdriver to complete the locking.

5

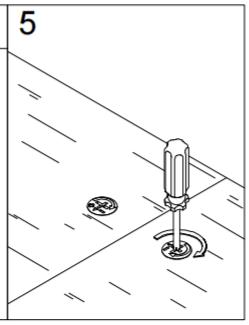

Step 6

Turn the previously placed female camlock an additional 90 degrees clockwise with a screwdriver to complete the locking.

6

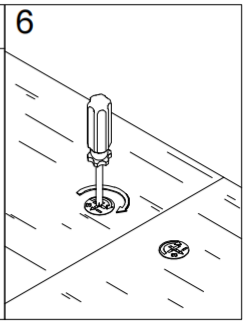

STEP1

①*1	②*1	③*1	④*1	G*4	C*4

K*2

ATTENTION:

This step involves similar panel components. To prevent assembly errors, please carefully verify the positional relationship of the hole positions in the enlarged diagram.

Also make sure that 1# attaches to 3#, and 2# attaches 4#.

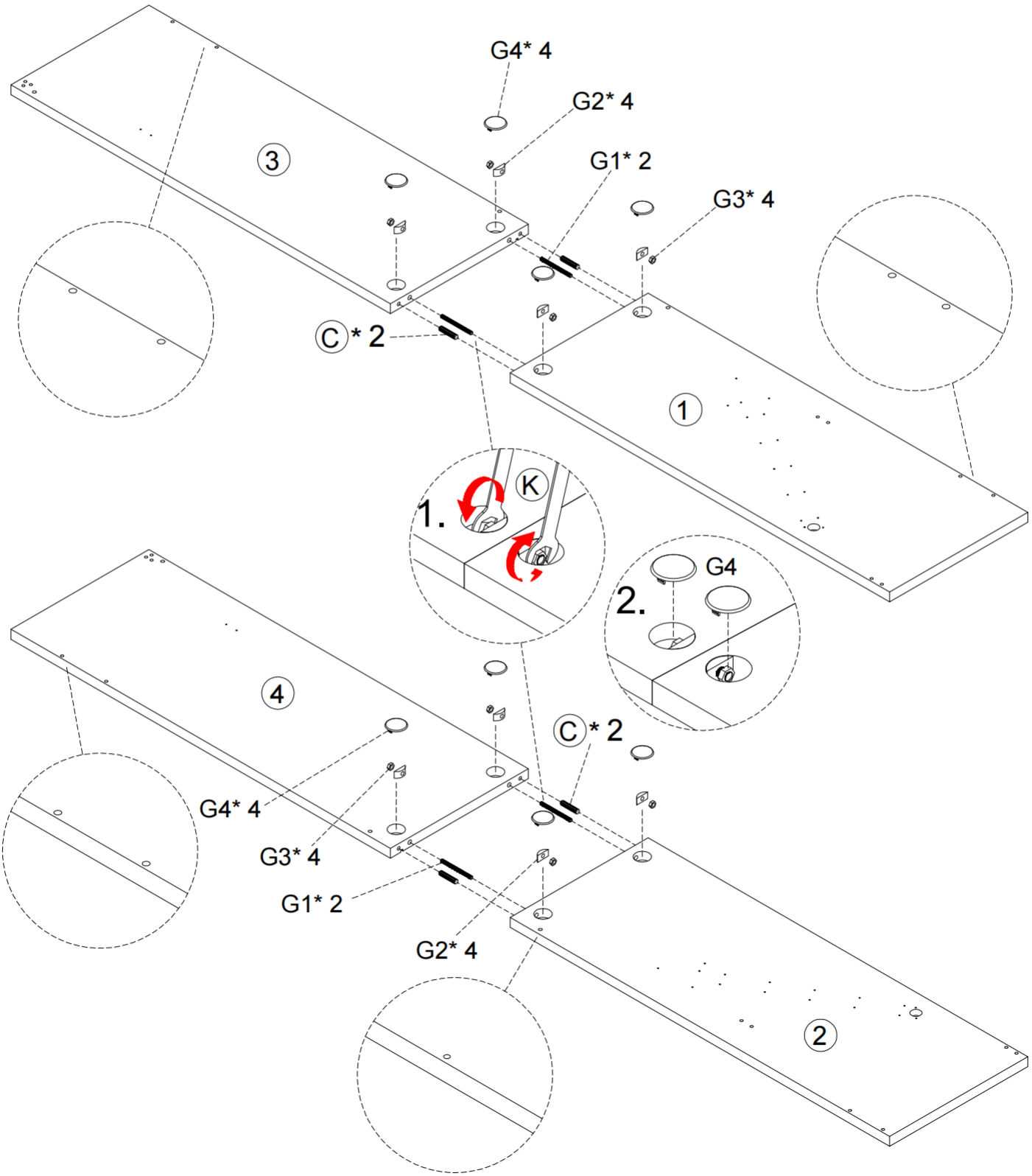

STEP2

5*1	6*1	7*3	A*6	B*6

D*6	F*1

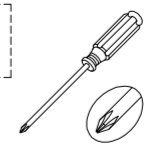

Tools Required

STEP3

24*1	11*1	J*5	F*1

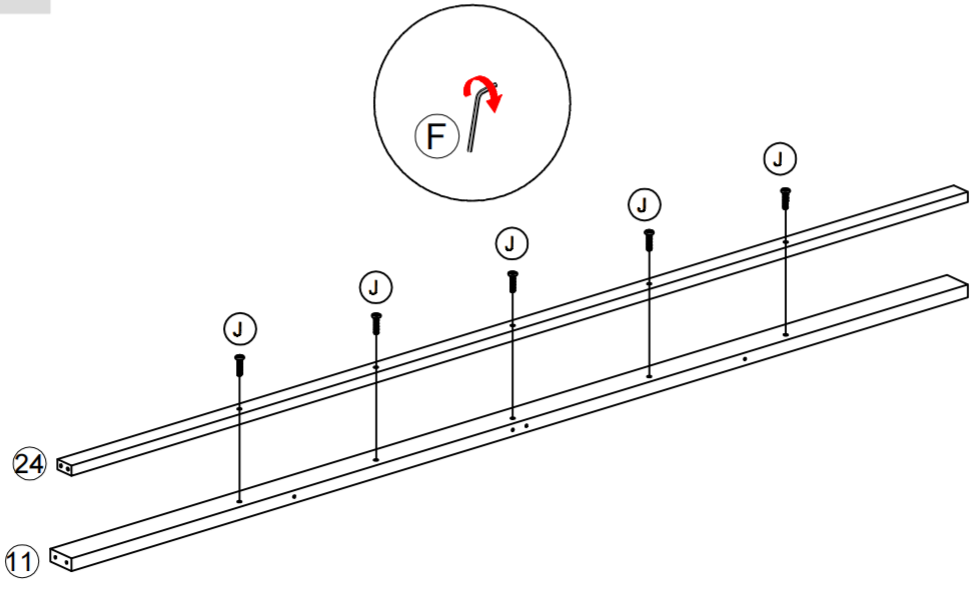

STEP4

8*1	9*1	L*4	D*20
11*1		F*1	

ATTENTION:

There are quite a few components to be installed in this step.

Please pay attention to checking whether all components are complete!

Put them together in the right postion before fastening the screws!!

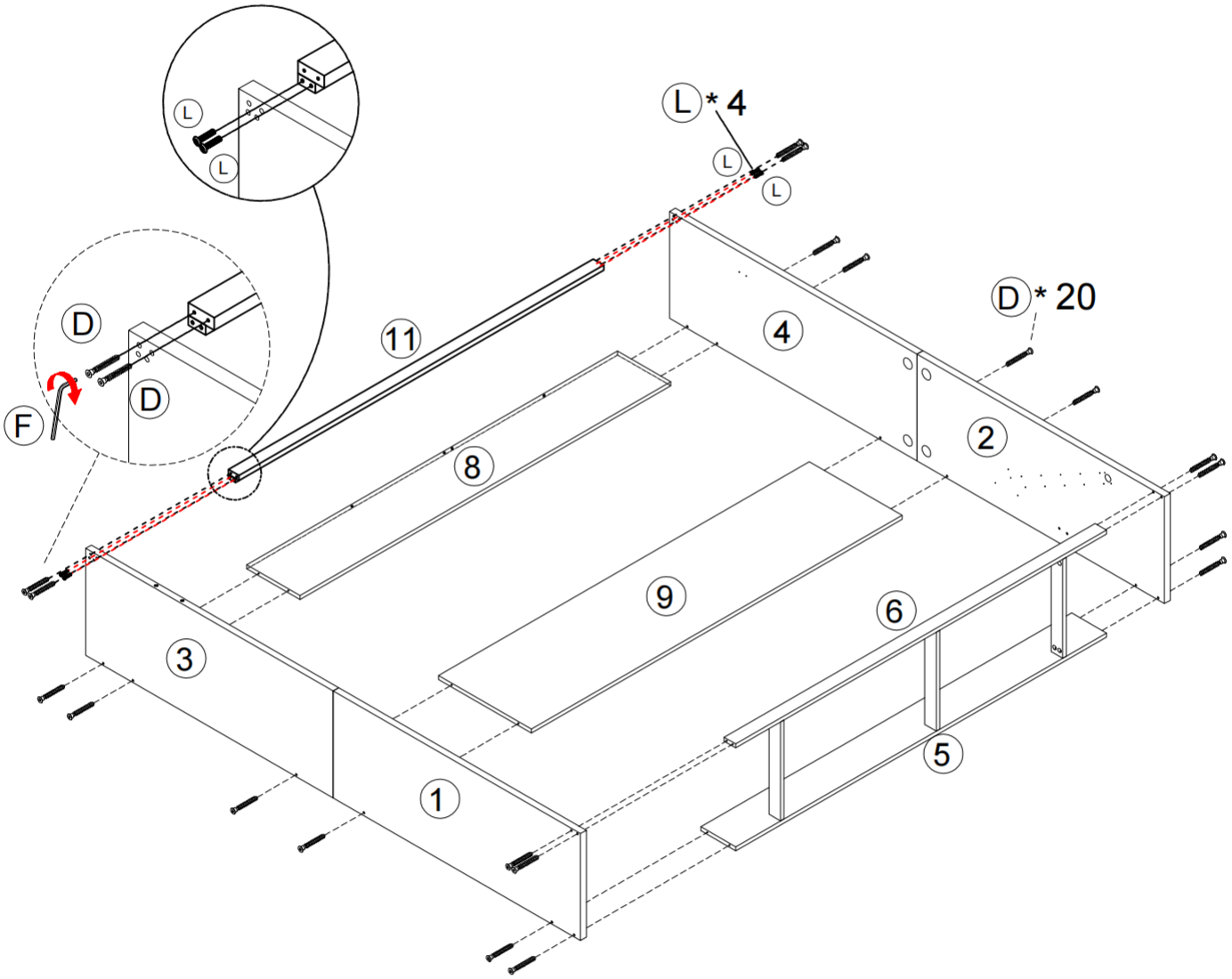

STEP5

⑩* 2　Ⓐ* 8　Ⓒ* 4

⑰* 1　㉑* 1

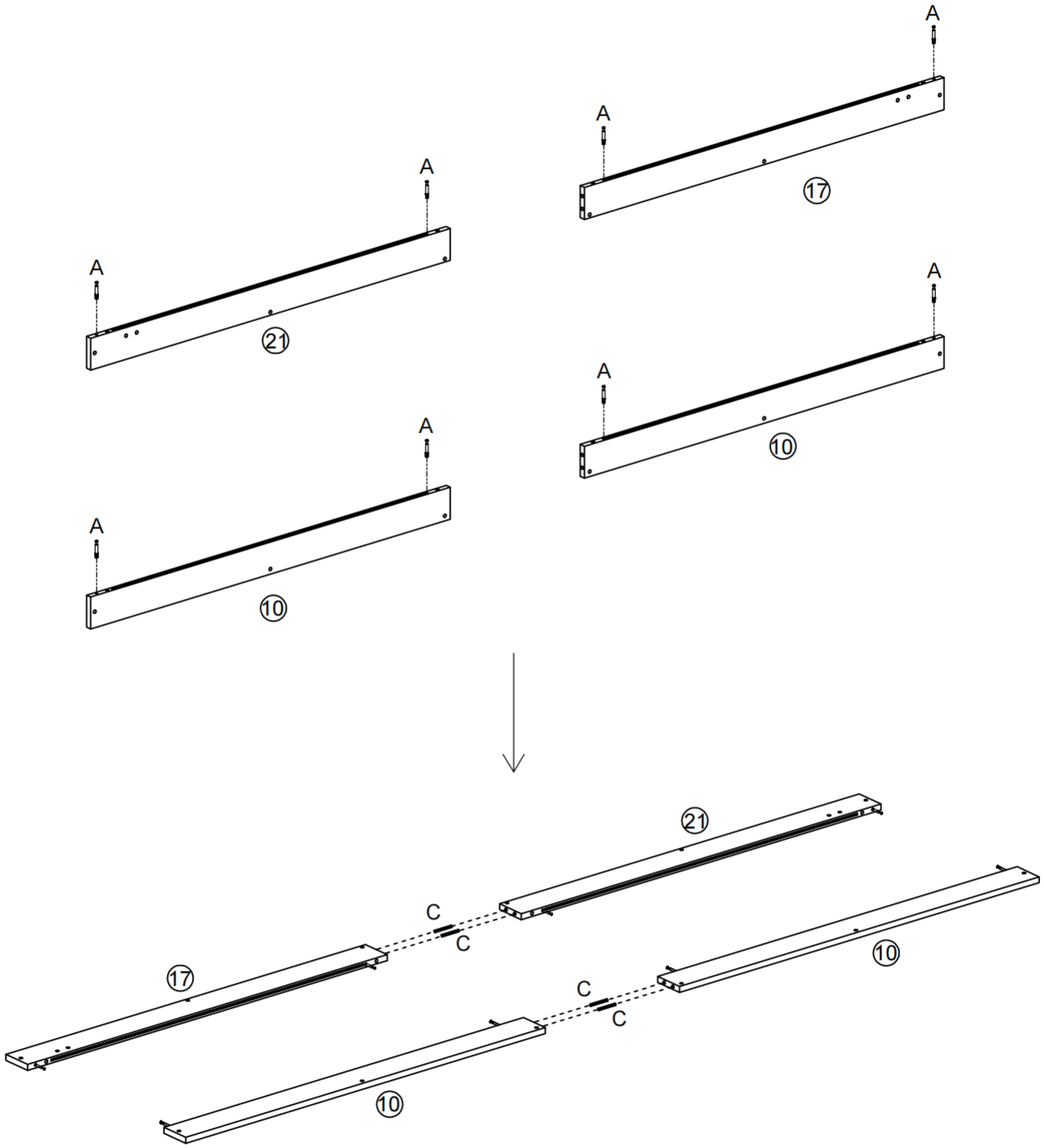

STEP6

⑩* 2 ⑱* 2 Ⓑ* 8 Ⓒ* 8

⑳* 2 ⑲* 1

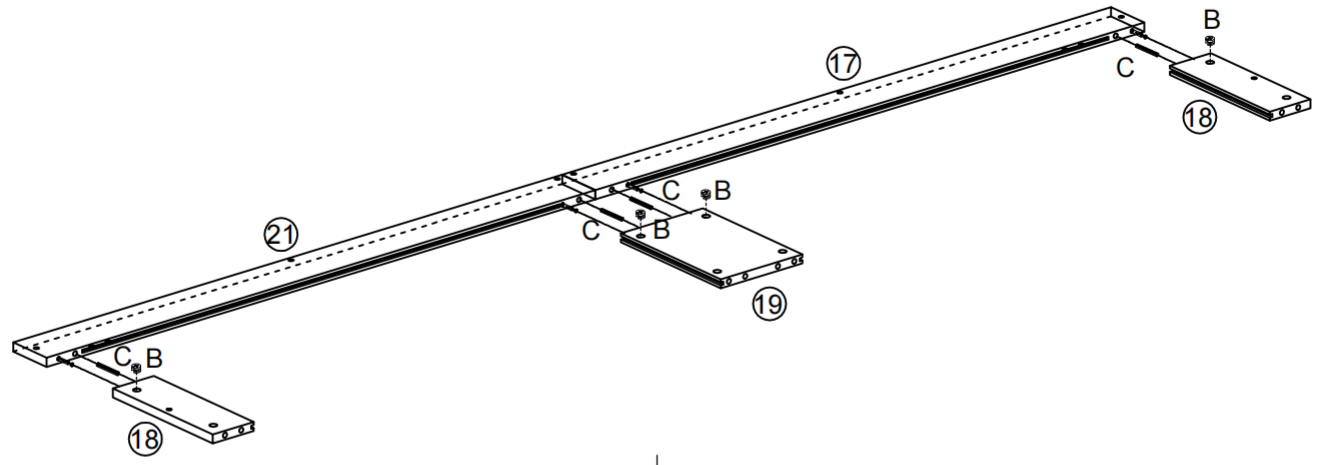

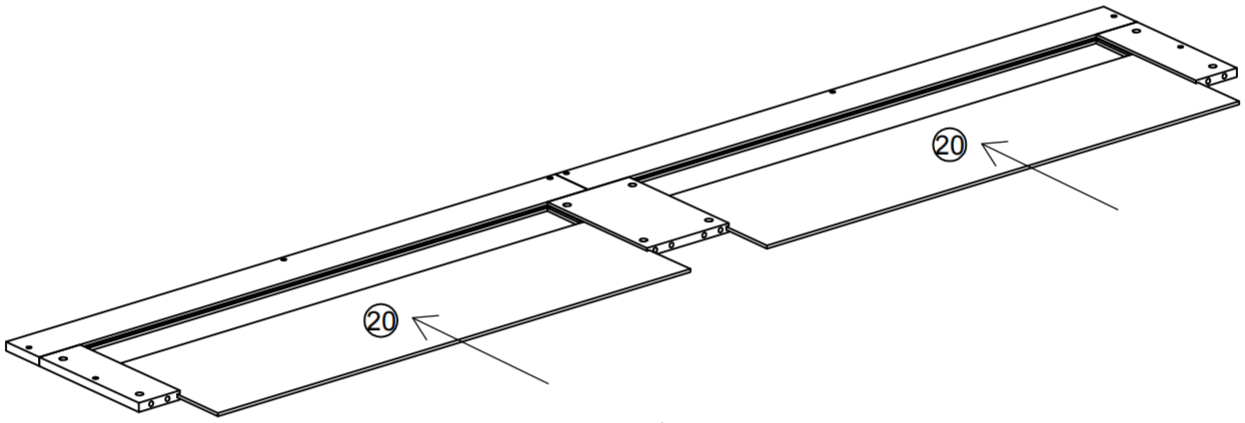

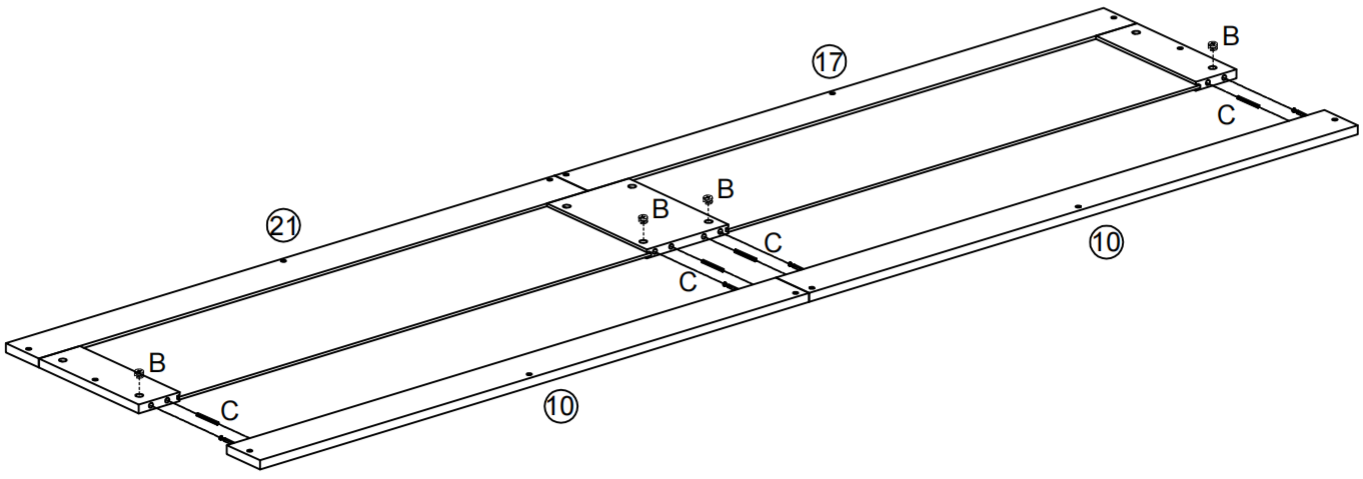

STEP7

Ⓓ* 14

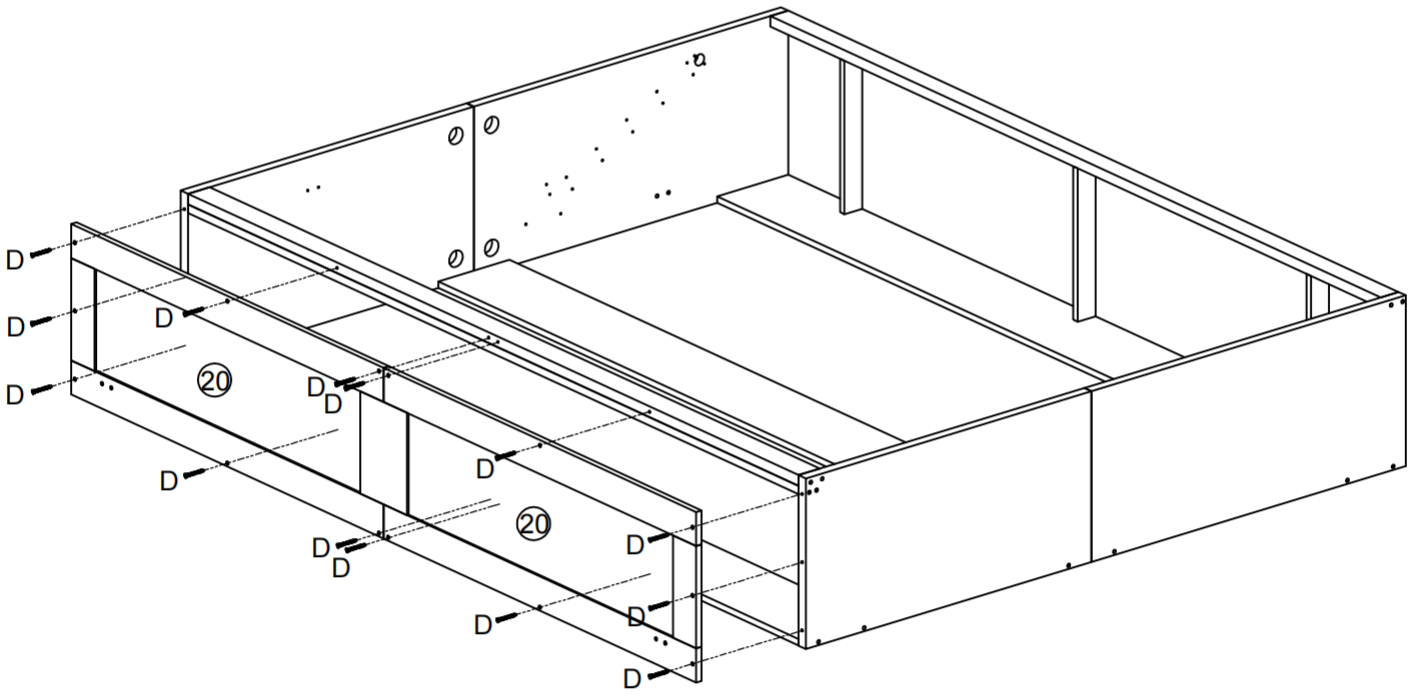

WALL ANCHORING REQUIREMENTS & INSTALLATION RECOMMENDATIONS

Important information to read before starting the assembly.
Keep this information for future reference.

IMPORTANT WARNINGS

Risk of serious injuries if the wall bed tips over.
To prevent wall bed from tipping over, mount it permanently to the wall.
Only a qualified person* must carry out the installation and any possible adjustment of the wall bed (including disassembly). If the wall bed is not firmly mounted (anchored) to the wall, it might tip over and cause serious injuries to the installer, users of the bed as well as the people near the bed.
The choice of wall anchoring depends on the type of wall. Use wall anchors suitable for the wall material.

* Qualified person: it is necessary to have a good understanding of the wall structure where the bed is anchored, including the positioning of the wall studs and structural components in the case of a wood or metal structure. If you do not have the necessary skills, make sure that the wall anchoring is done by someone who has the qualifications and required knowledge. When you choose the installer, make sure to comply with all applicable regulations in the province, state or country where the furniture is installed.

IMPORTANT WARNINGS

INSTALLATION AND APPROPRIATE HARDWARE

Using appropriate hardware, all the anchor screws of the wall bed must be firmly secured to the wood or metal studs, the structural components, or a masonry wall.

Only wall anchor screws for wood-frame walls are provided with this bed.

NEVER USE DRYWALL ANCHOR SCREWS OR SECURE THE BED TO DRYWALL

See wall anchoring requirements and installation notes provided in the instruction manual, according to the type of wall, and use the appropriate anchors such as described in this manual.

NUMBER OF SCREWS NEEDED

Two (2) screws are required for each anchor point. Four (4) wall anchor points are necessary for the proper installation of the wall bed. So you need a total of eight (8) wall anchor screws.

THE SCREWS MUST BE VERY WELL ANCHORED TO THE STRUCTURAL COMPONENTS OF THE WALL.

** A CERTIFIED CONSTRUCTION PROFESSIONAL, IN COMPLIANCE WITH APPLICABLE REGULATIONS IN THE PROVINCE, STATE, OR COUNTRY WHERE THE FURNITURE IS INSTALLED.

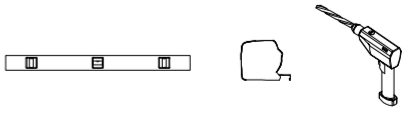

Tools Required

WARNING:

There is a risk of serious injury due
to the wall-mounted bed tipping over.
To prevent the wall-mounted bed from tipping over,
it must be permanently secured to a brick wall.
If the wall structure is not masonry, qualified professionals
are required to perform the wall anchoring.

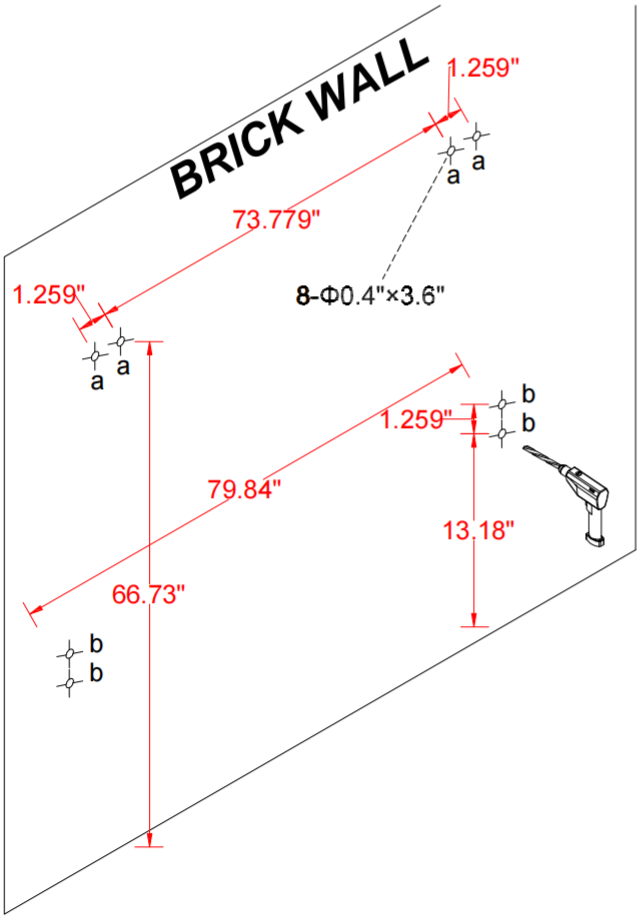

1,
Use a marker pen, a tape measure,
and a spirit level to mark positions
on the brick wall according to the
positions shown in the diagram.
Use an electric drill to create
4 A holes and 4 B holes at the
marked positions; Hole A has a diameter
of 0.4 inches and a depth of 3.6 inches;
Hole B has a diameter of 0.4 inches
and a depth of 3.9 inches.

71 * 4 72 * 4



Tools Required

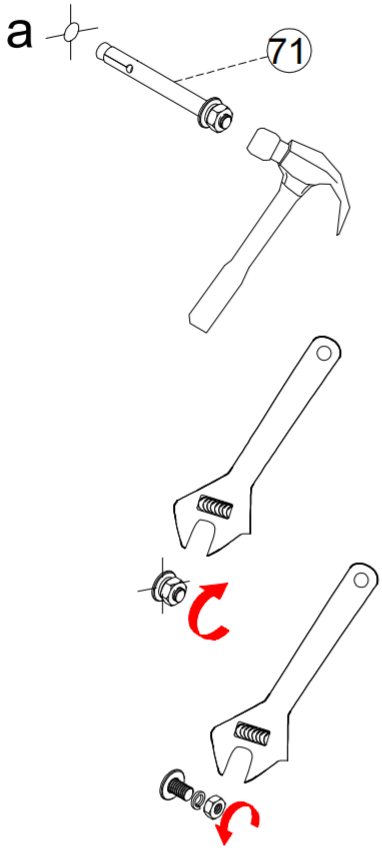

2,
Gently tap the No. 71 expansion bolts into the holes with a hammer until 0.04 inches are exposed outside.
Use an adjustable wrench to tighten the nuts on the expansion bolts clockwise with force.
Use an adjustable wrench to remove the nuts and anti - slip washers from the expansion bolts.

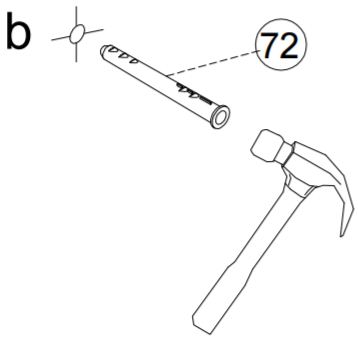

3,
Gently tap the No. 72 expansion rubber hose into hole B with a hammer until the end ring of the expansion rubber hose is flush with the wall.

66 * 4 72 * 4

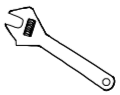

Tools Required

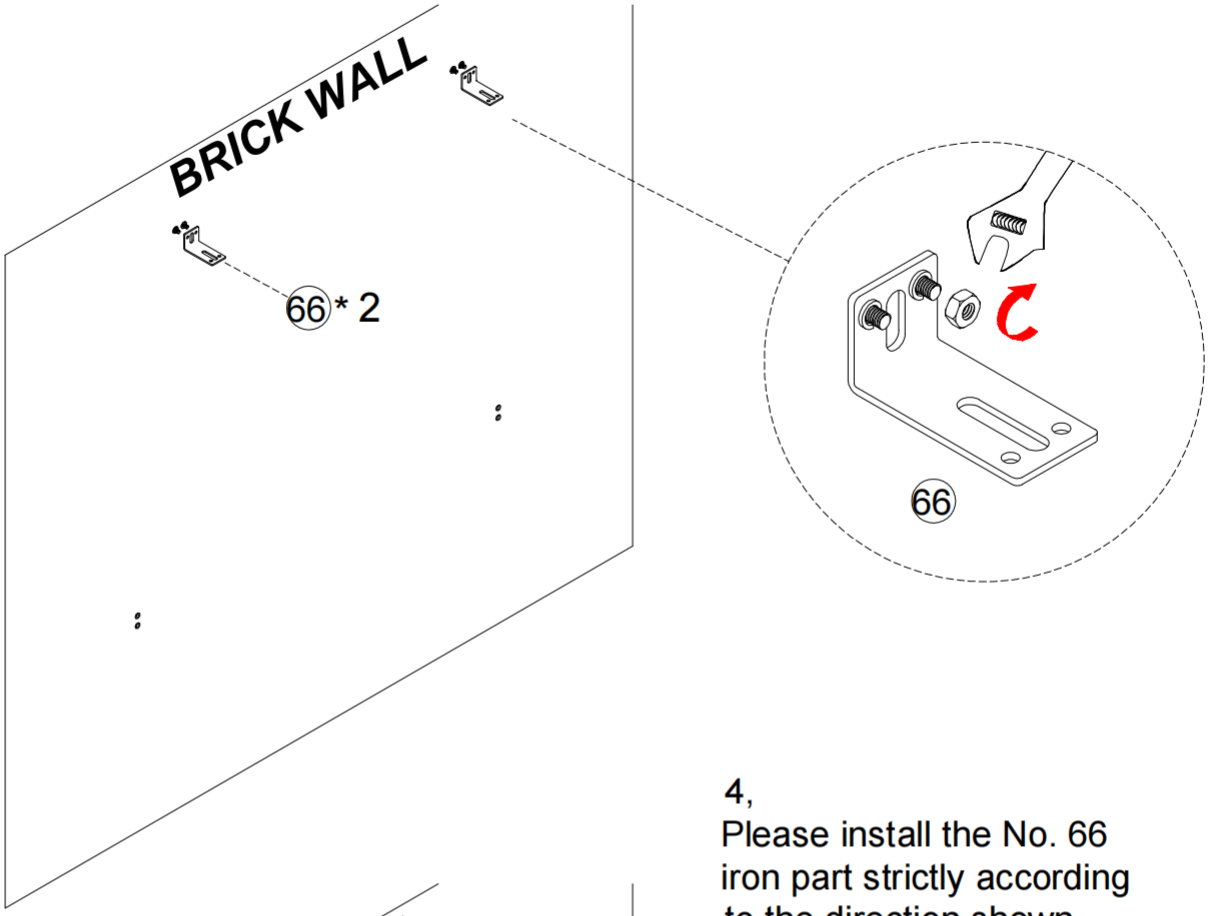

4,
Please install the No. 66 iron part strictly according to the direction shown in the diagram.

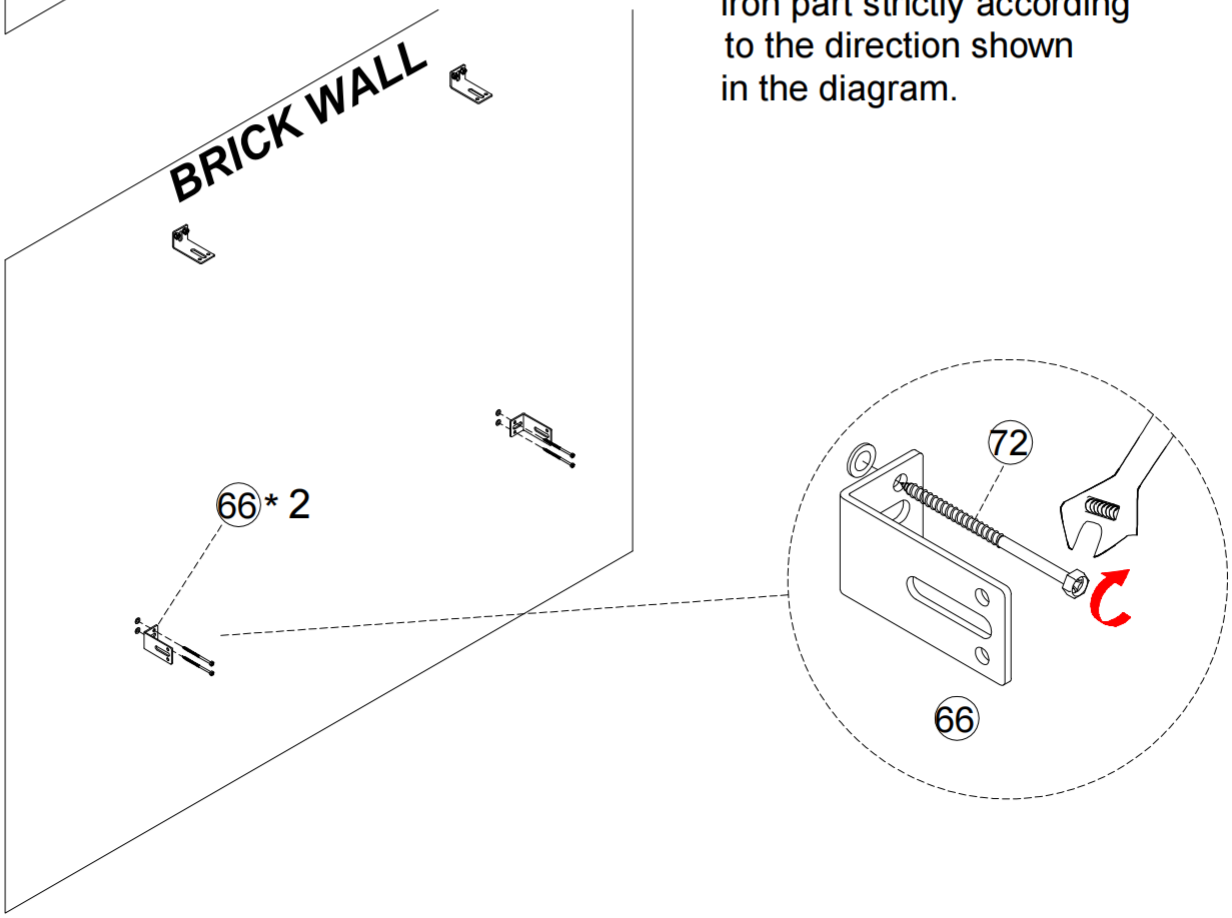

STEP8

60 * 8

WARNING

For your safety

This step requires at least 4 people to complete together. One person is responsible for observing and guiding the moving direction of the cabinet body; two people respectively cooperate on both sides of the cabinet body to move it to the accurate position; and one person is responsible for keeping it upright to prevent the cabinet body from tipping over.

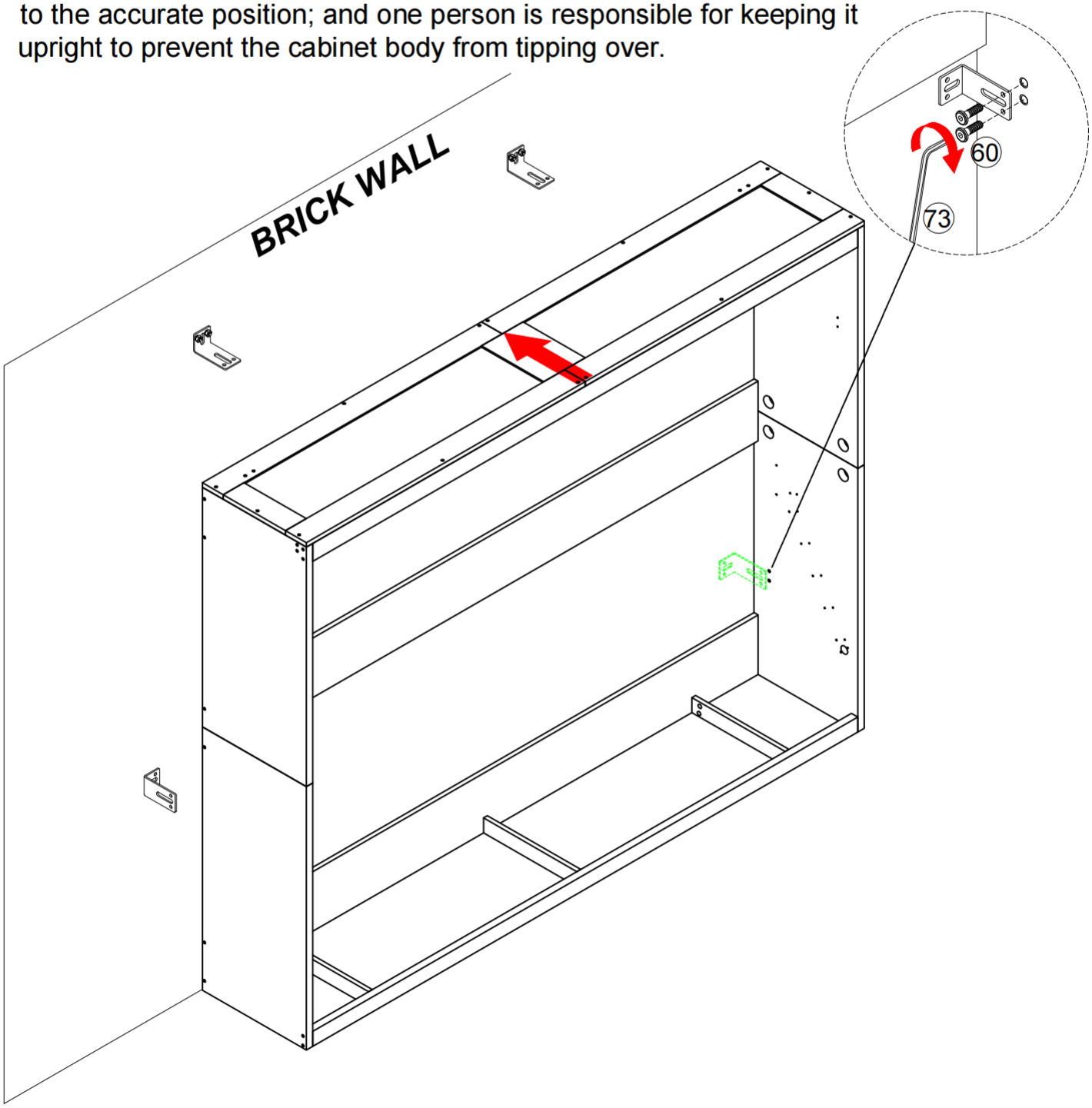

STEP9

⑫* 1 ⑬* 3 ⑭* 1 Ⓐ* 28

㉒* 1 ㉓* 1

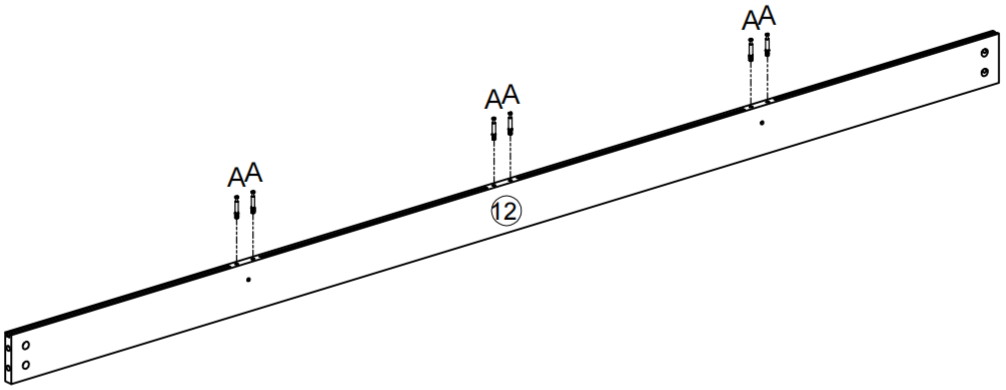

x3

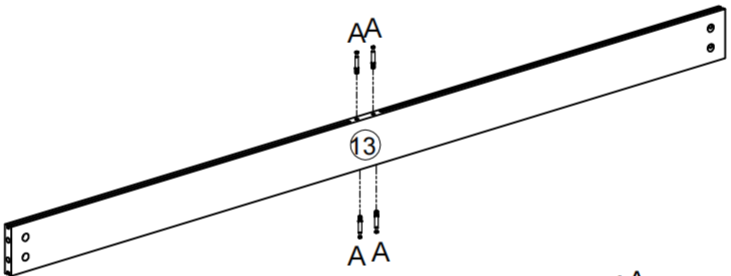

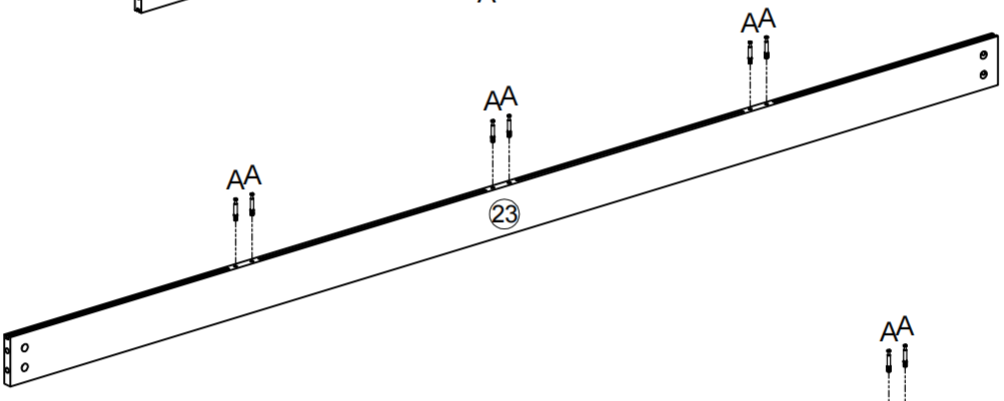

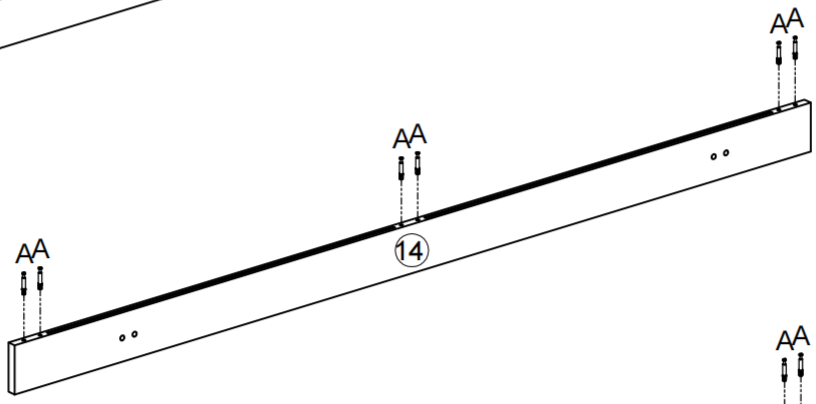

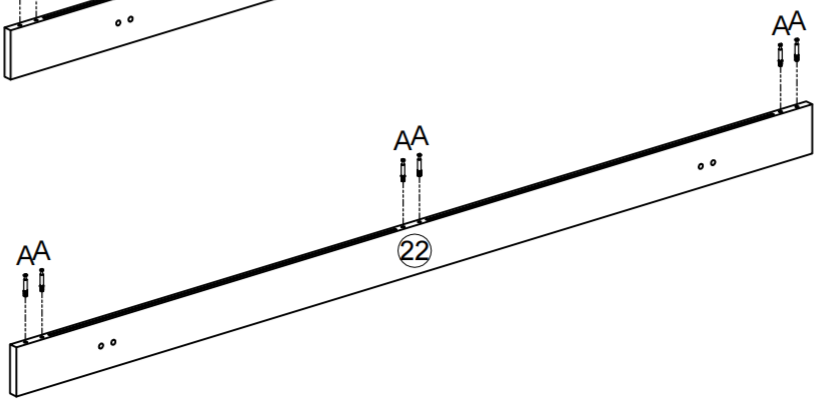

STEP10

⑯* 4 ⑮* 4 Ⓑ* 12

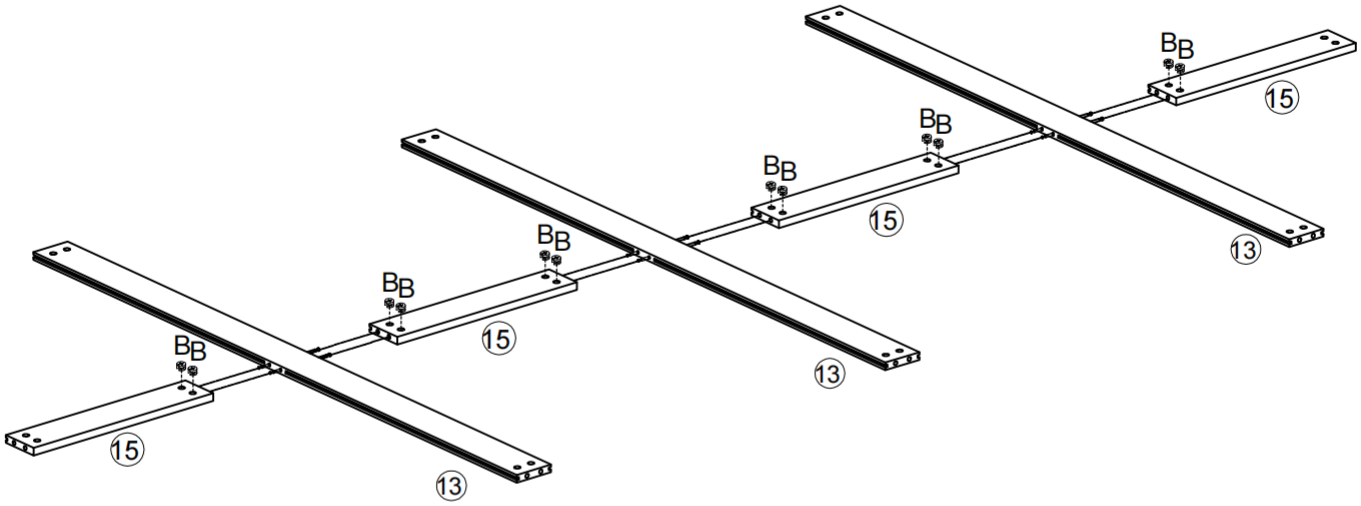

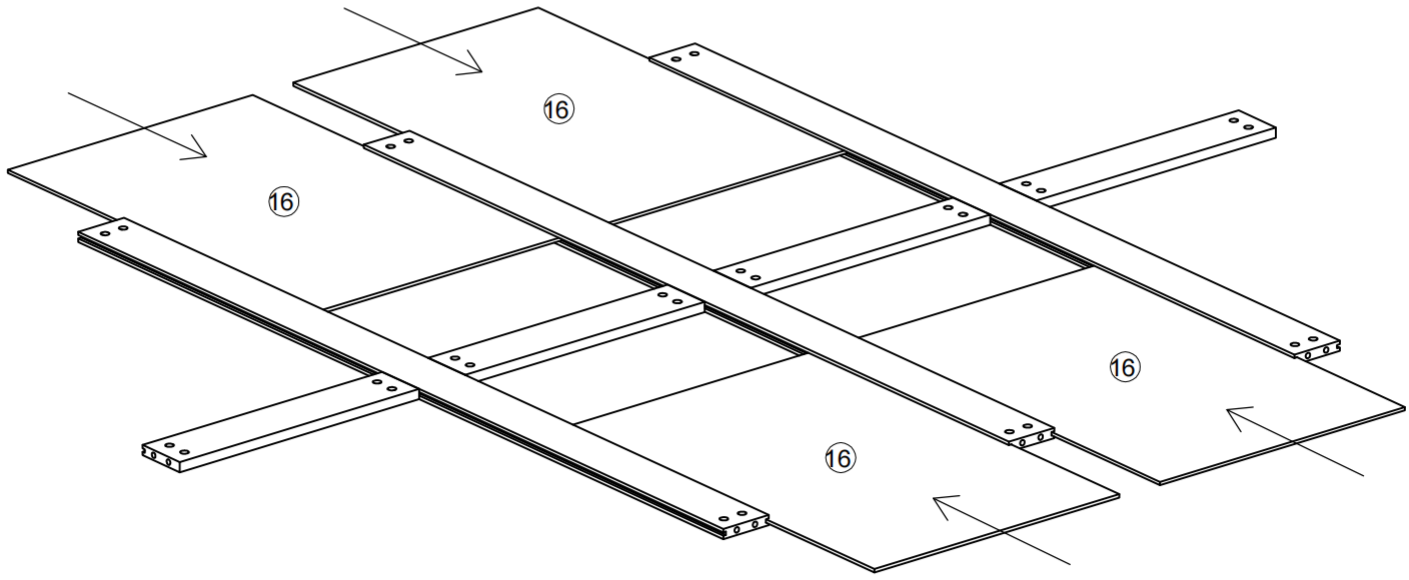

STEP11

⑫*1 ㉓*1 ⑯*4 Ⓑ*12

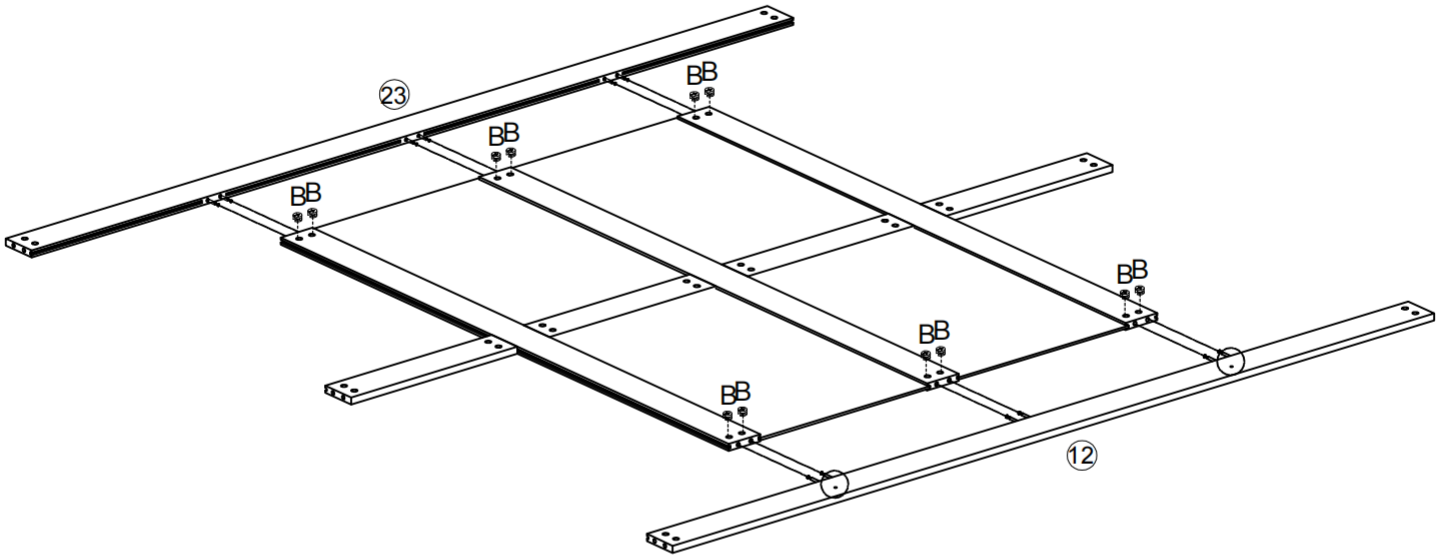

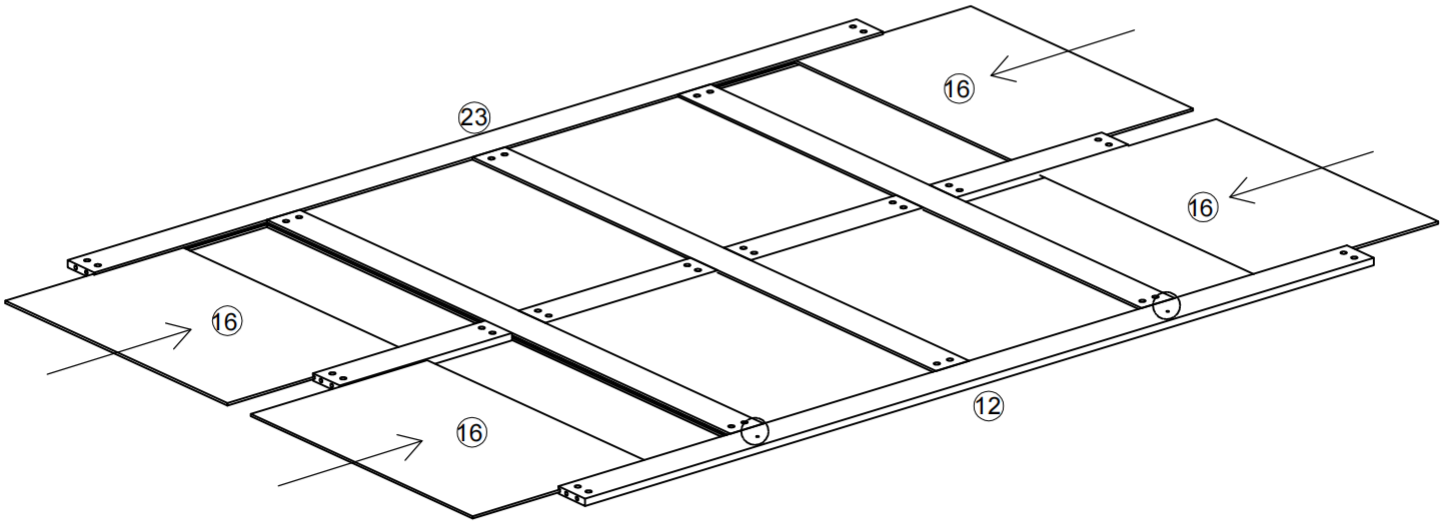

STEP12

⑭*1 ㉒*1 ⑯*4 Ⓑ*12

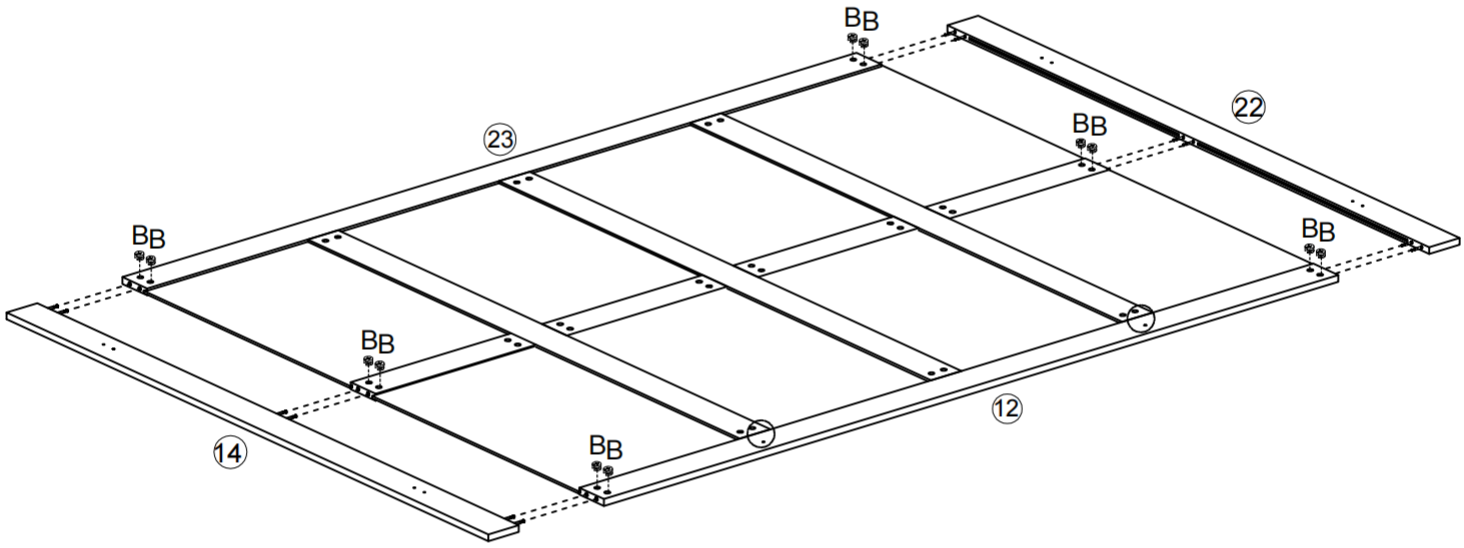

STEP13

39*1 40*1 41*1 42*2 60*16 61*4

73*1 74*1

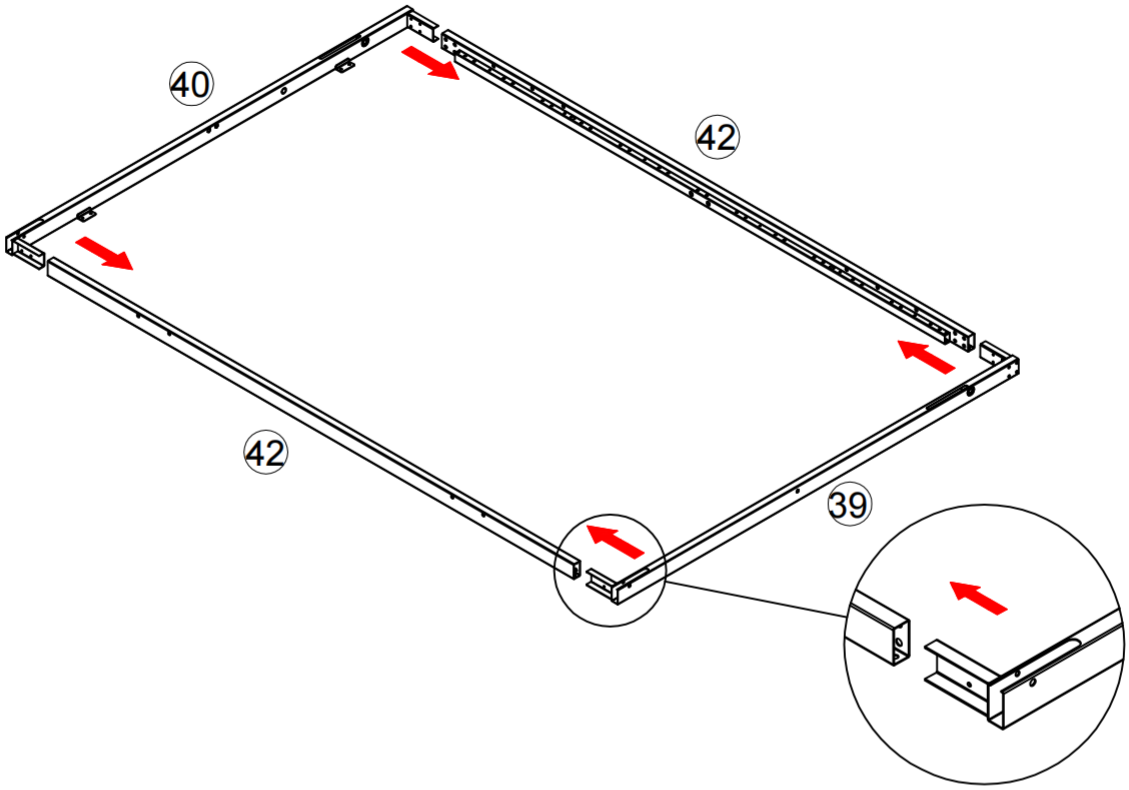

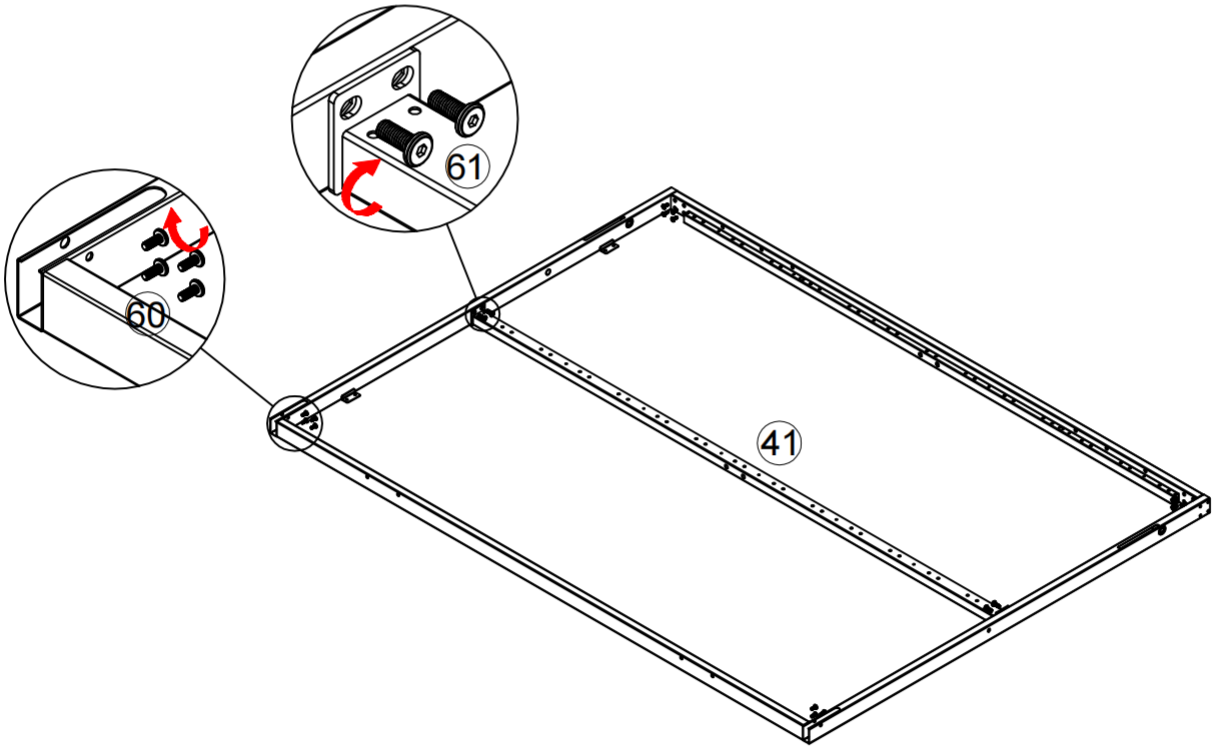

To prevent incorrect installation, please strictly install Panel 41# in the direction shown in the diagram.

STEP14

44* 2 45* 2 50* 2

59* 8 60* 4 61* 8 62* 4

73* 1 74* 1

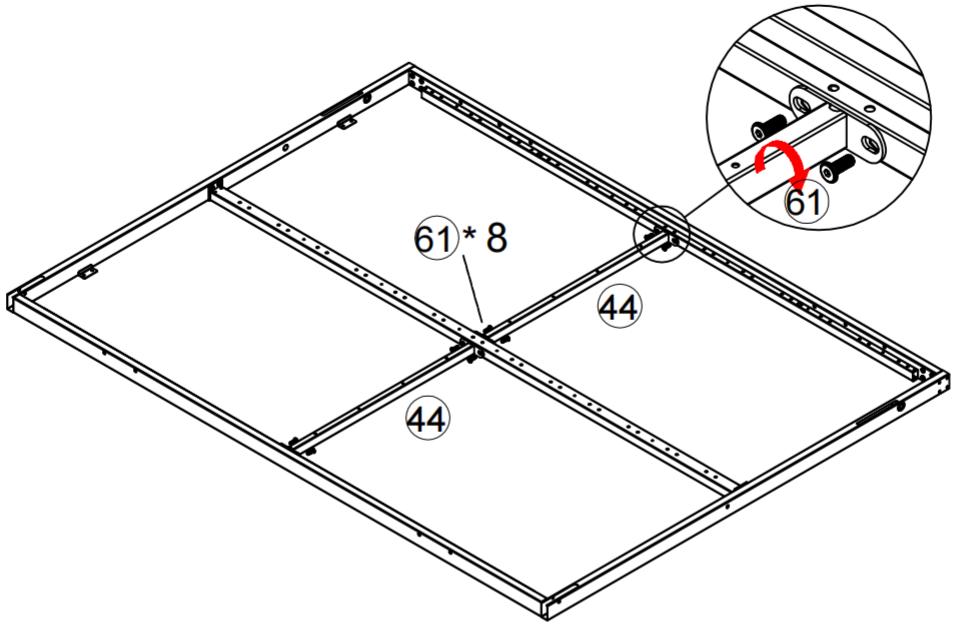

WARNING

Incorrect assembly of Part 45 will inevitably cause damage to the product during use. Please carefully check whether their installation position and direction are consistent with the diagram.

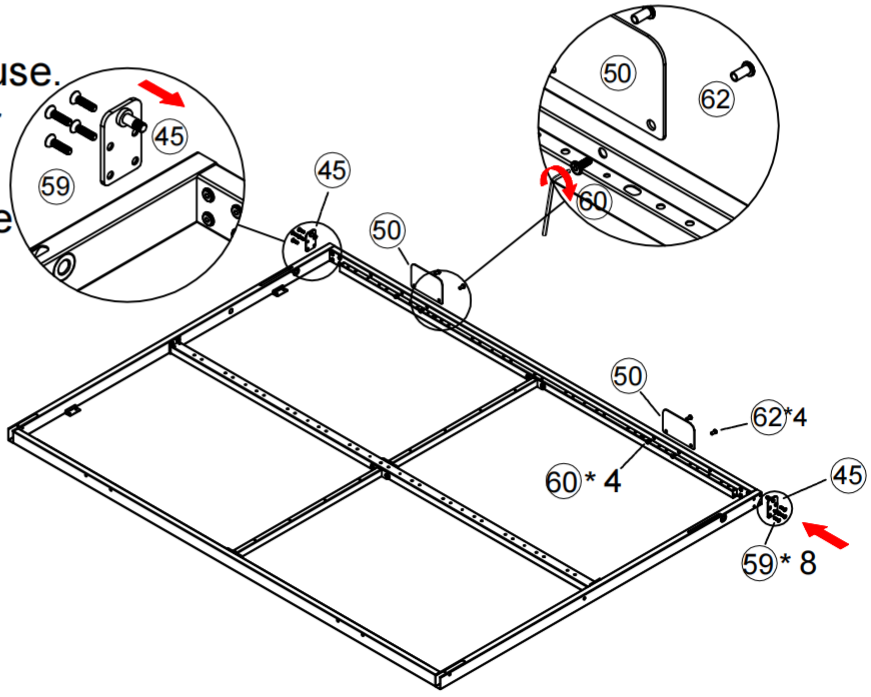

STEP15

77 * 8 70 * 34



Tools Required

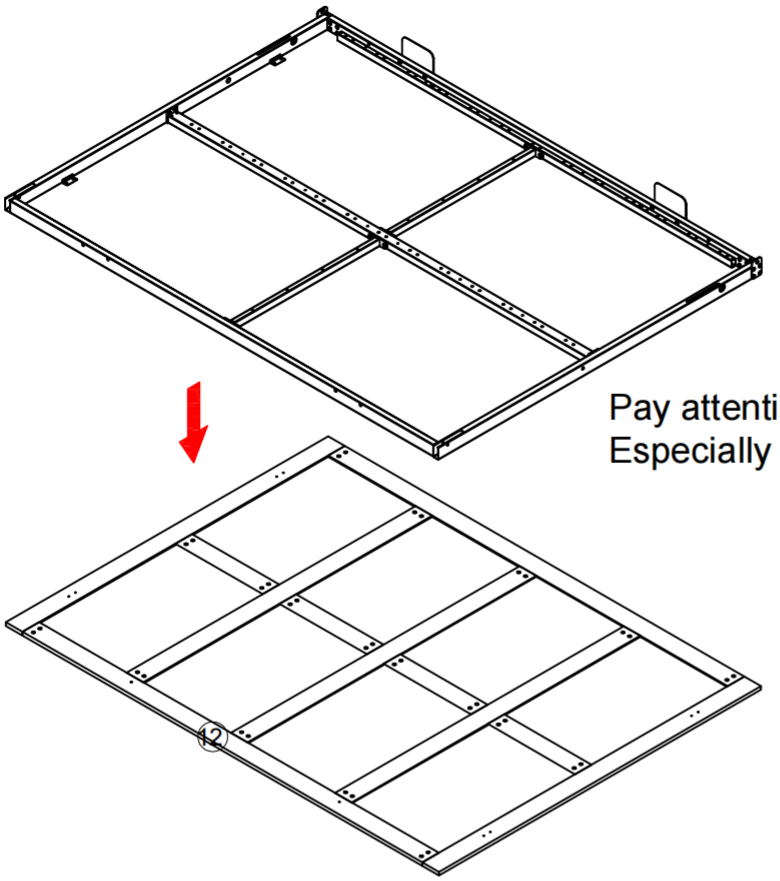

Pay attention to the installation direction.
Especially 12# has two guide holes to isntall

Pay attention to the installation direction.
Especially 12# has two guide holes to isntall

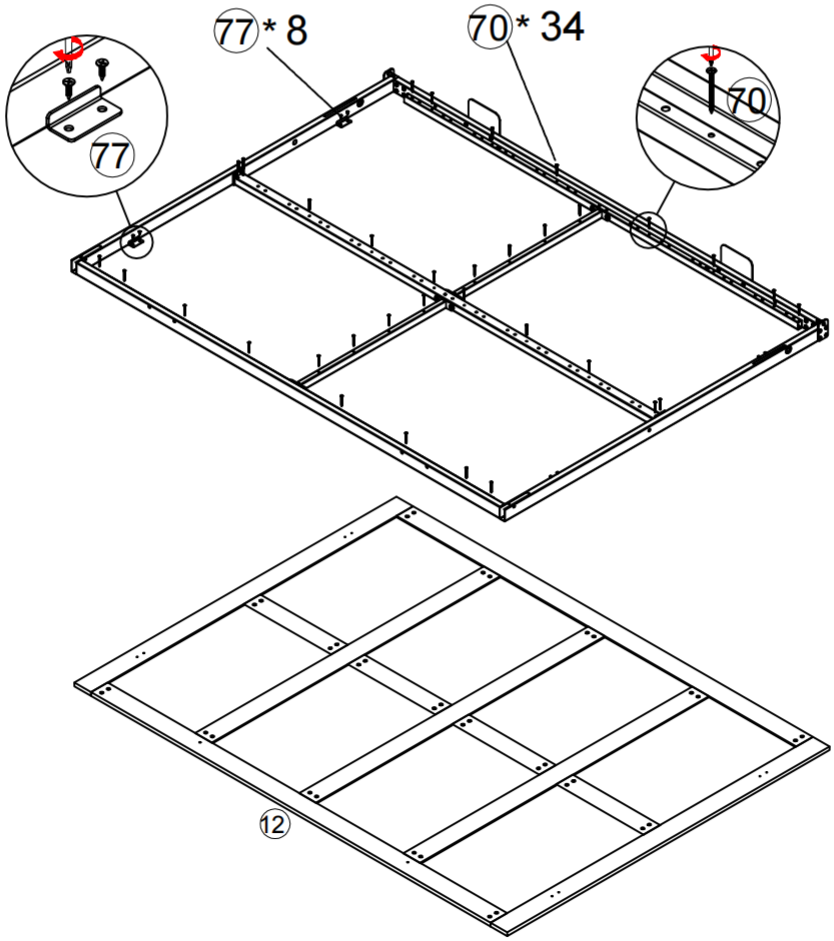

STEP16

48 * 1 49 * 1 63 * 2 65 * 2

73 * 1

Tools Required

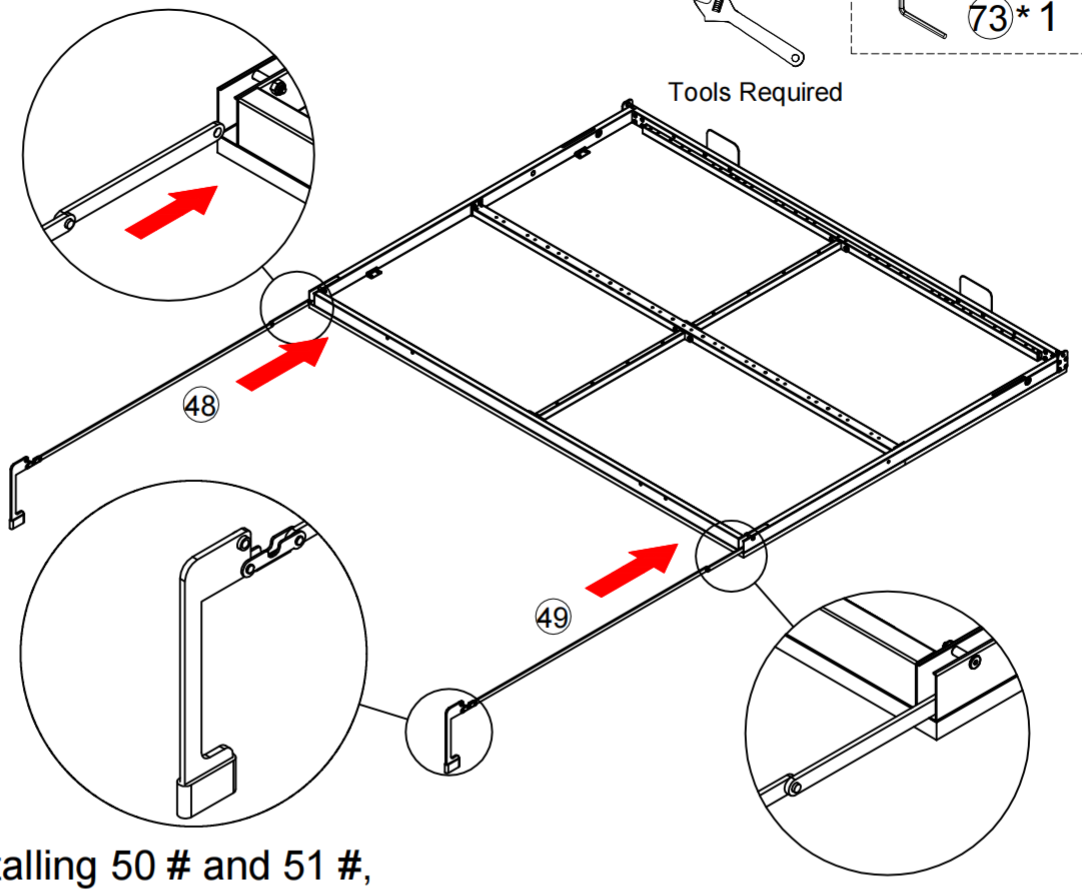

When installing 50 # and 51 #,
the foot swing arm should face downwards
and the small swing arm should be on the outer side.
50# and 51# can not be exchanged!!

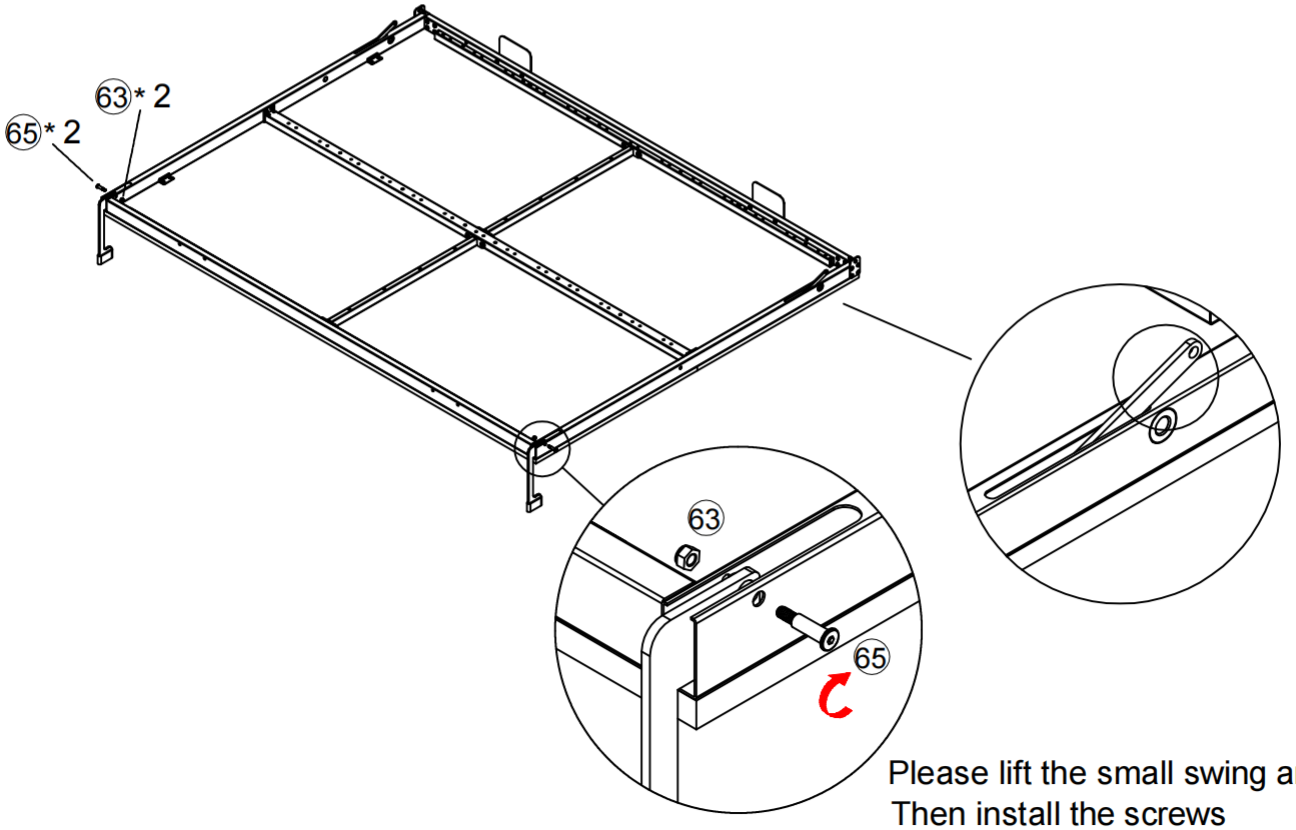

Please lift the small swing arm here
Then install the screws

STEP17

46*1 47*1 68*26



Tools Required

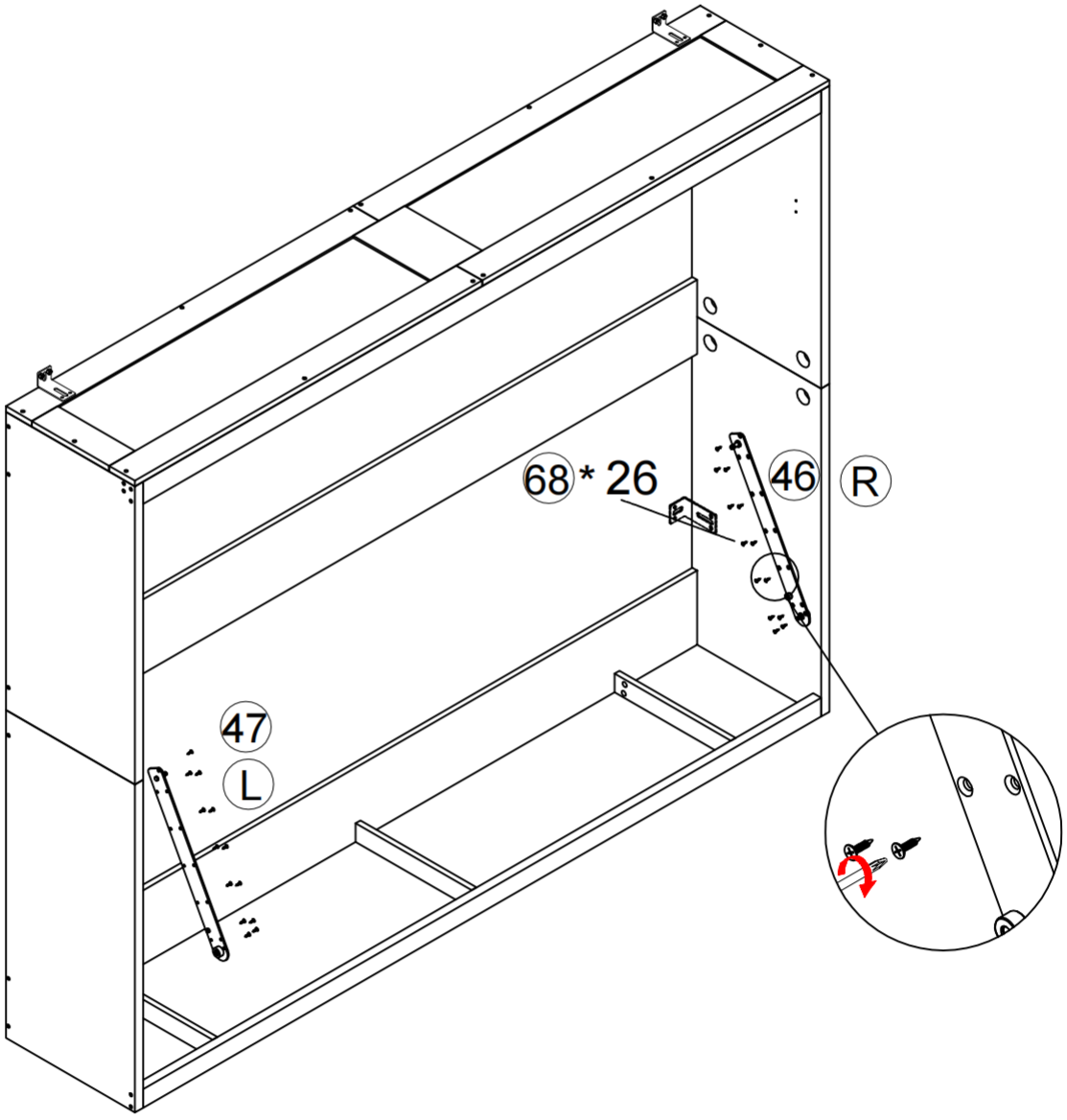

STEP18

56 * 2 57 * 2 58 * 2

E * 2 72 * 1 75 * 1

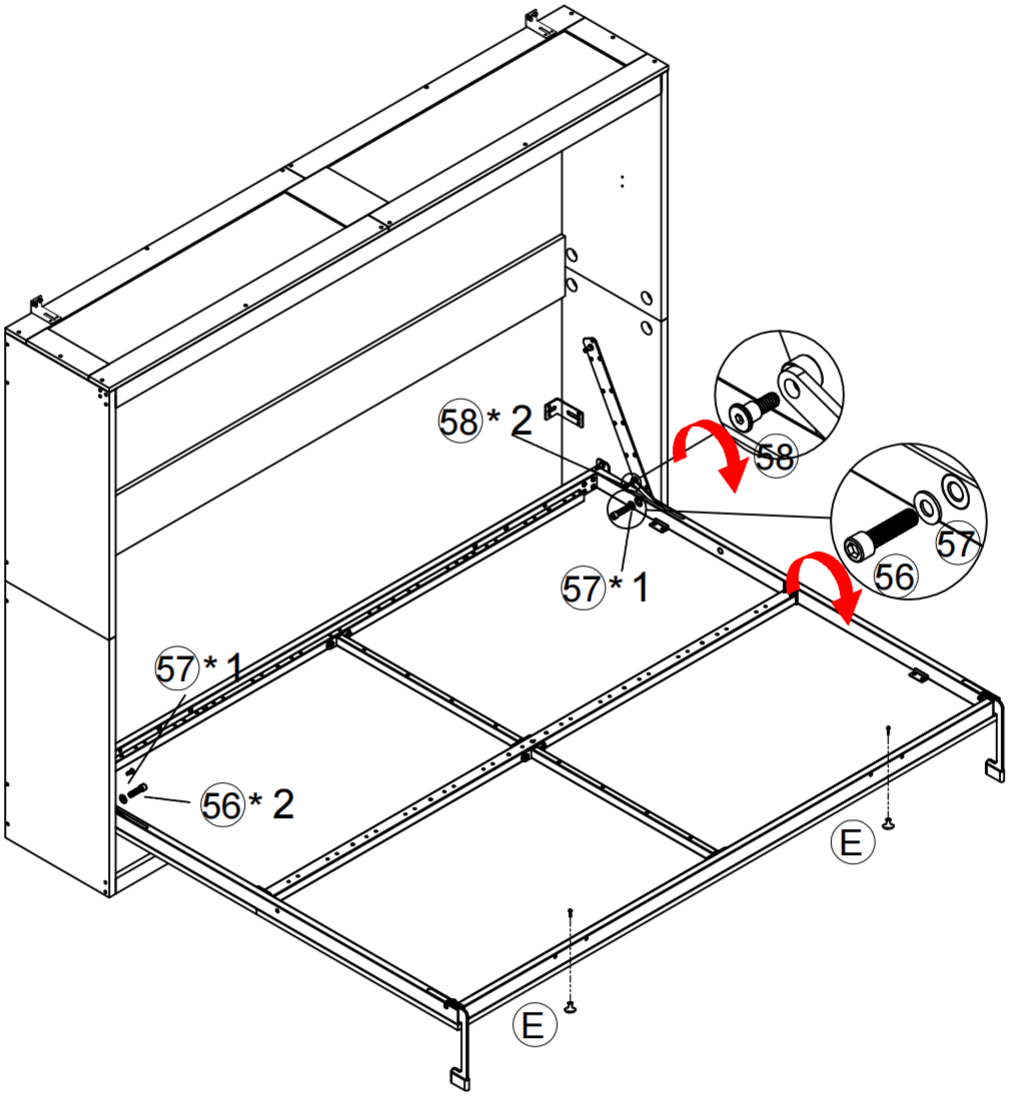

STEP19

55* 2 64* 4

Tools Required

WARNING

DO NOT remove the iron straps compressing the hydraulic rods (Part 55) until you have fixed the rods on both sides of the cabinet interior.

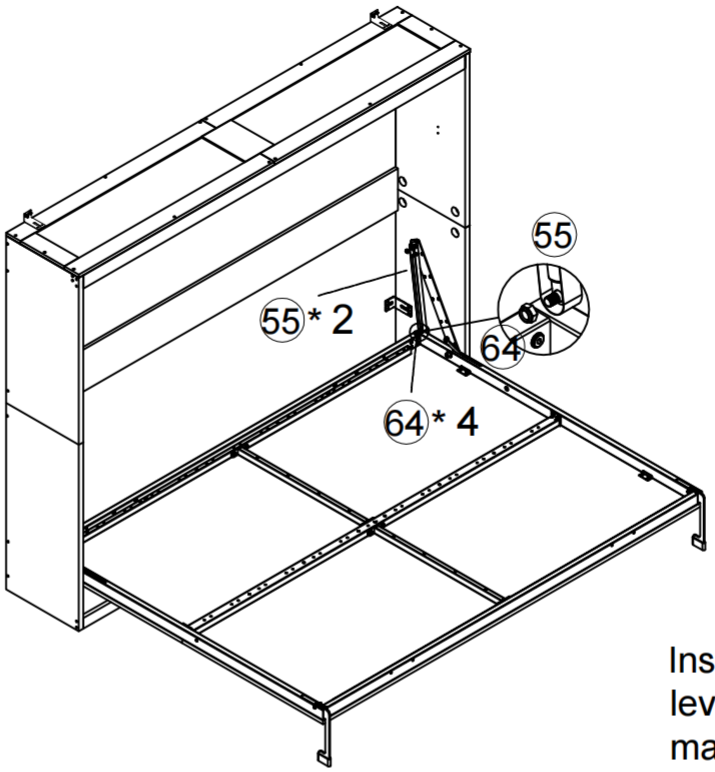

This end up

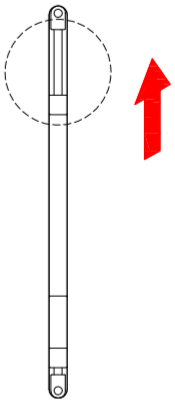

Install the hydraulic lever with the marked area facing upwards.

Swing the bed frame up and down, install 55# onto the bolts of 45# to get the right postion, then lock 64# nuts.

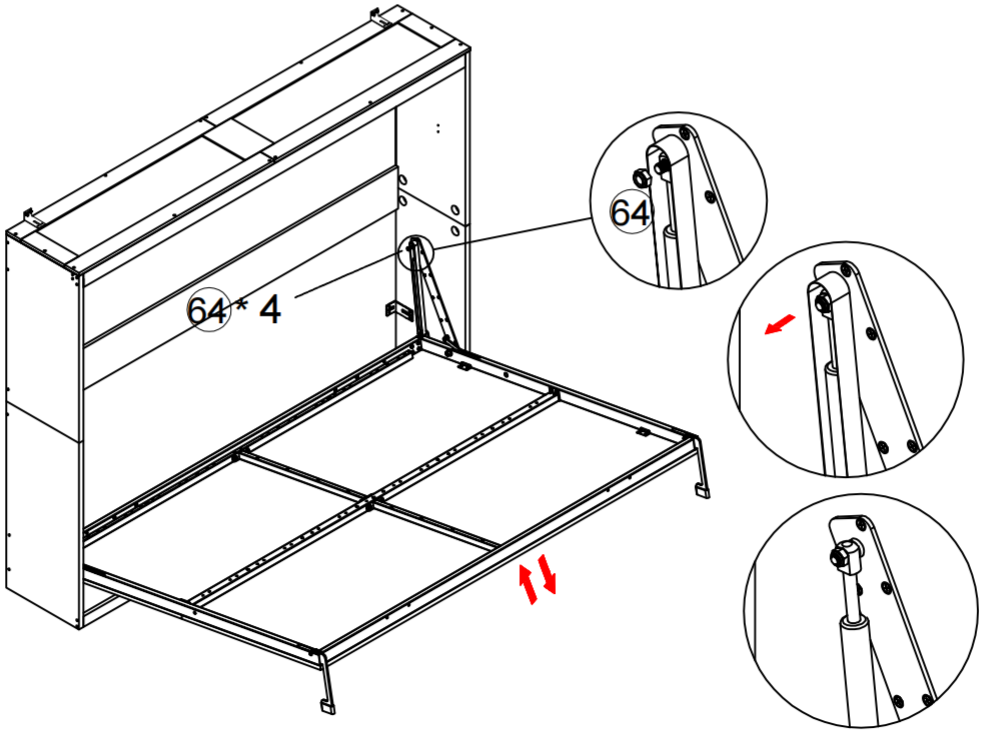

Press down the bed frame appropriately and remove the iron straps of 58#(recommend to wear gloves).

STEP20

51 * 13　52 * 26　53 * 26

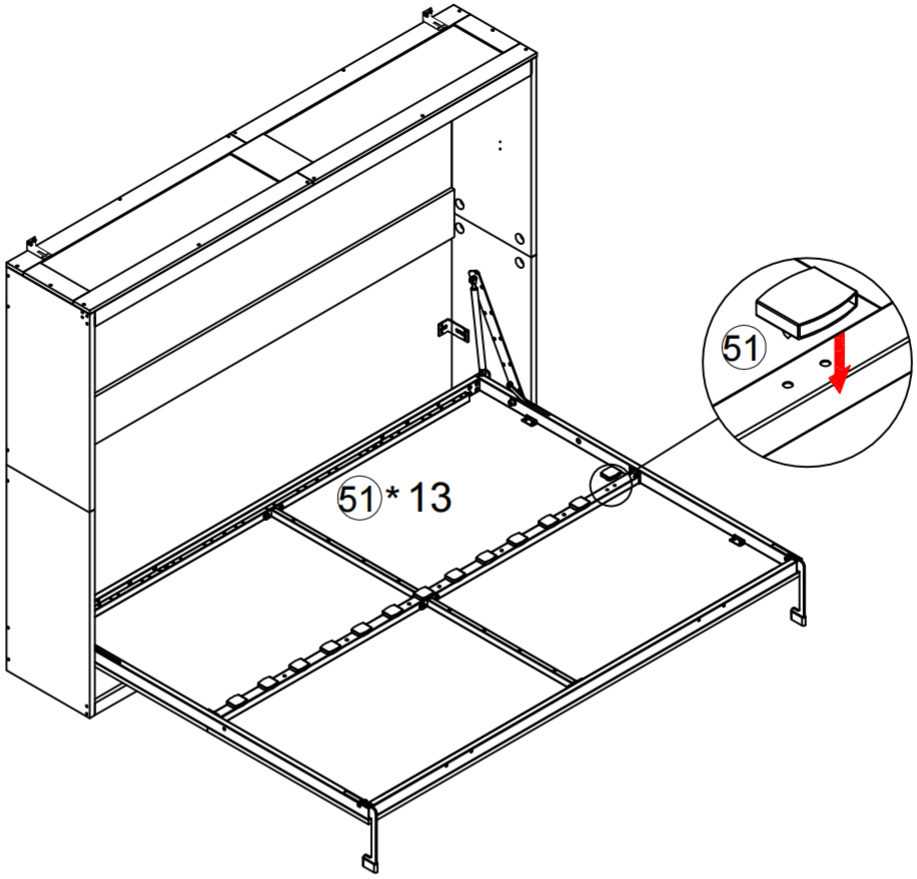

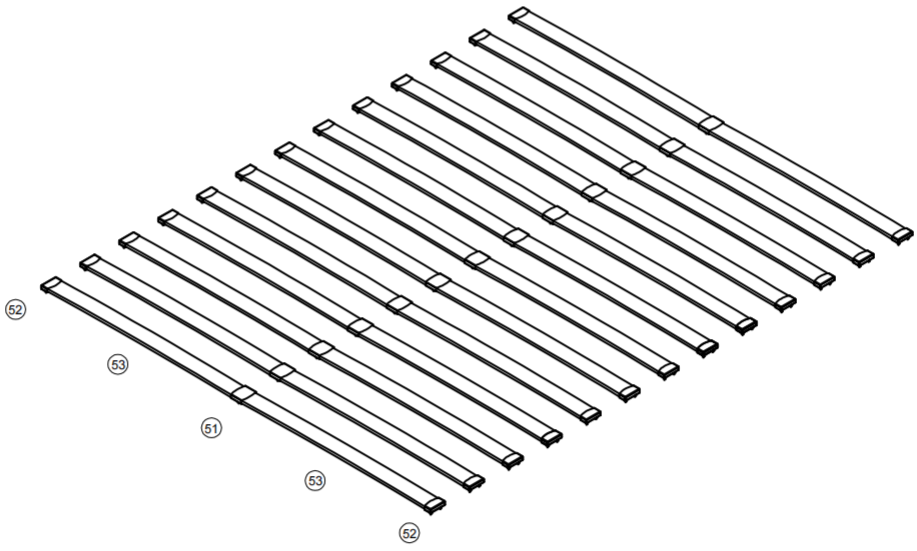

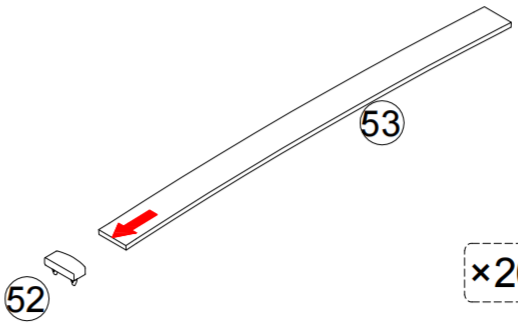

×26

STEP21

54 * 2 67 * 2 69 * 10



Tools Required

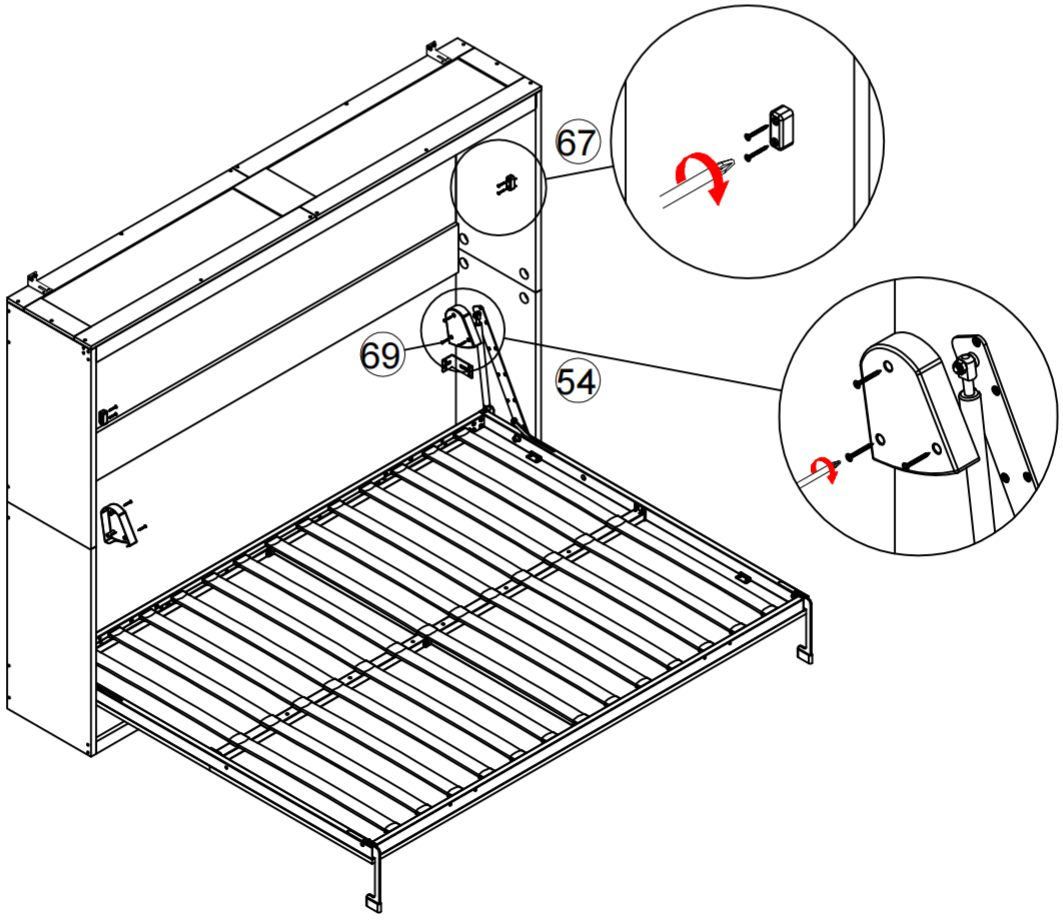

STEP22

76 * 2 H1 * 1

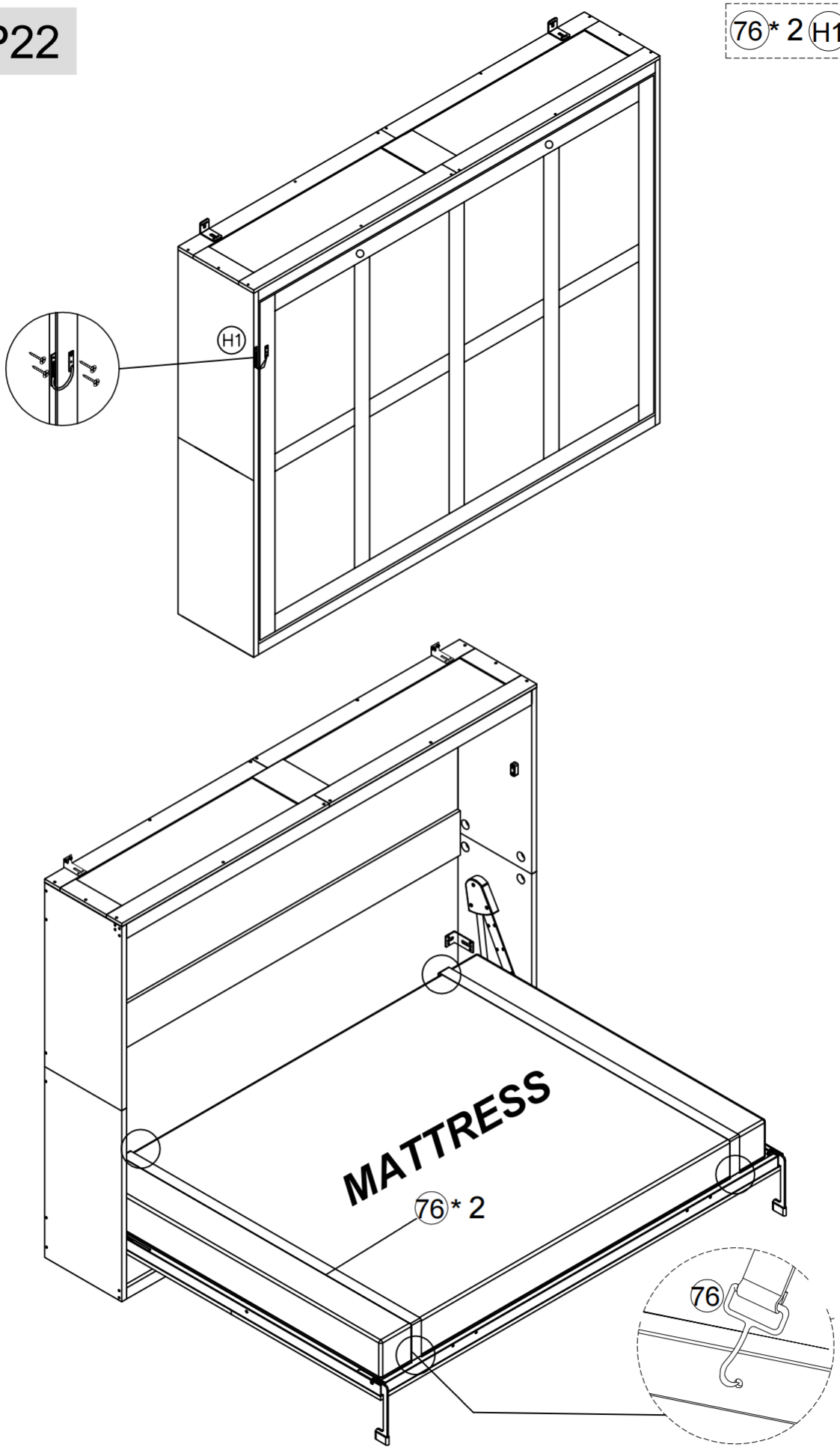

Final Assembly!

Assembly Instruction

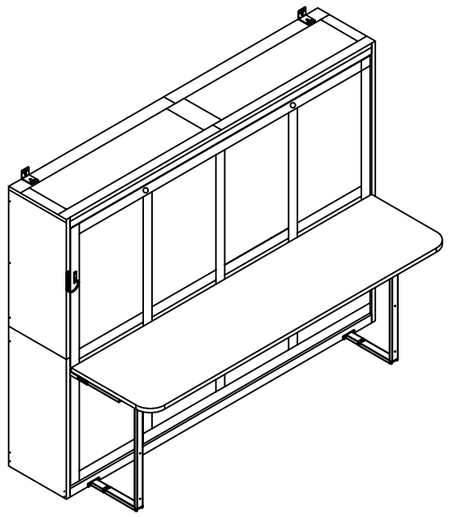

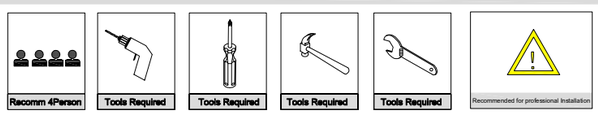

All rights reserved.

parts

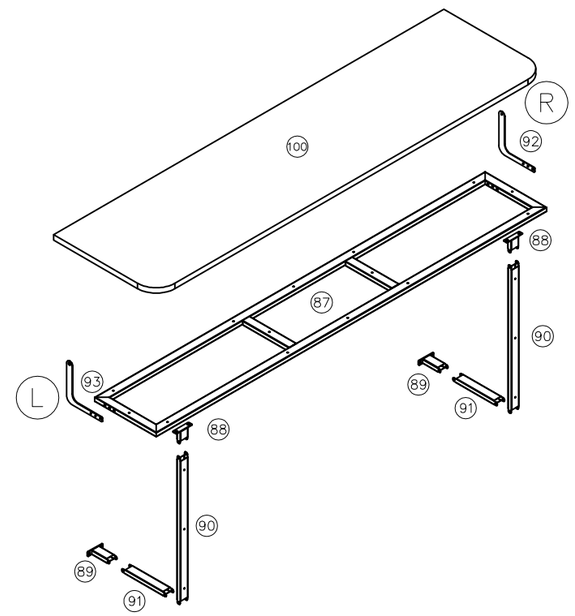

WARNING:
To avoid causing unnecessary troubles,
Please check whether the components with corresponding numbers are installed correctly according to the diagram.

All rights reserved.

Hareware

87 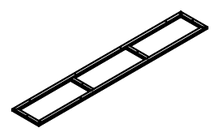 2090*330*20=1PC	88 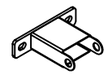 85*63*20=2PCS 89 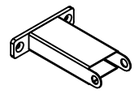 80*100*20=2PCS	90 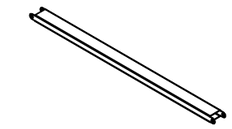 686*40*20=2PCS
91 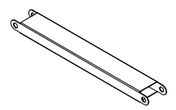 293*40*20=2PCS	92 R  190*194*4=1PC 93 L  190*194*4=1PC	94 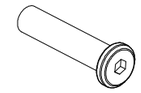 M6*40* ϕ8= 13PCS
95 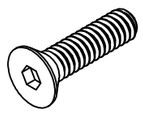 M6*20= 3PCS	96  M6*15= 17PCS	97  M4*20= 5PCS
98  M4*35= 15PCS	99  4mm= 1PCS	100 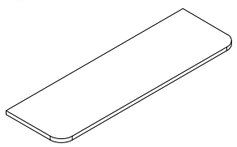 2090*390*22mm=1PC

All rights reserved.

1,

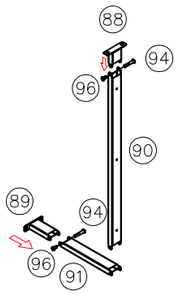

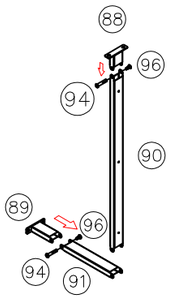

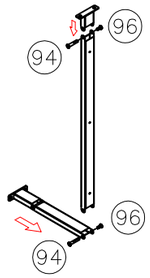

2,

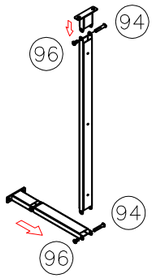

3,

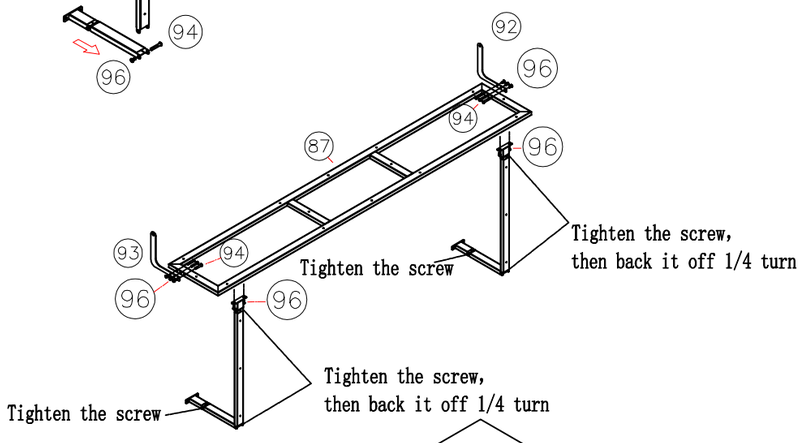

4,

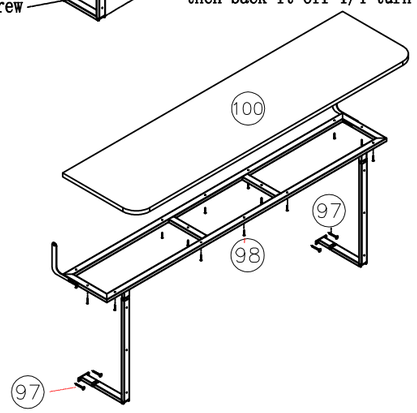

All rights reserved.

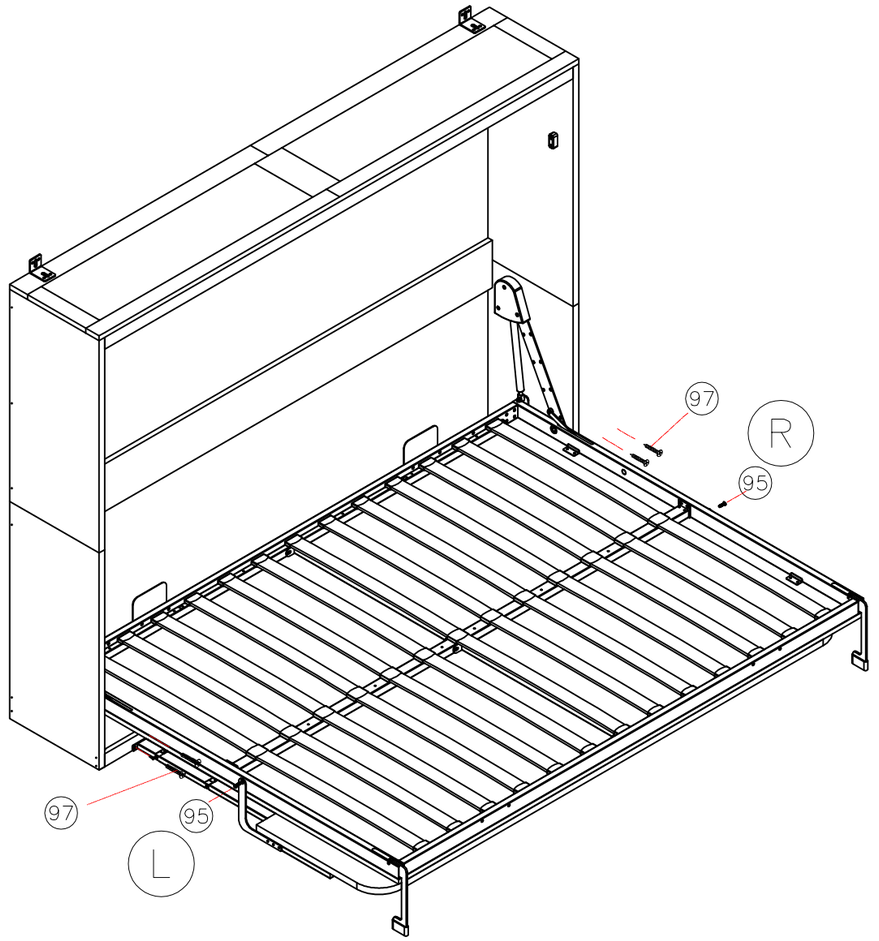

Secure the table frame to the bed,
and the installation is complete

All rights reserved.

Assembly Instruction

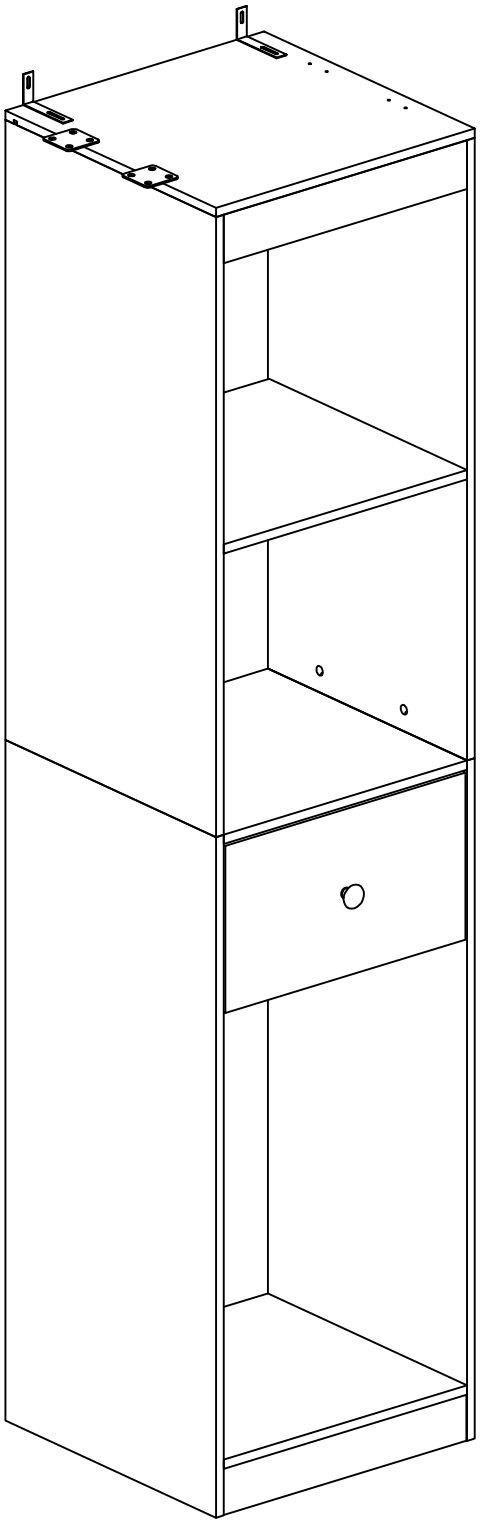

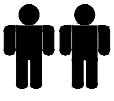

Recommended 2 Person

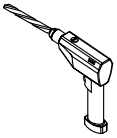

Tools Required



Tools Required



Tools Required

Recommended for professional installation

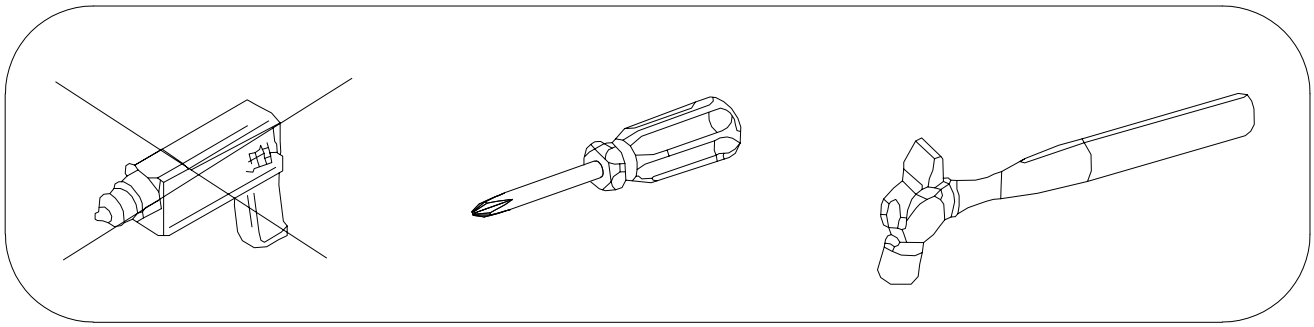

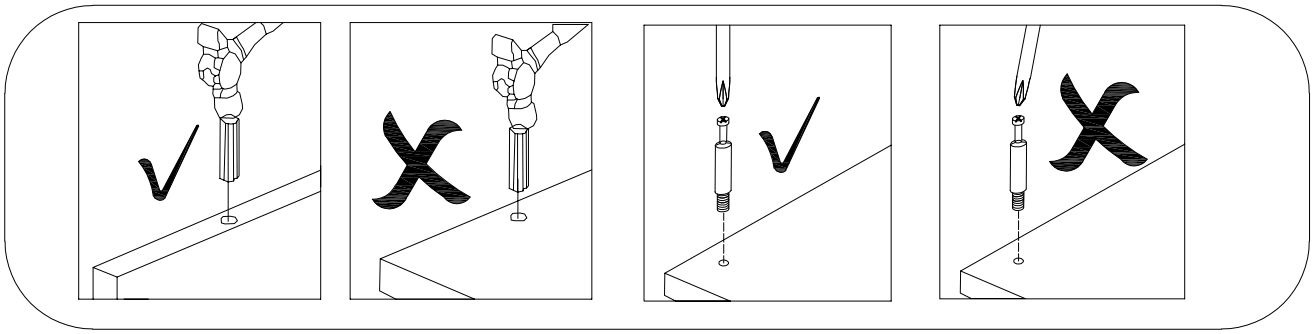

 M5.8*35 A*88	 ϕ11.5*9 B*88	 M6X30 C*48	 D*2
 ϕ4*16 E*2	 M4X30 F*8	 M4*12mm G*64	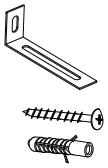 H*4
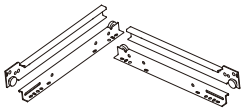 *2	 J*24	 K*4	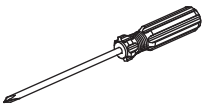 *1

Using Camlocks(Single head cam)

Step 1

Connect the male camlock as directed in the assembly instructions using a screwdriver.

1

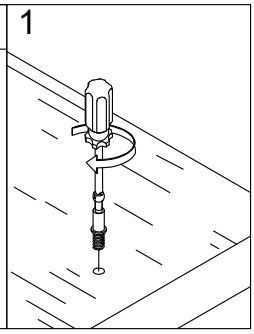

Step 2

Push the male camlock into the entry hole.

2

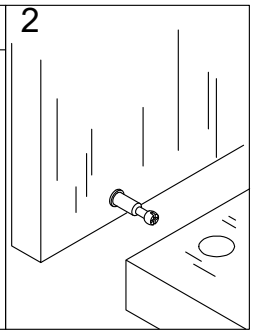

Step 3

Insert the female camlock as shown in the instruction.

Note: ensure that the arrow on the top of the camlock points towards the entry hole for the male camlock.

3

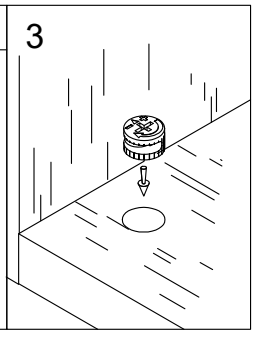

Step 4

Turn the female camlock 180 degrees clockwise with a screwdriver to complete the locking.

4

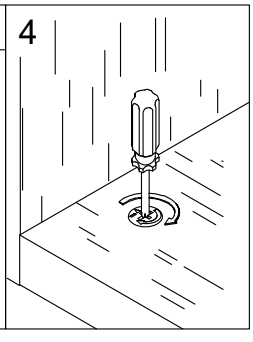

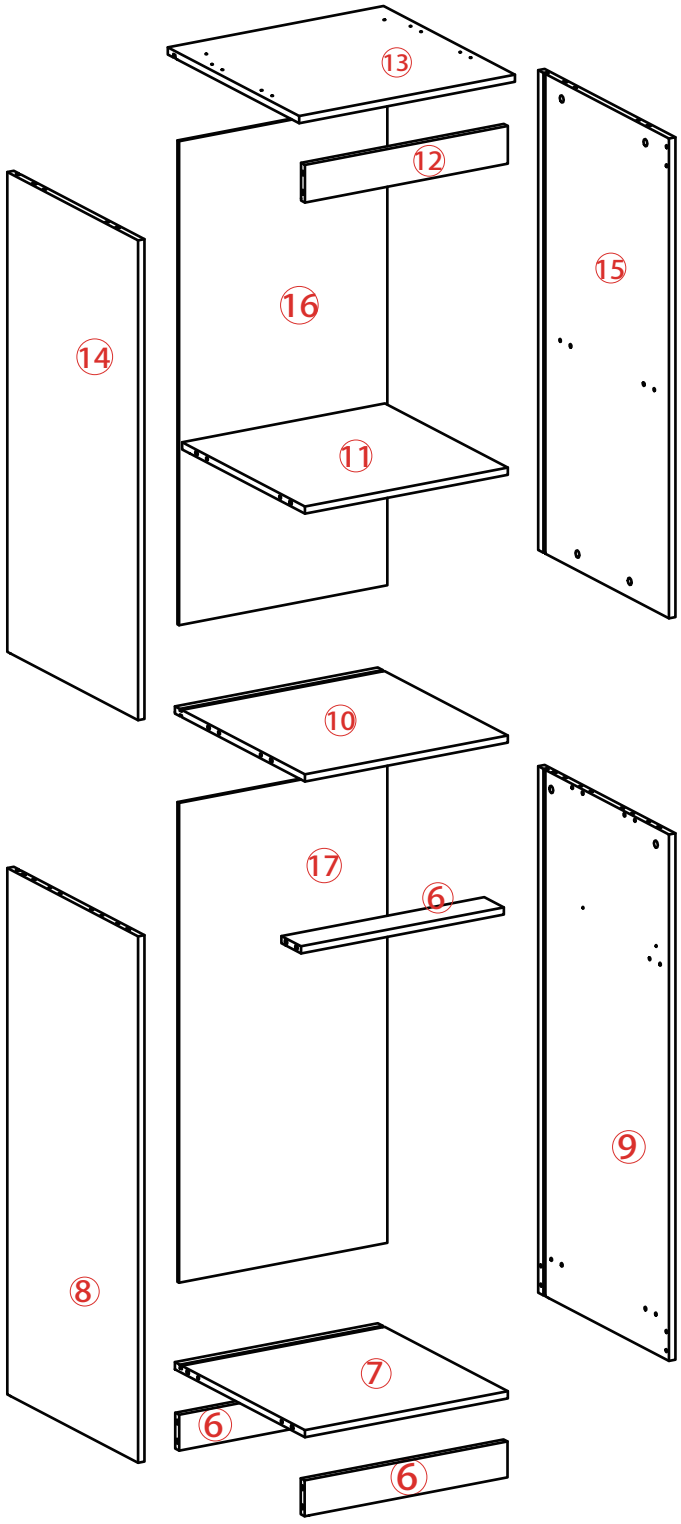
13
12
14
16
15
11
10
17
6
8
9
7
6
6

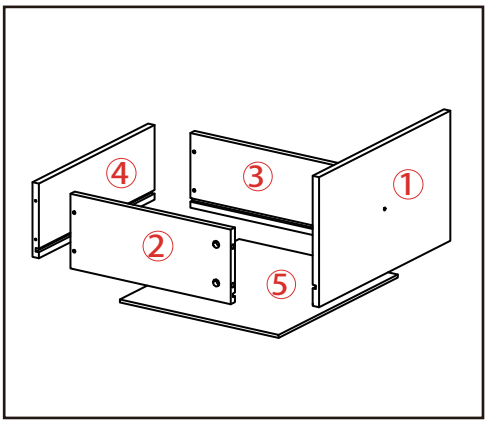
4
3
1
2
5

Step 1

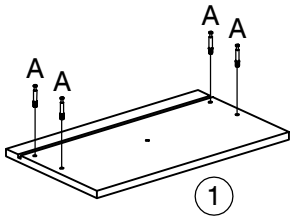

x2

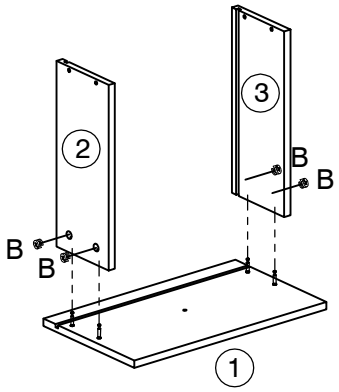

x2

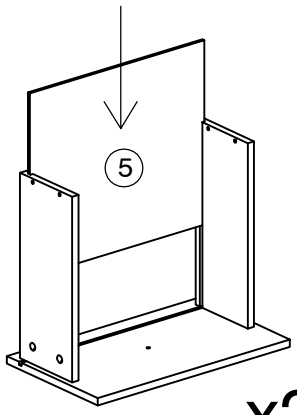

x2

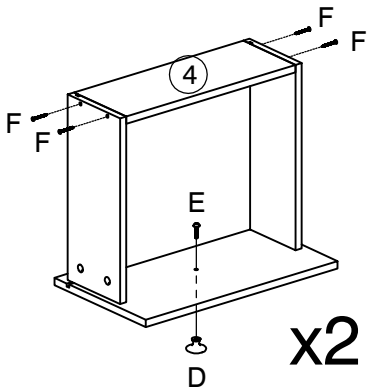

x2

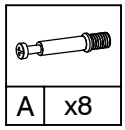

A x8

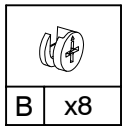

B x8

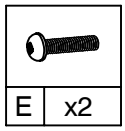

E x2

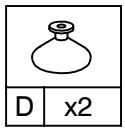

D x2

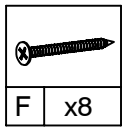

F x8

Step 2

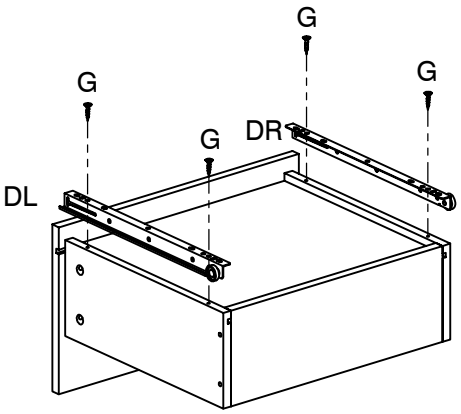

x2



DR x2

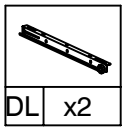

DL x2

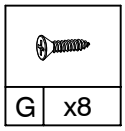

G x8

Step 3

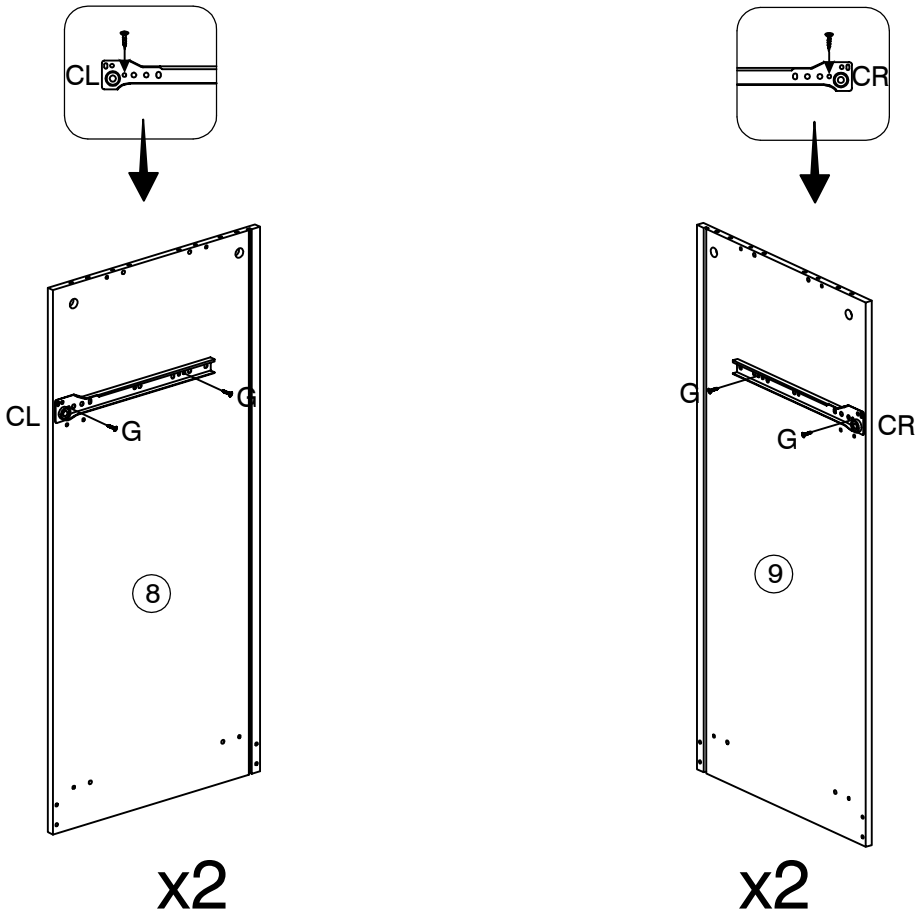
CL
CR
CL
G
G
G
G
CR
8
9
x2
x2

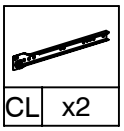
CL x2

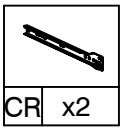
CR x2

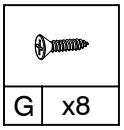
G x8

Step 4

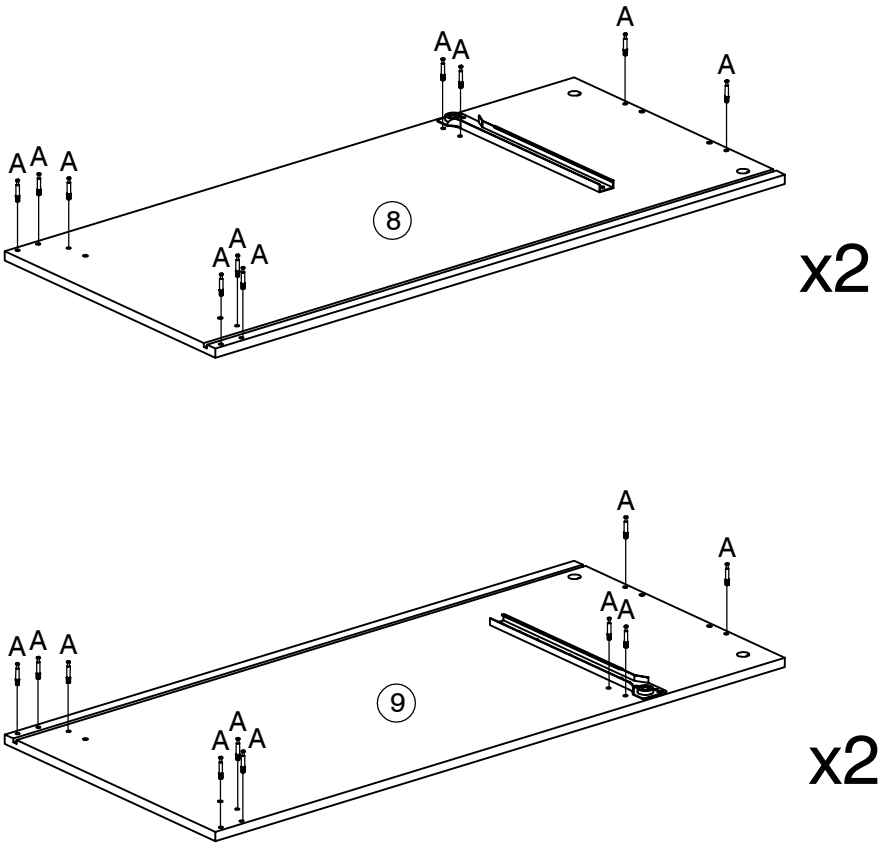
A
A
A
A
A
A
A
A
A
A
A
8
9
x2
x2

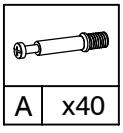
A x40

Step 5

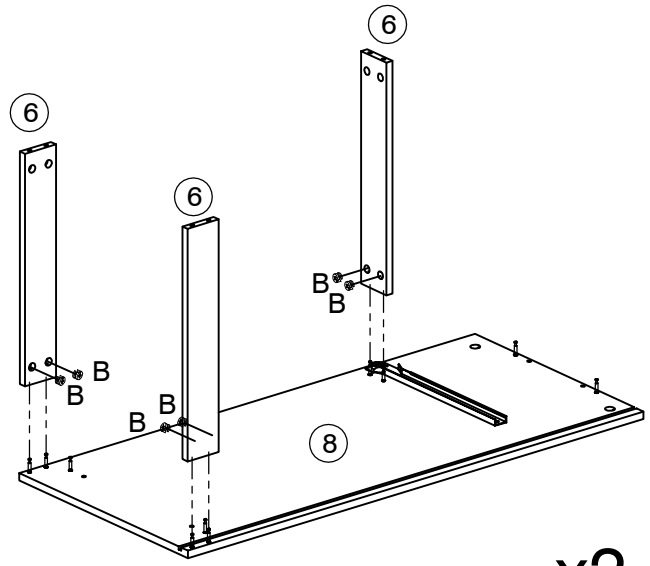

x2

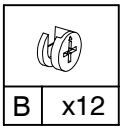

Step 6

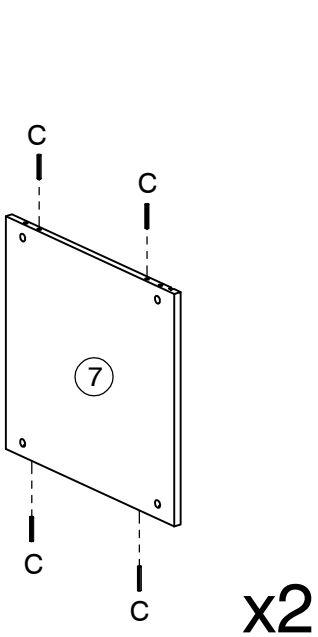

x2

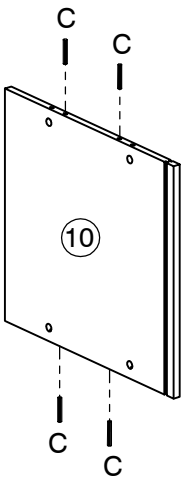

x2

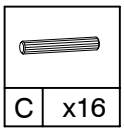

Step 7

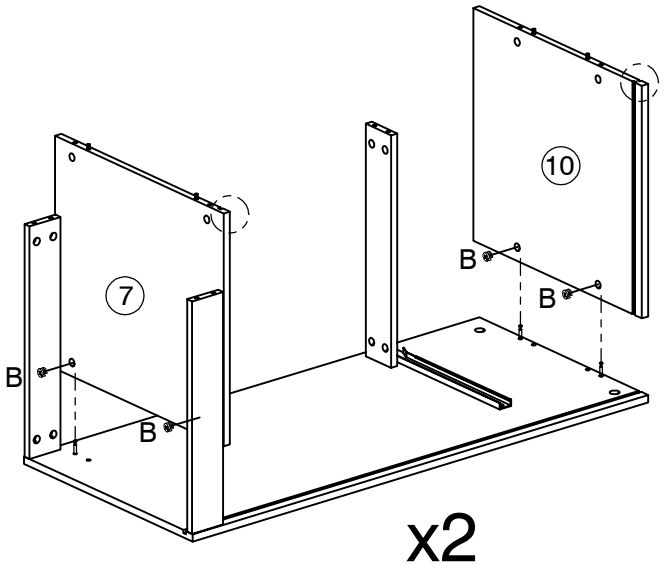

x2

B	x8

Step 8

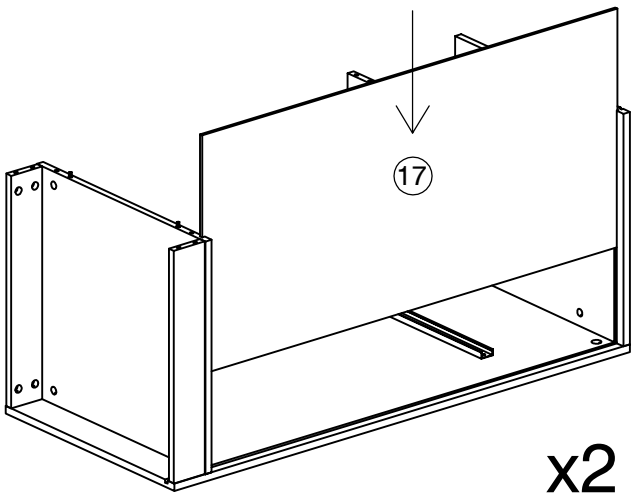

x2

Step 9

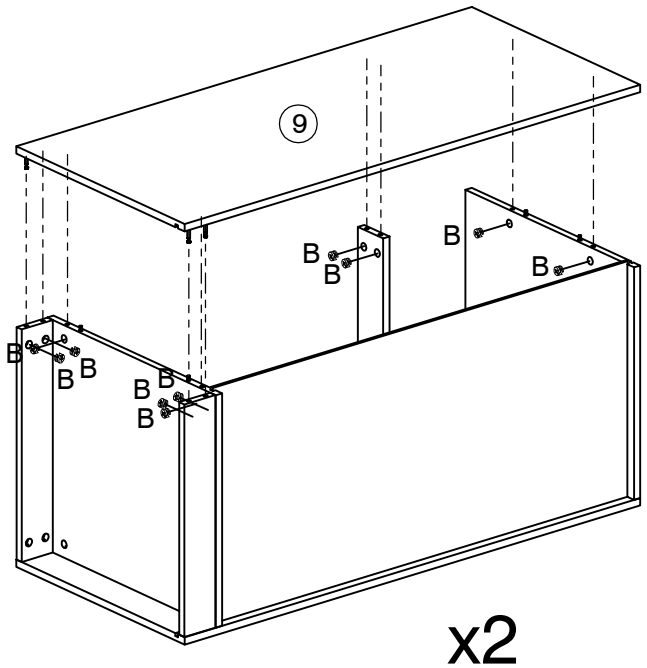

x2

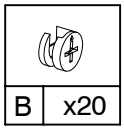

Step 10

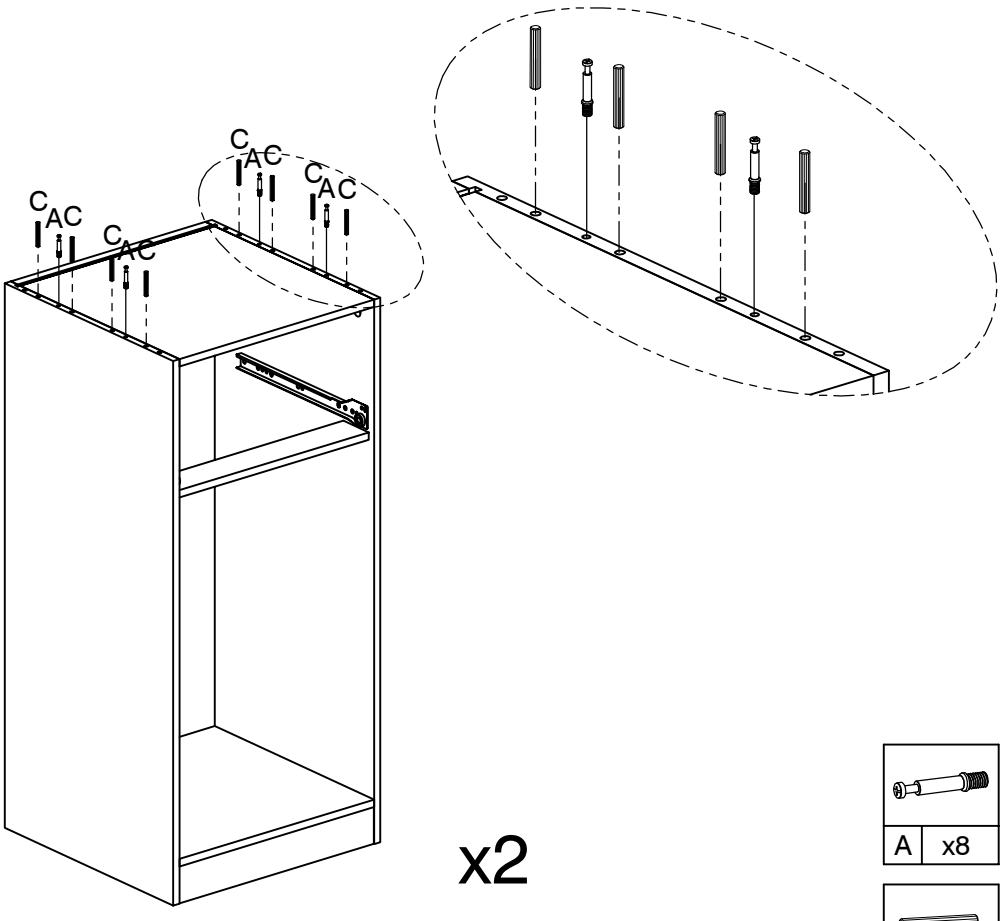

x2

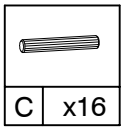

Step 11

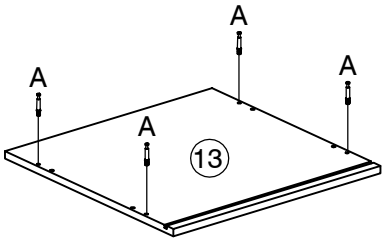

x2

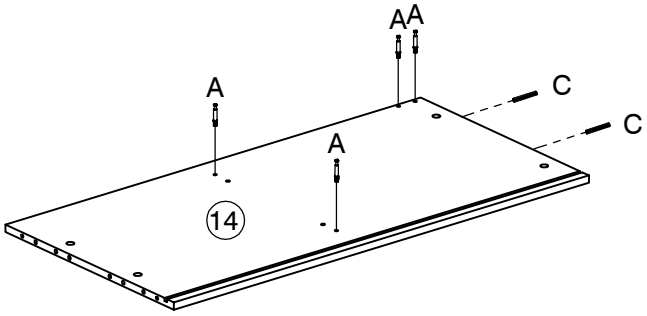

x2

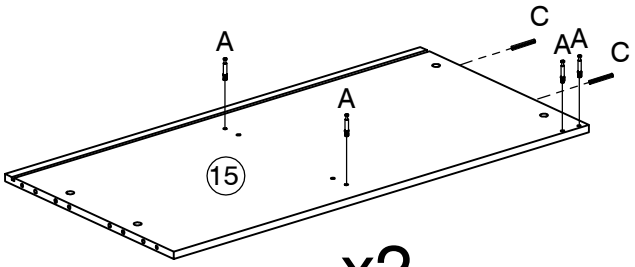

x2

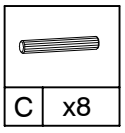

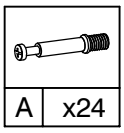

Step 12

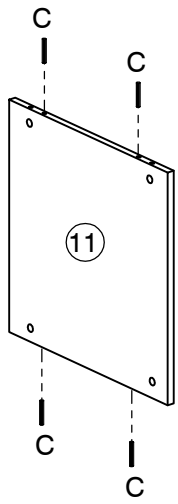

x2

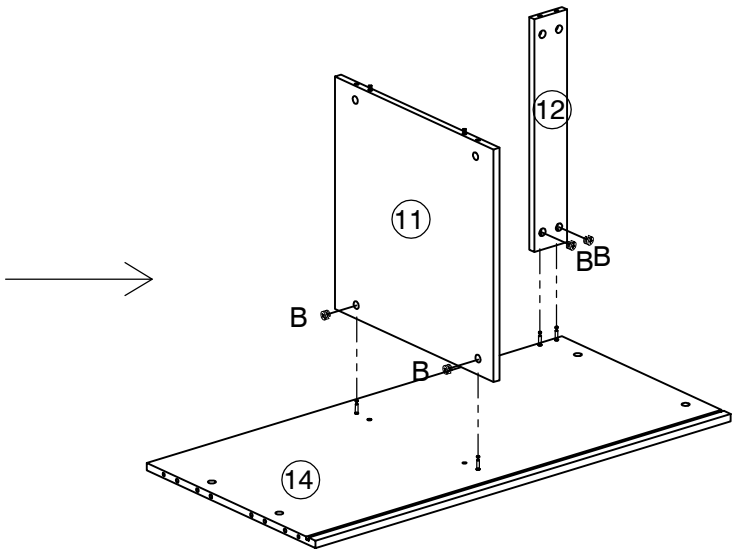

x2

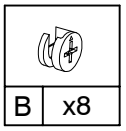

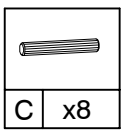

Step 13

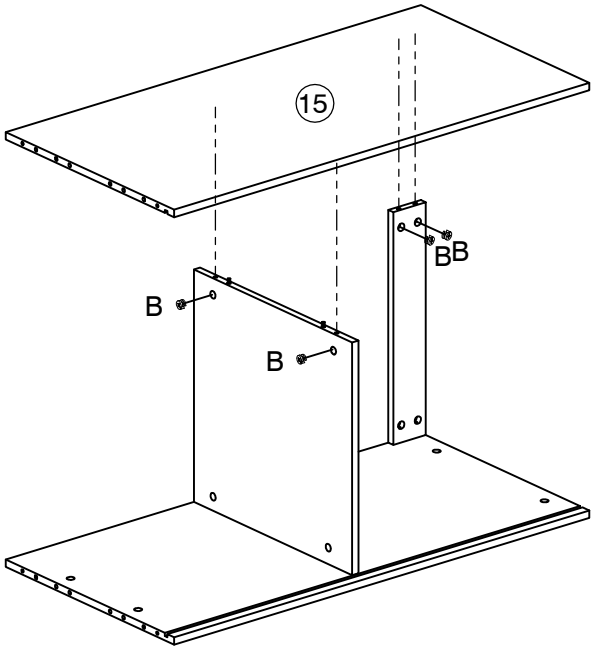

x2

B	x8

Step 14

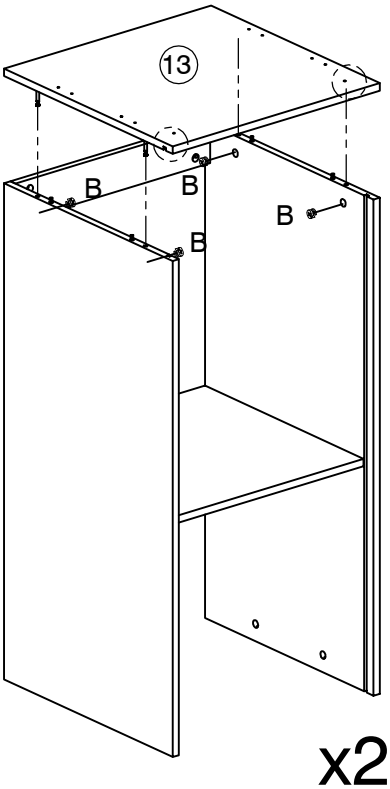

x2

B	x8

Step 15

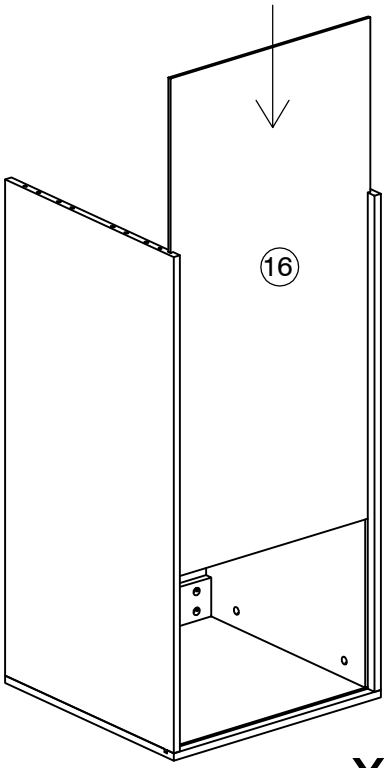

x2

Step 16

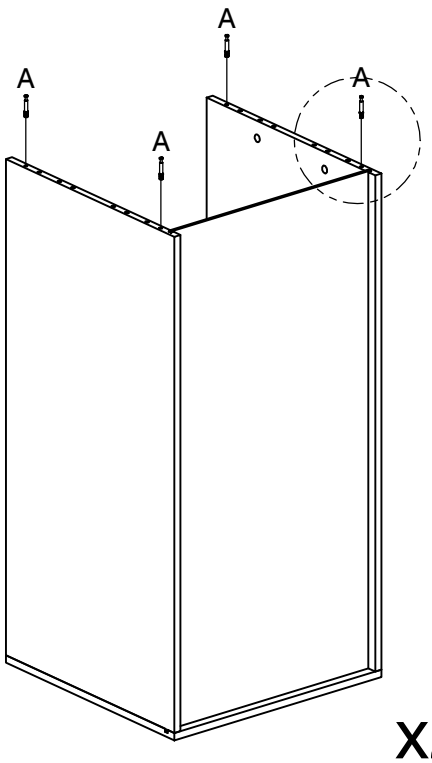

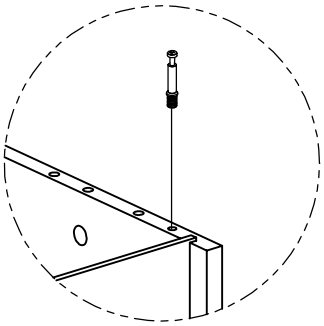

x2

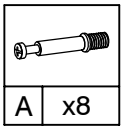

Step 17

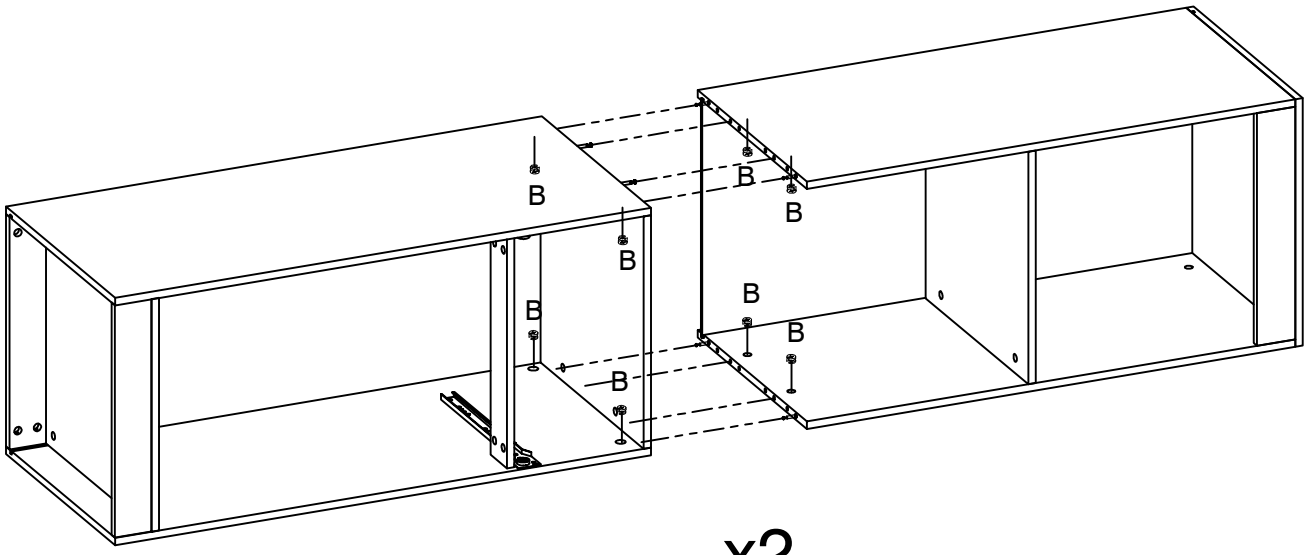

x2

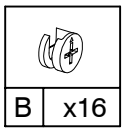

Step 18

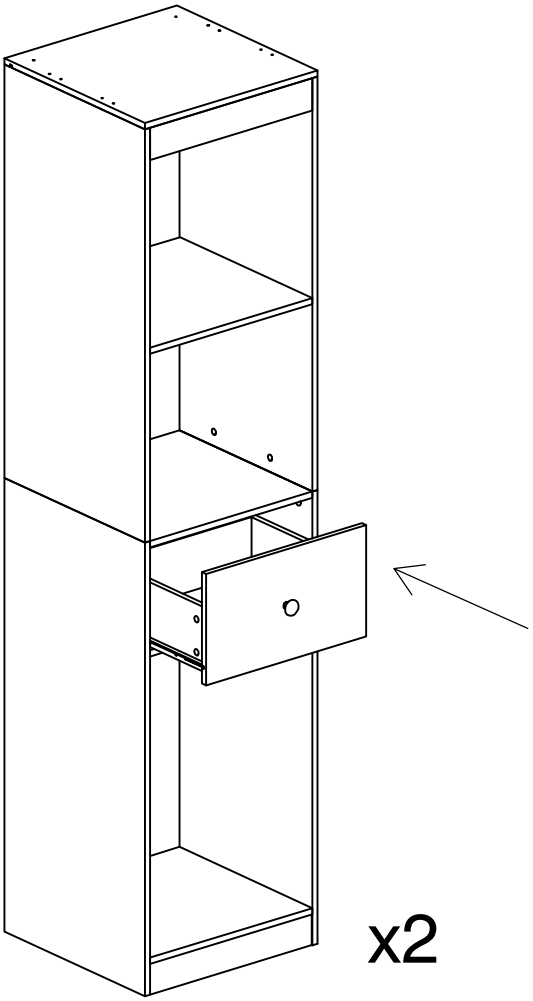

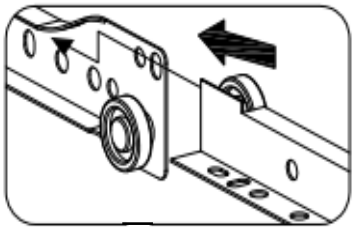

x2

Step 19

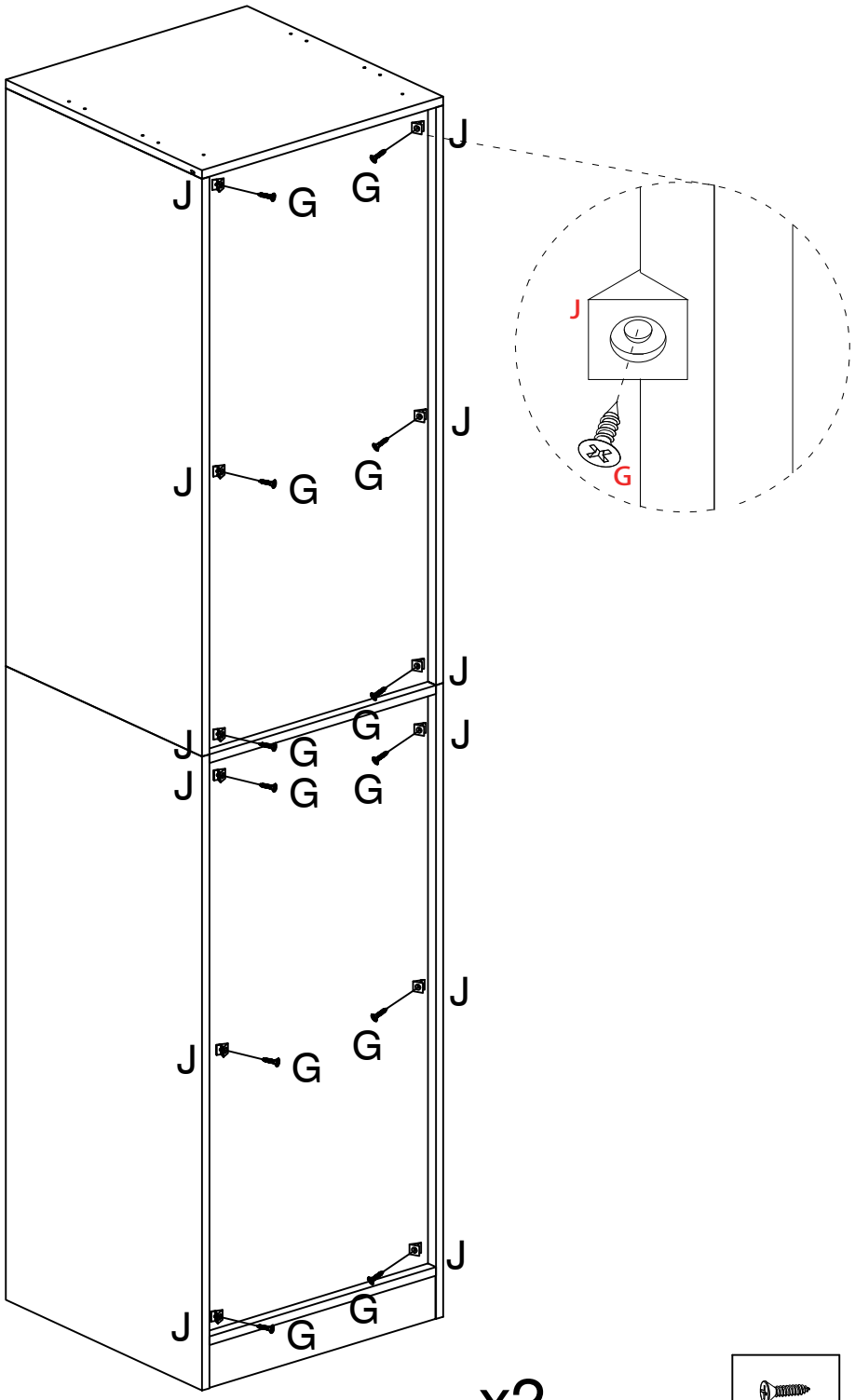
J
G
J
G
J
G

Step 20

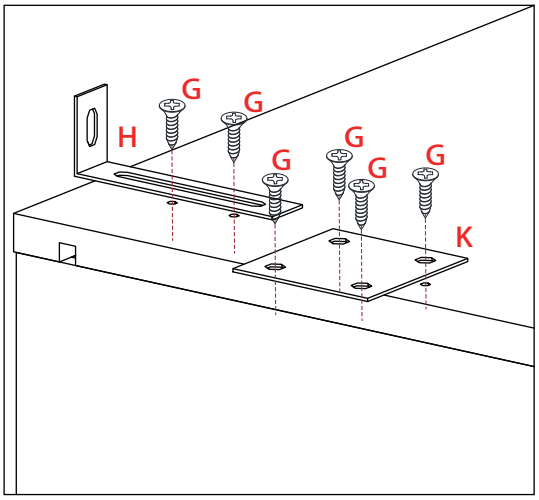

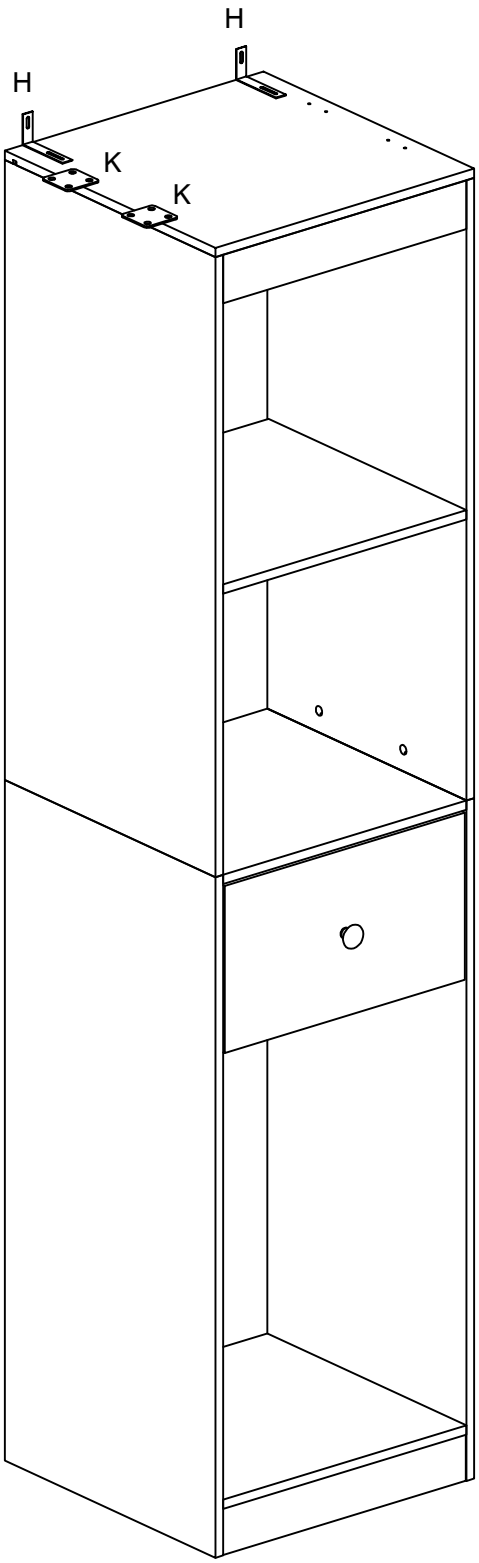

K	x2
G	x12
H	x2

Step 21

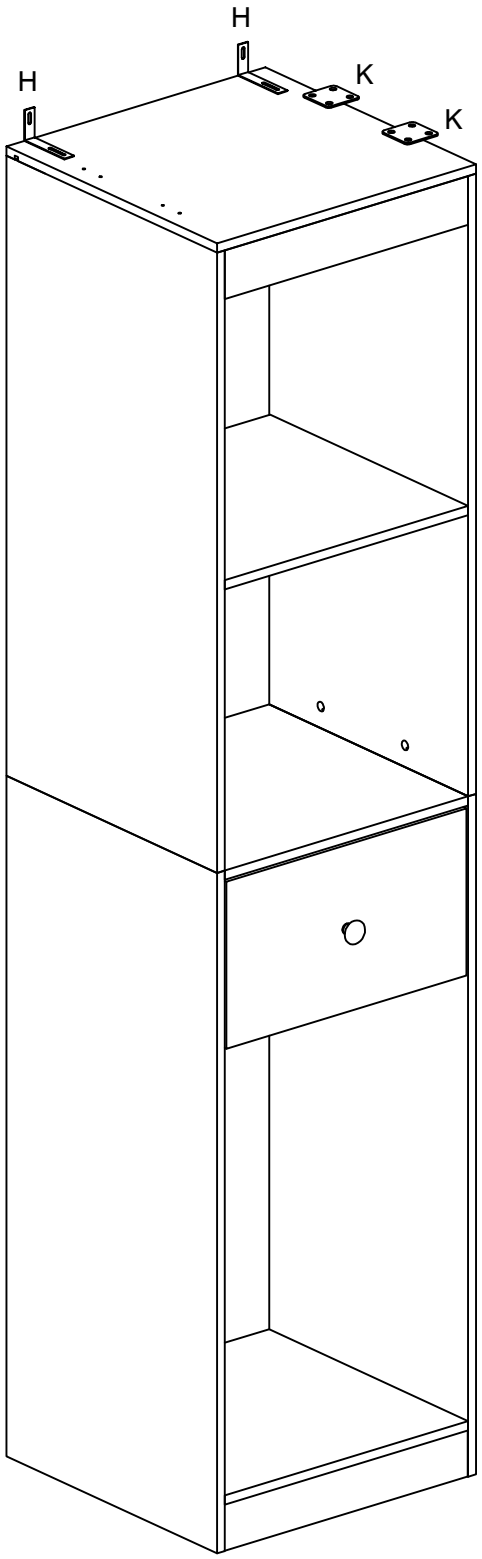

K	x2
G	x12
H	x2

Wall attached item only:

A guide to wall mounting and fixings

Warning
Wall fixing screws are not included, since different wall materials require different types of screws / fixings. Please ensure you use the correct screws / fixings for your type of walls and seek professional advice if you are not sure.

Failure of the product due to incorrect fixings is the responsibility of the installer.

Important: When drilling into the walls always check that there are no hidden wires or pipes etc.

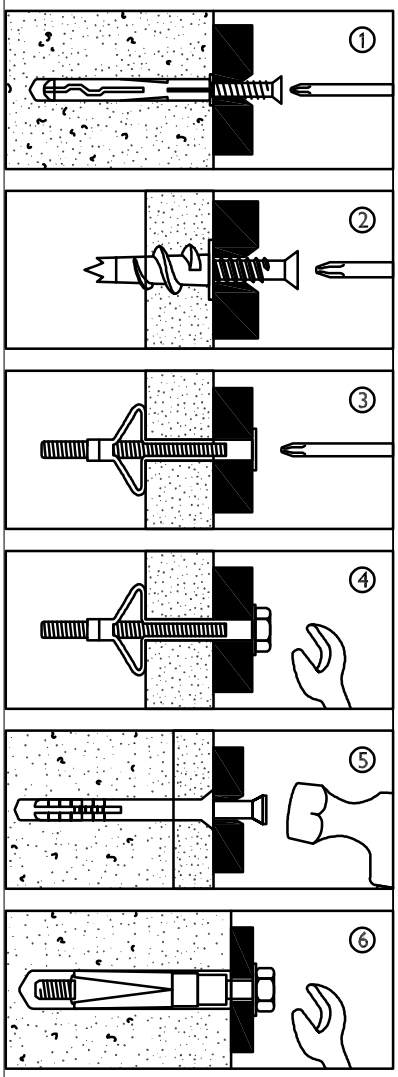

Types of walls
You can use one of the following types of wall plug if your walls are made of brick, breezeblock, concrete, stone or wood.

1. Genral Purpose wall plug
Generally aerated blocks should not be used to support heavy loads, use a specialist fitting in this case. For light loads, general - purpose wall plugs can be used.

2. Plasterboard wall plug
For use when attaching light loads on to plasterboard partitions.

3. Cavity Fixing wall plug
For use with plasterboard partitions or hollow wooden doors.

4. Cavity Fixing - Heavy Duty wall plug
For use when fitting or supporting heavy loads such as shelving, wall cabinets and coat racks.

5. Hammer Fixing wall plug
For use with walls stuck with plasterboard. The hammer fixing allows it to be fixed to the wall rather than the plasterboard. Always check the fixing is secure to the retaining wall.

6. Shield Anchor wall plug - Heavy loads
For use with heavier load such as TV and HI-Fi speskers and satellite dishes etc.

Care and maintenance
Safety: Periodically check all fittings and wall fixings to ensure they have not come loose and retighten as necessary.

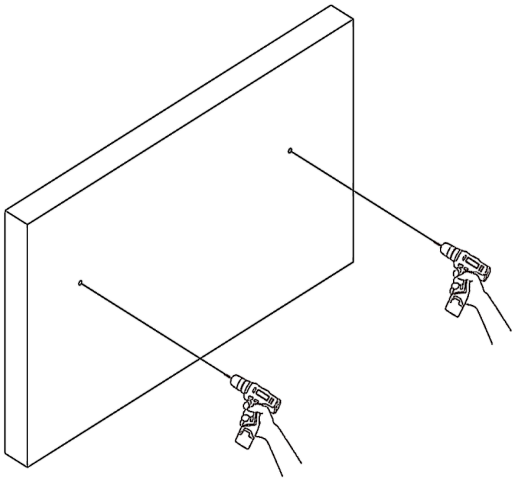

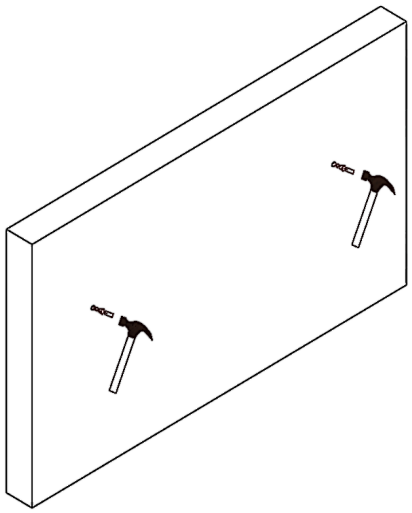



H*2

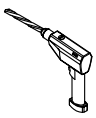



WARNING:

There is a risk of serious injury due to the wall-mounted bed tipping over.
To prevent the wall-mounted bed from tipping over,it must be permanently secured to a brick wall.If the wall structure is not masonry, qualified professionals are required to perform the wall anchoring.

Place two tall cabinets on each side of the bed, ensuring they are flush against the wall, and then mark the drilling positions on the wall.

Install a 0.24-inch drill bit on the electric drill to drill holes with a depth of 2.
16 inches.

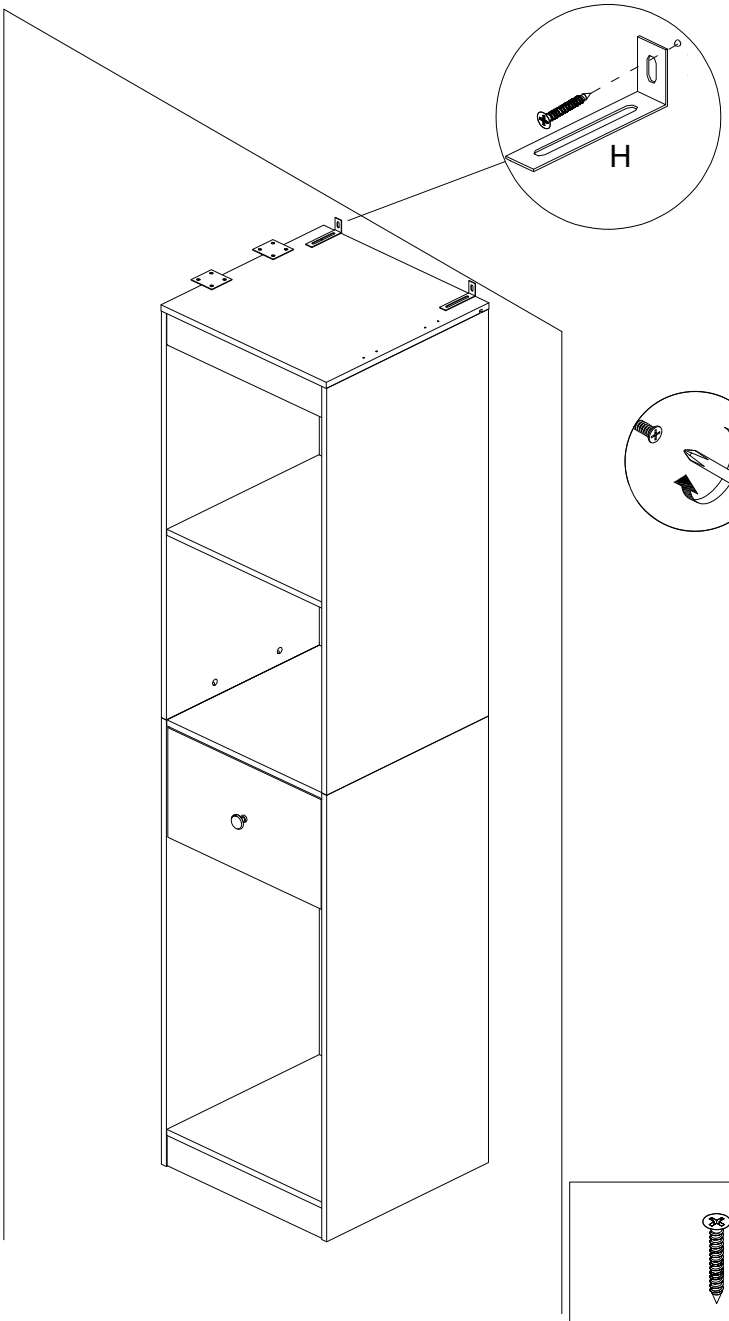

H*2