Assembly Instructions

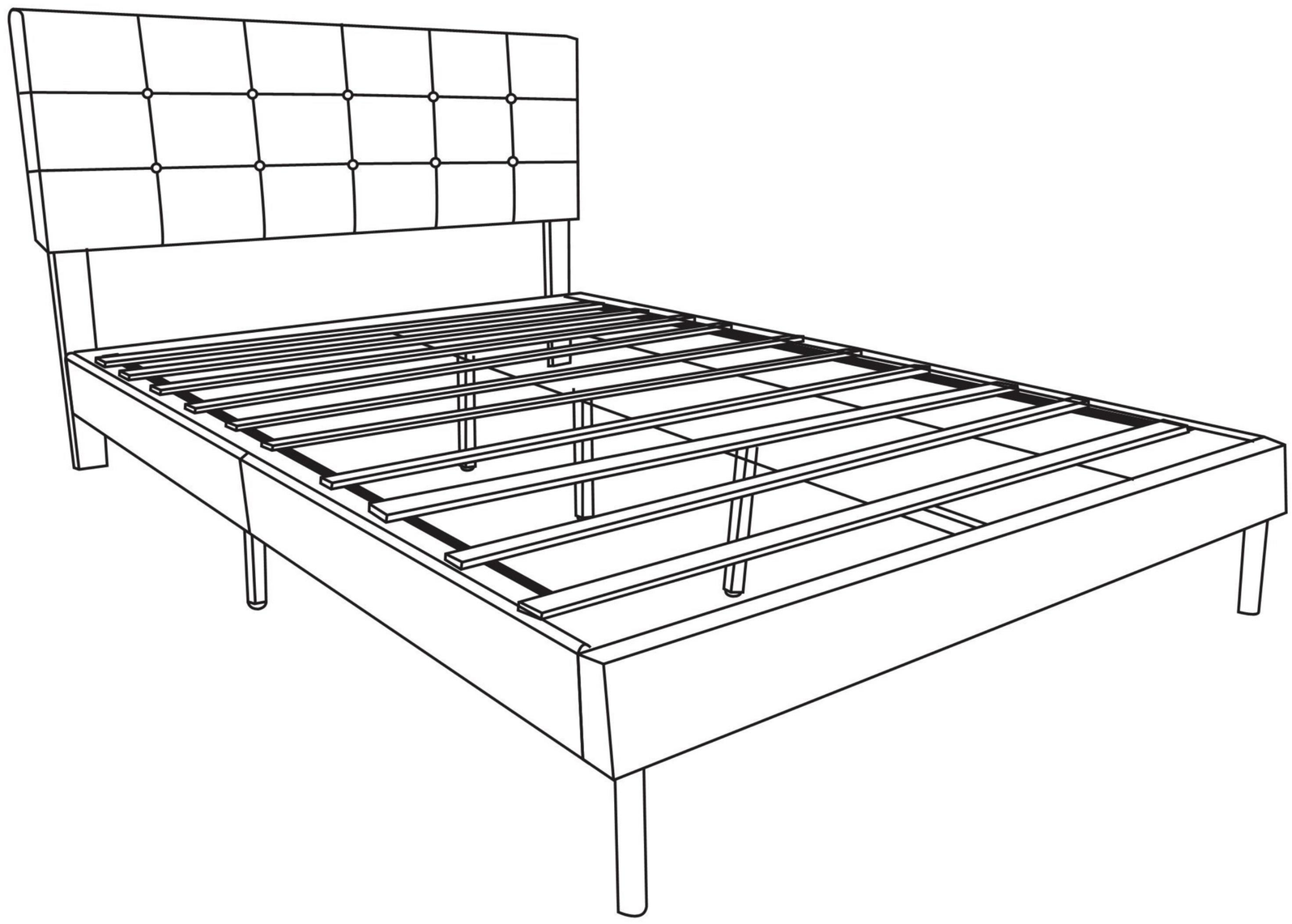

NOTE:Please read these instructions carefully before starting assembly

HASSEL-FREE WARRANTY

If there is any questions with the products, please feel free to contact with us.

- Keep furniture away from heat sources.
- Do not clean furniture with harsh cleaner or polishes. Do not use detergents, Solvents, abrasives, spray packs or leather cleaner. Use non-color mild soap with warm water to clean spills(Mix 1:10 soap to water)
- Do not place furniture under direct sunlight, material will possibly fade over time.
- Do not use on site dry Cleaning machine.
- Children should not climb or jump on the furniture.
- Do not write on furniture that is not protected by a padded barrier .

PART LIST

1

1 Headboard 1pc	2 Footboard 1pc	3 Right Side Rails 1pc	4 Right Side Rails 1pc
5 Left Leg 1pc	6 Right Leg 1pc	7 1pc	8 1pc
9 Center bar 2pcs	10 Slat 2pcs	11 Left Side Rails 1pc	12 Left Side Rails 1pc
F Supporting Foot 1 pcs	G 2pcs	H Wooden Feet 2pcs	I Supporting Foot 2pcs
J Allen Key M5x130mm 1pc			

Note: 1.Do not tighten bolts until completely assembled.
2.We usually send more screws than needed, so it is normal to have screws that are not used. Please contact us if there are any missing parts, we will replace them at the first time.

HARDWARE

2

A Short Bolt 5/16"x18MM

8pcs

B Medium Bolt 5/16"x35MM

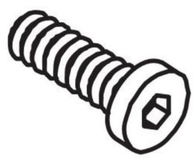

19pcs

C Long Bolt 5/16 "x50MM

10pcs

D Flat Washer

39pcs

E Nut

2pcs

SPARE

3

A Short Bolt 5/16"x18MM

1pcs

B Medium Bolt 5/16"x35MM

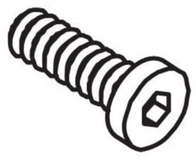

1pcs

C Long Bolt 5/16 "x50MM

1pcs

D Flat Washer

1pcs

E Nut

1pcs

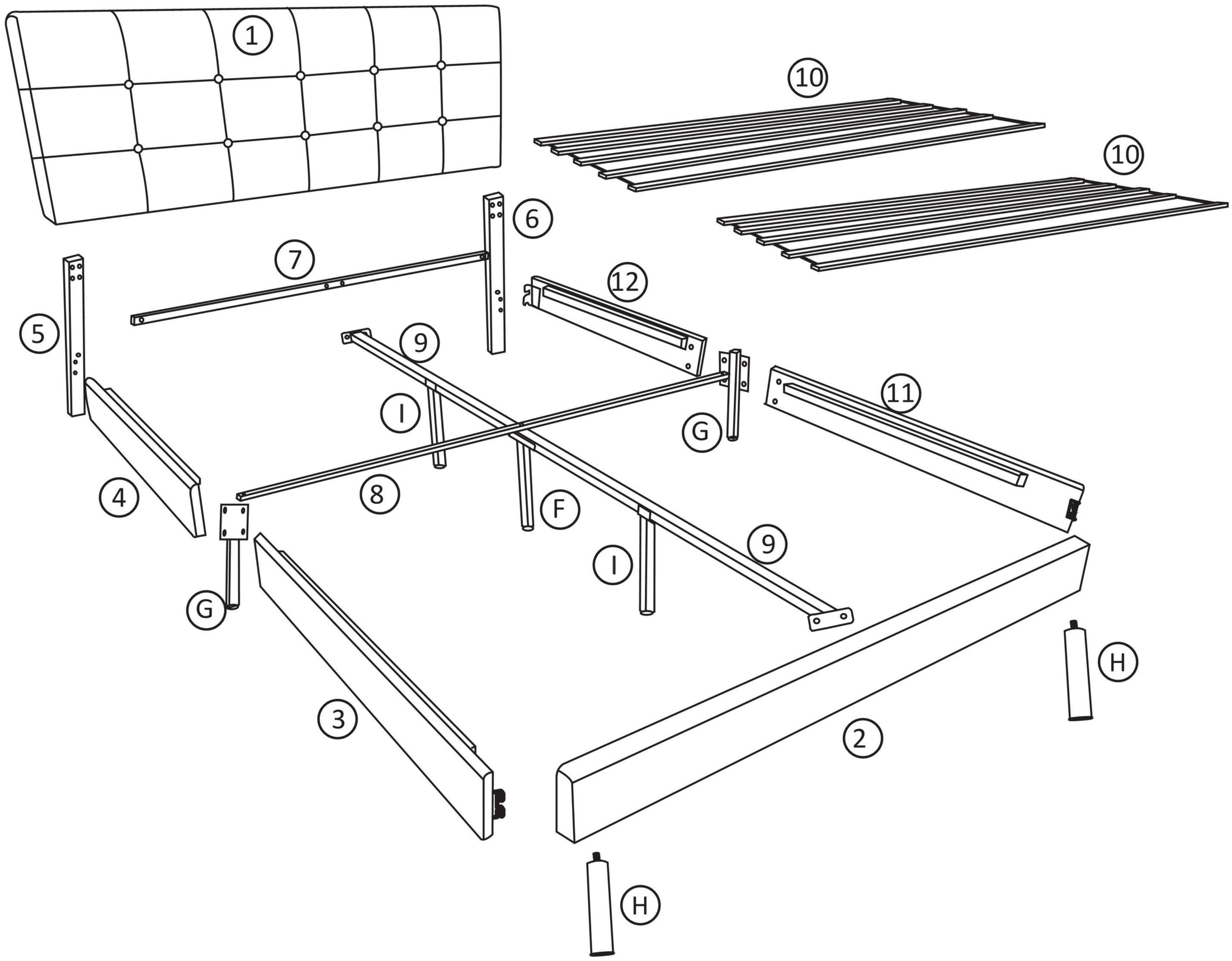

Please cut the elastic belt before assembly

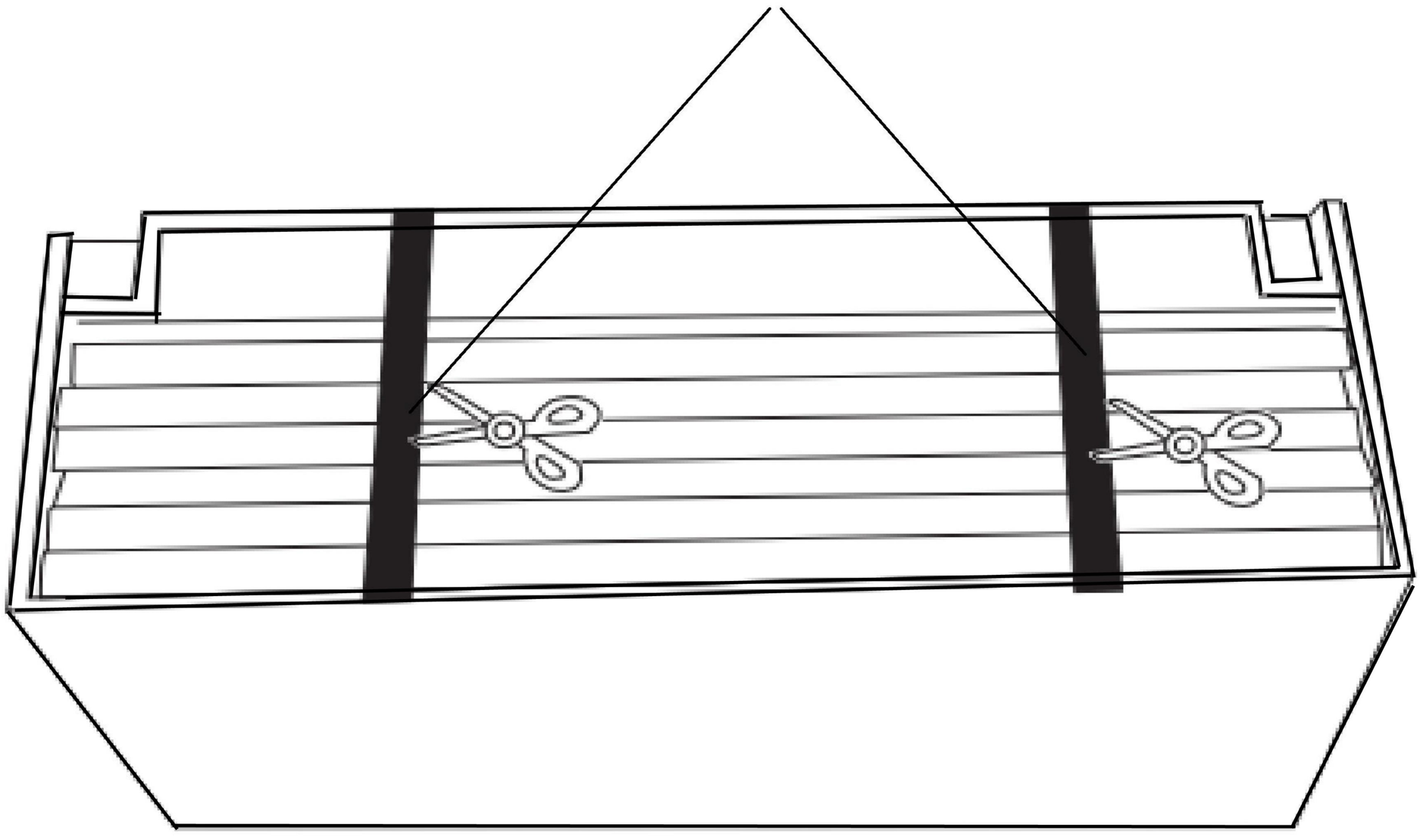

ASSEMBLY INSTRUCTIONS

STEP 1:

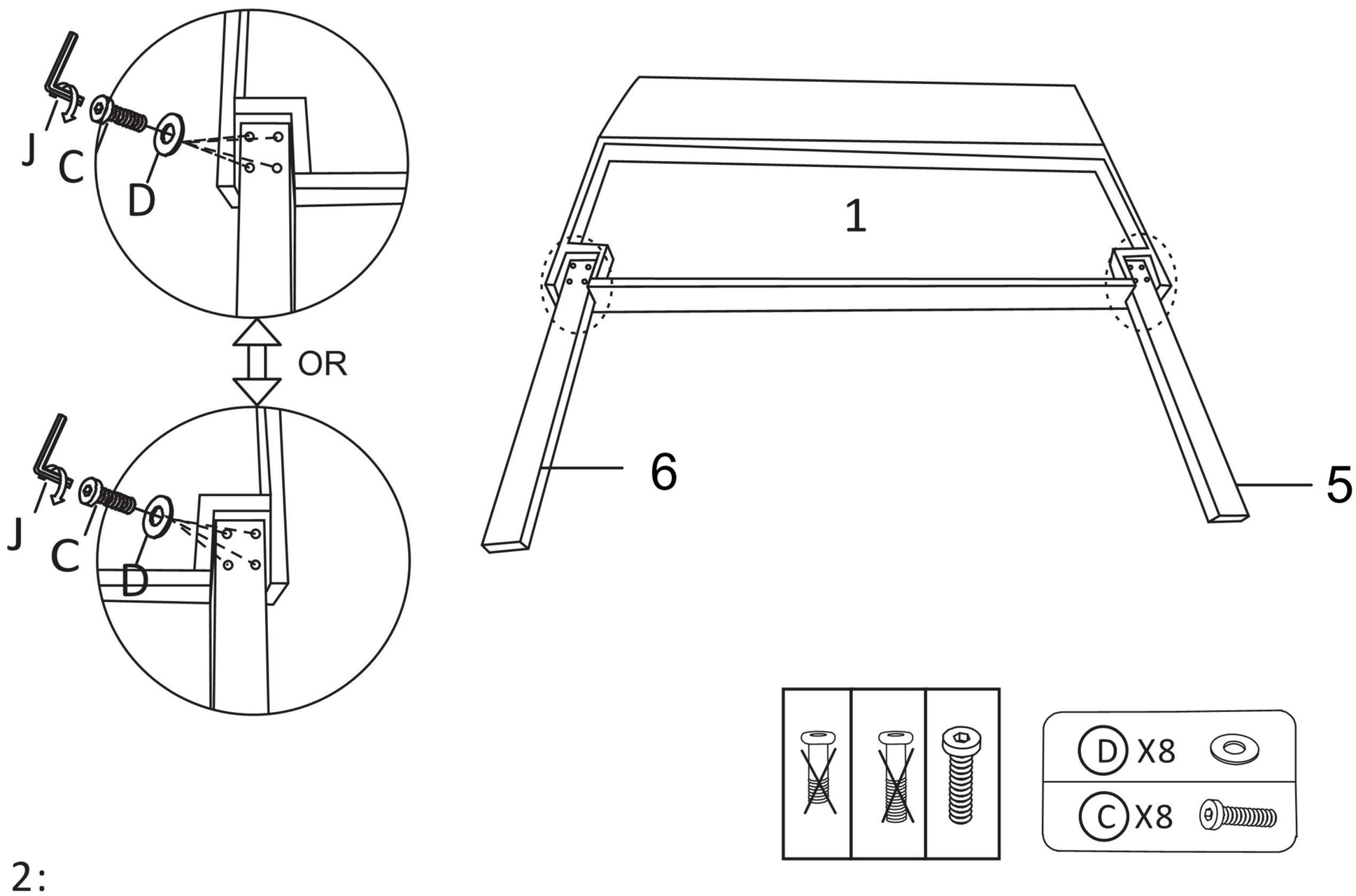

STEP 2:

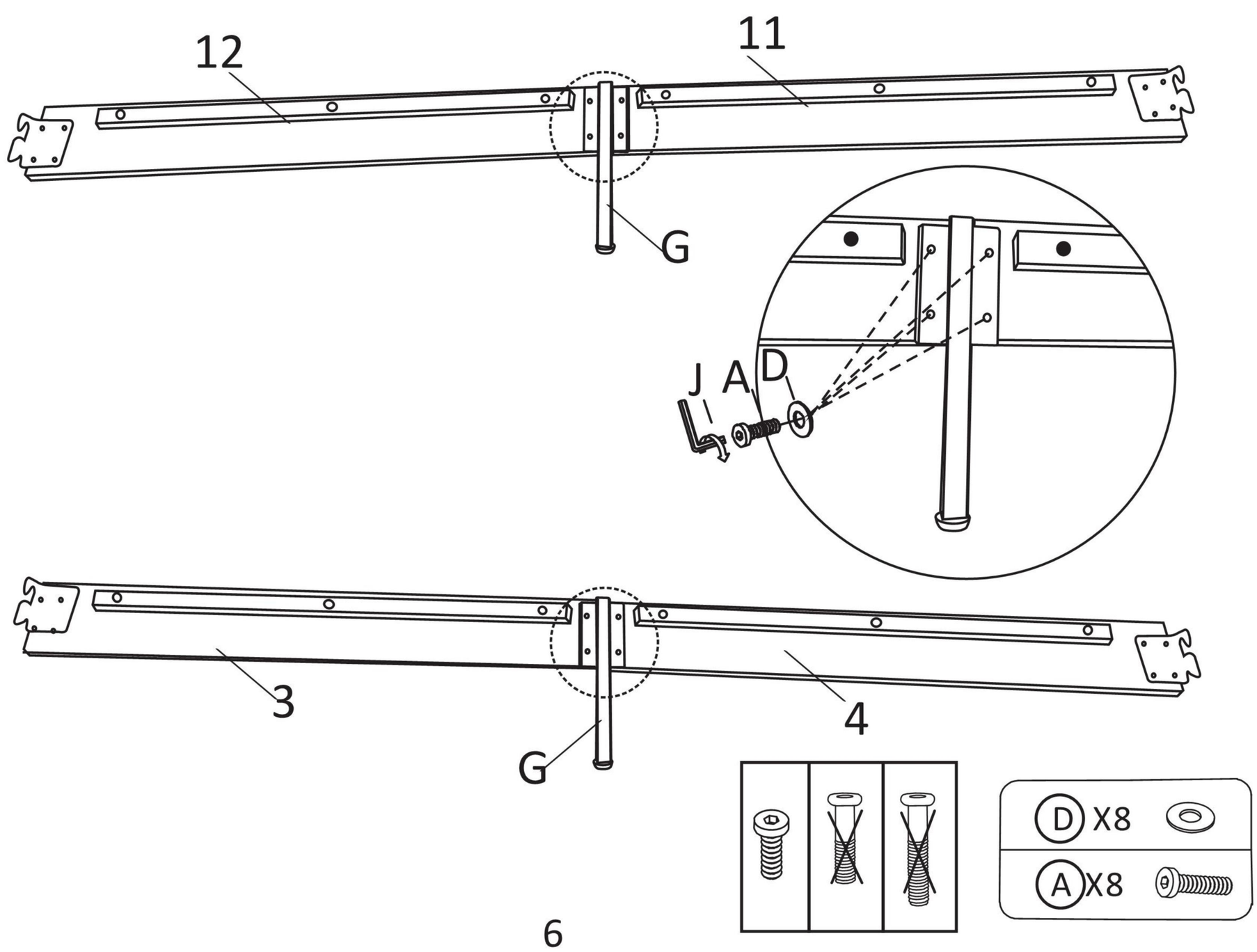

STEP 3:

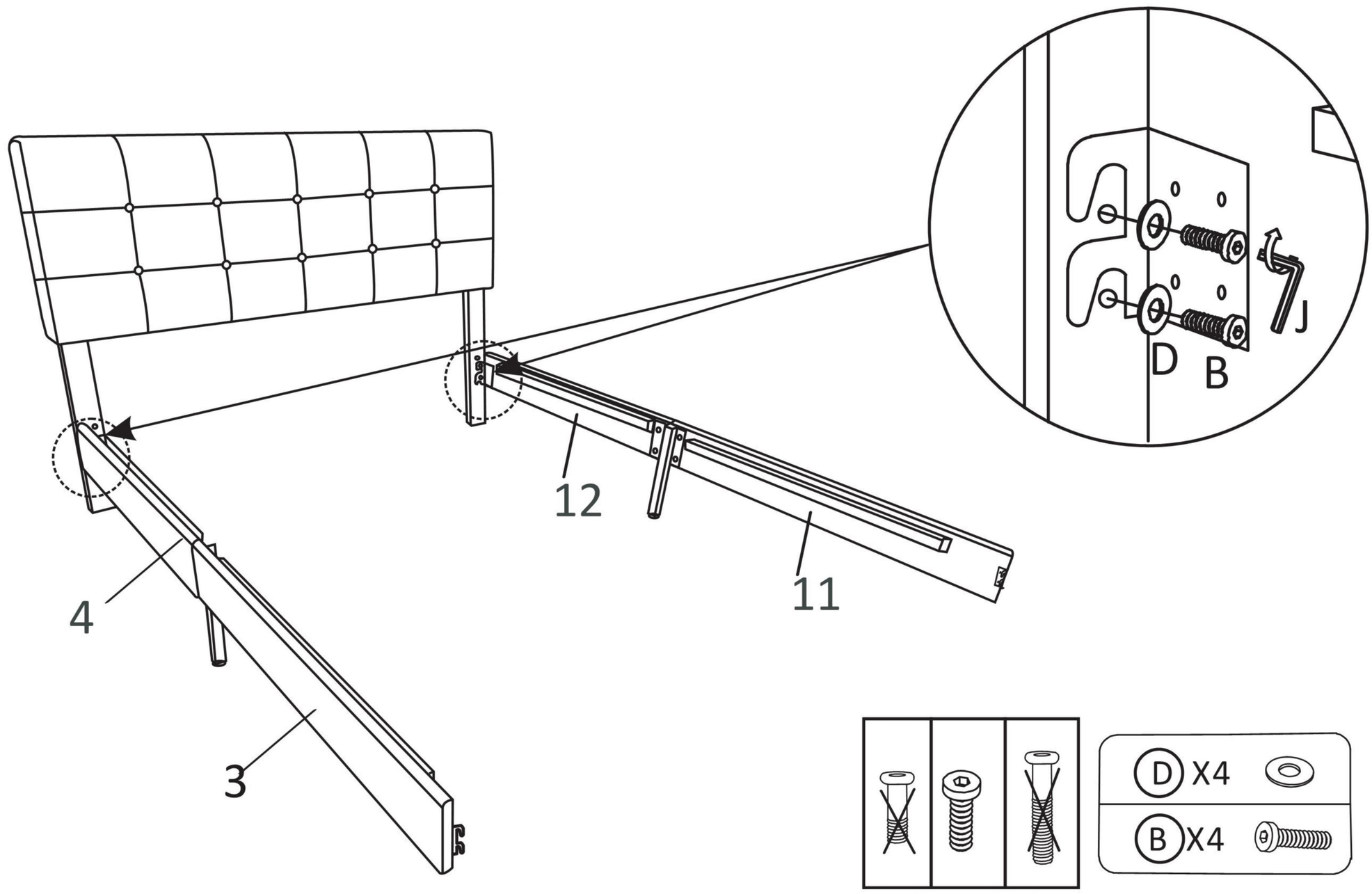

STEP 4:

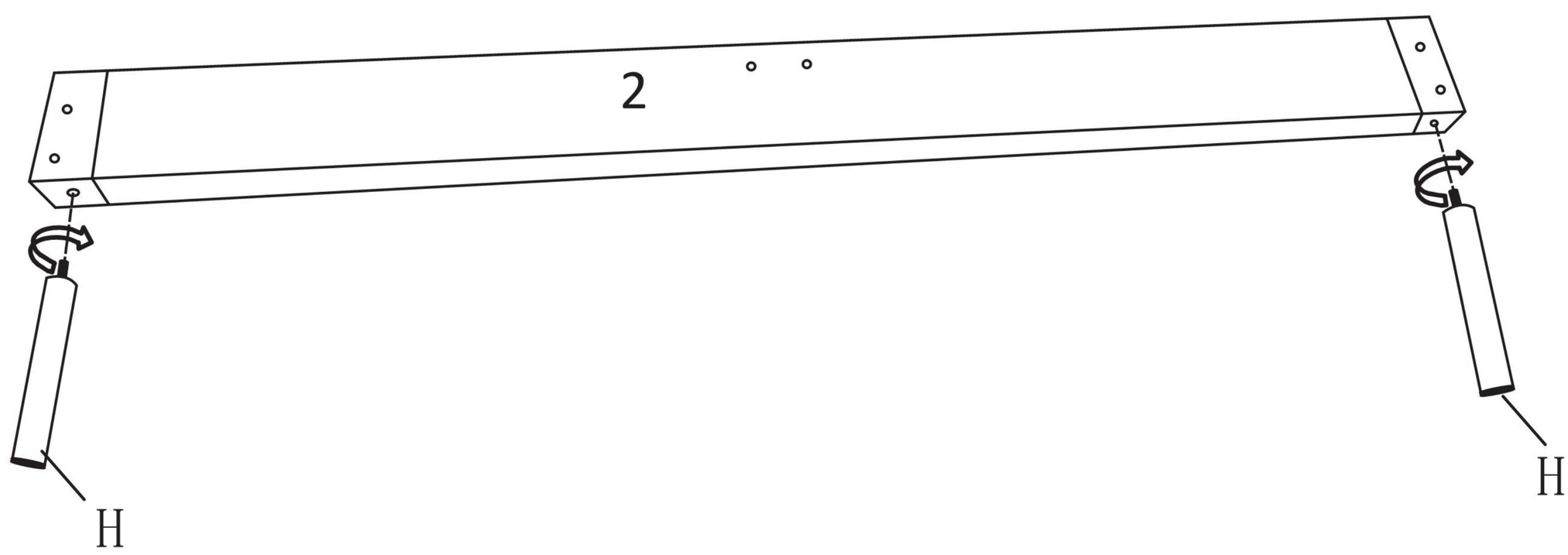

STEP 5:

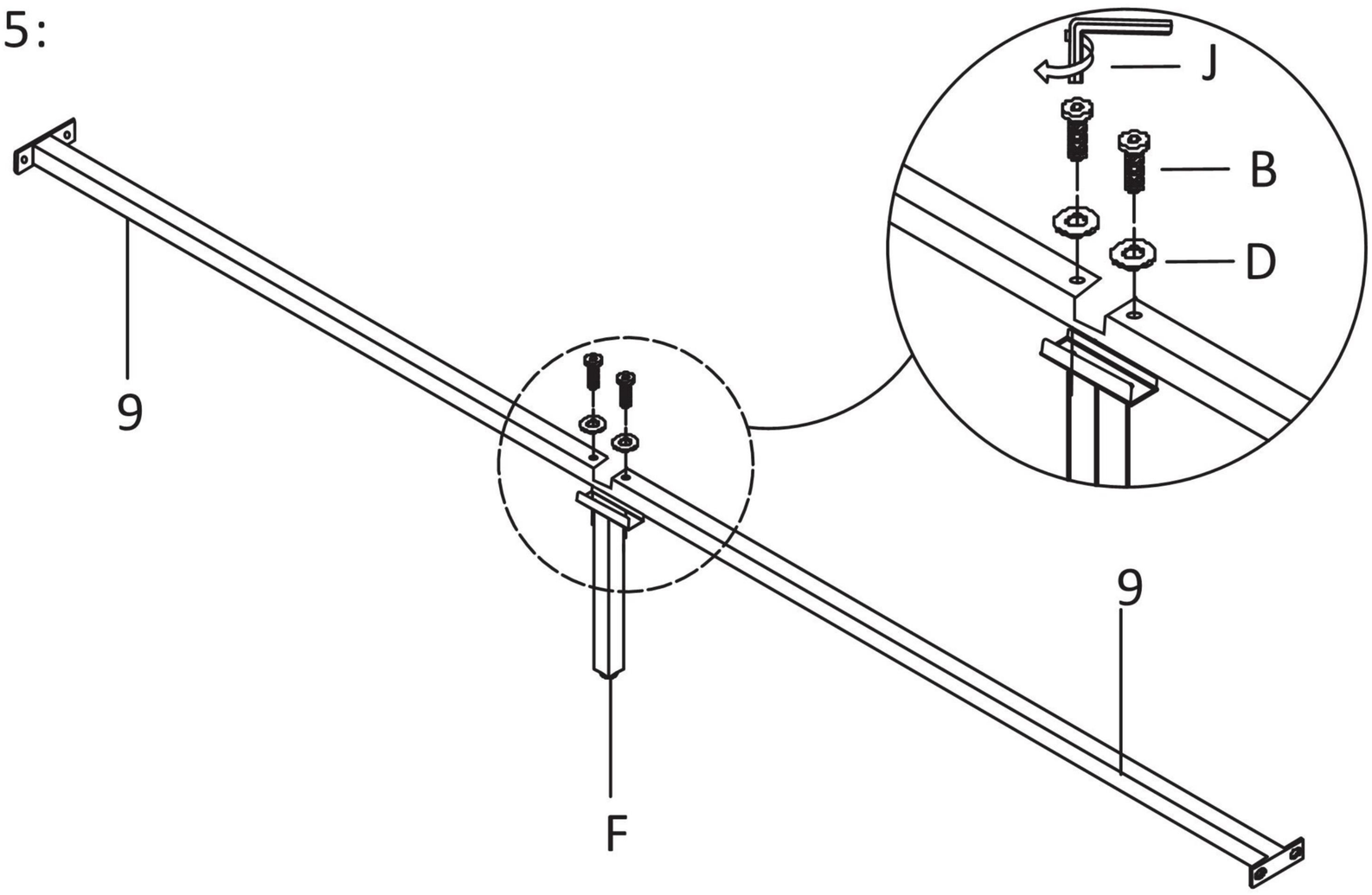

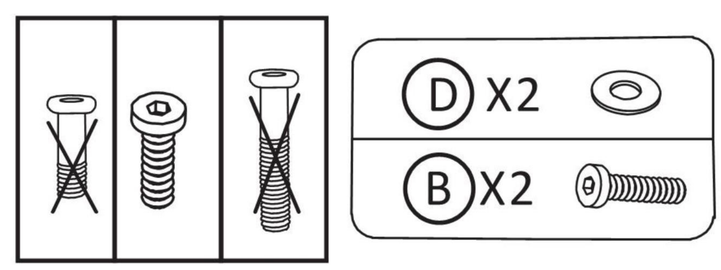

STEP 6:

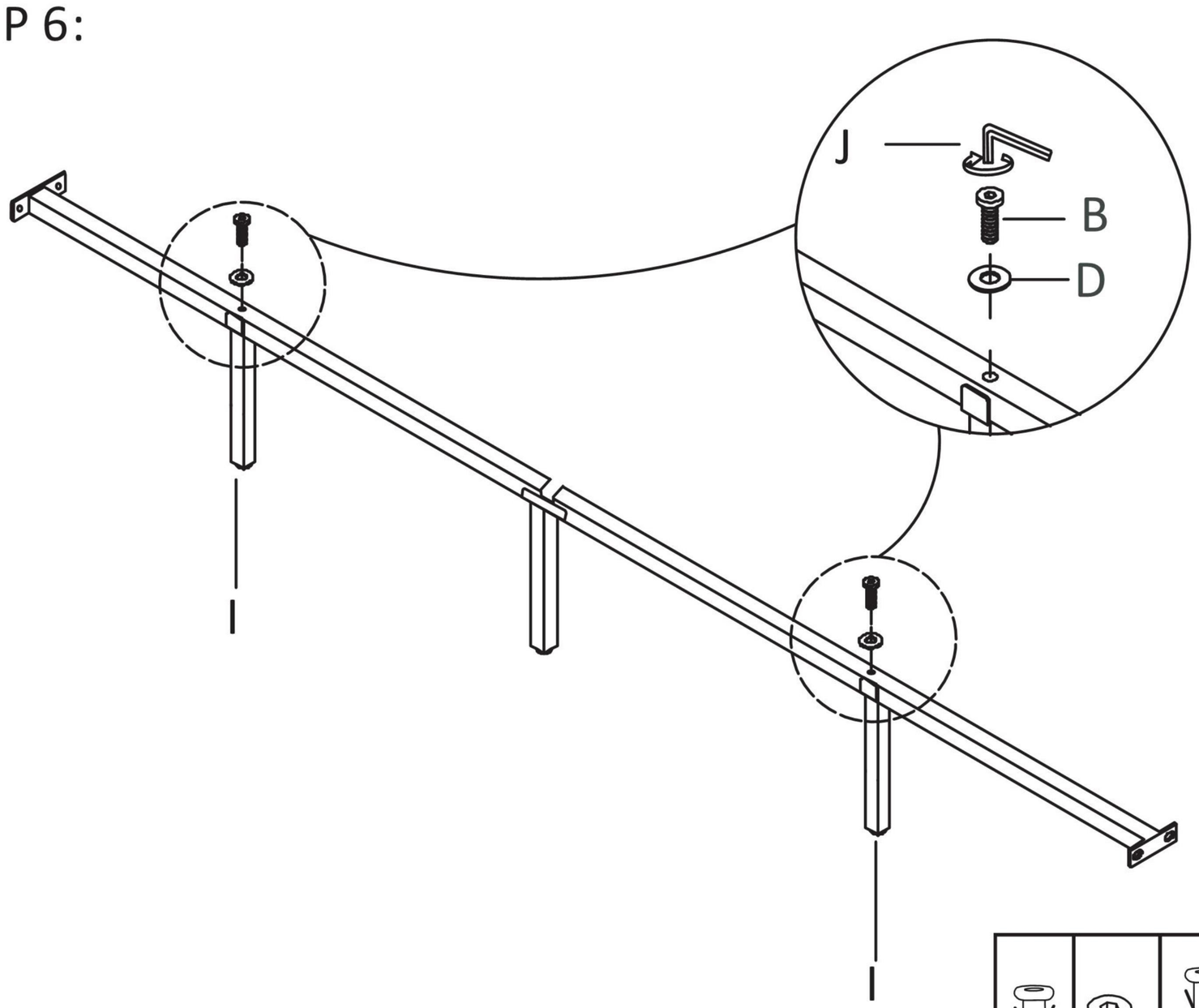

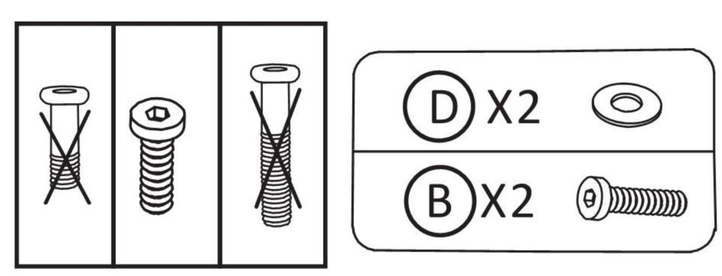

STEP 7:

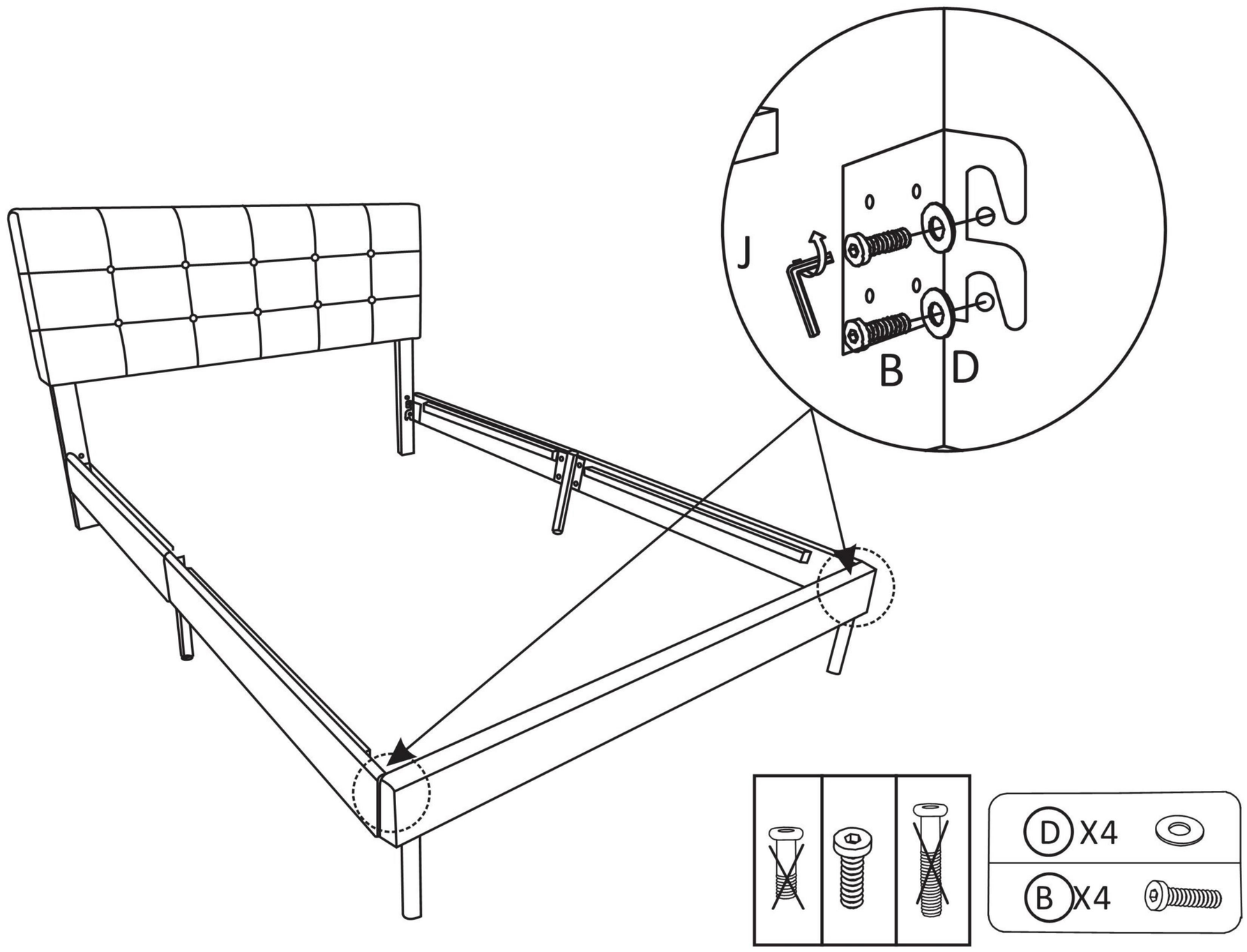

STEP 8:

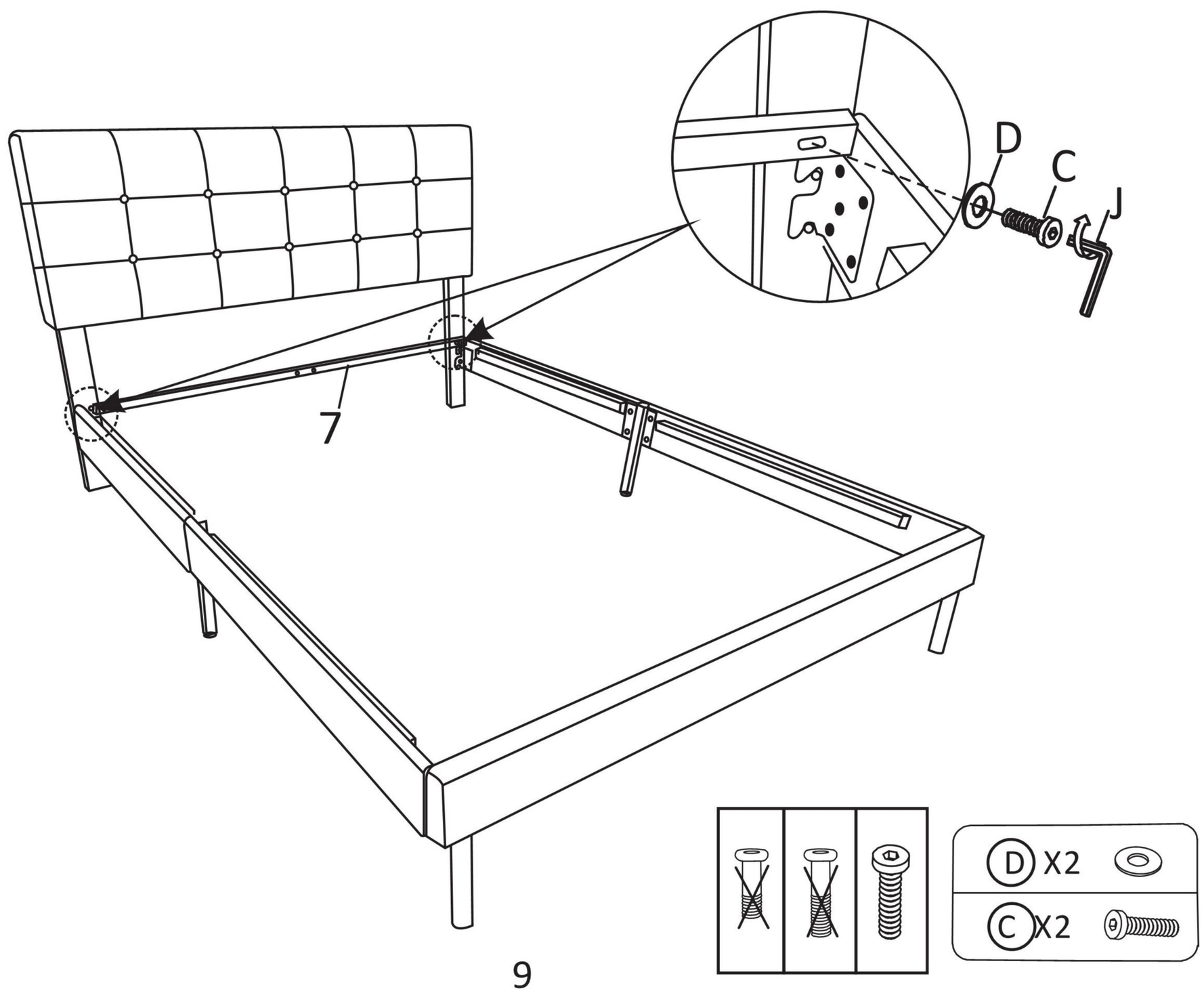

STEP 9:

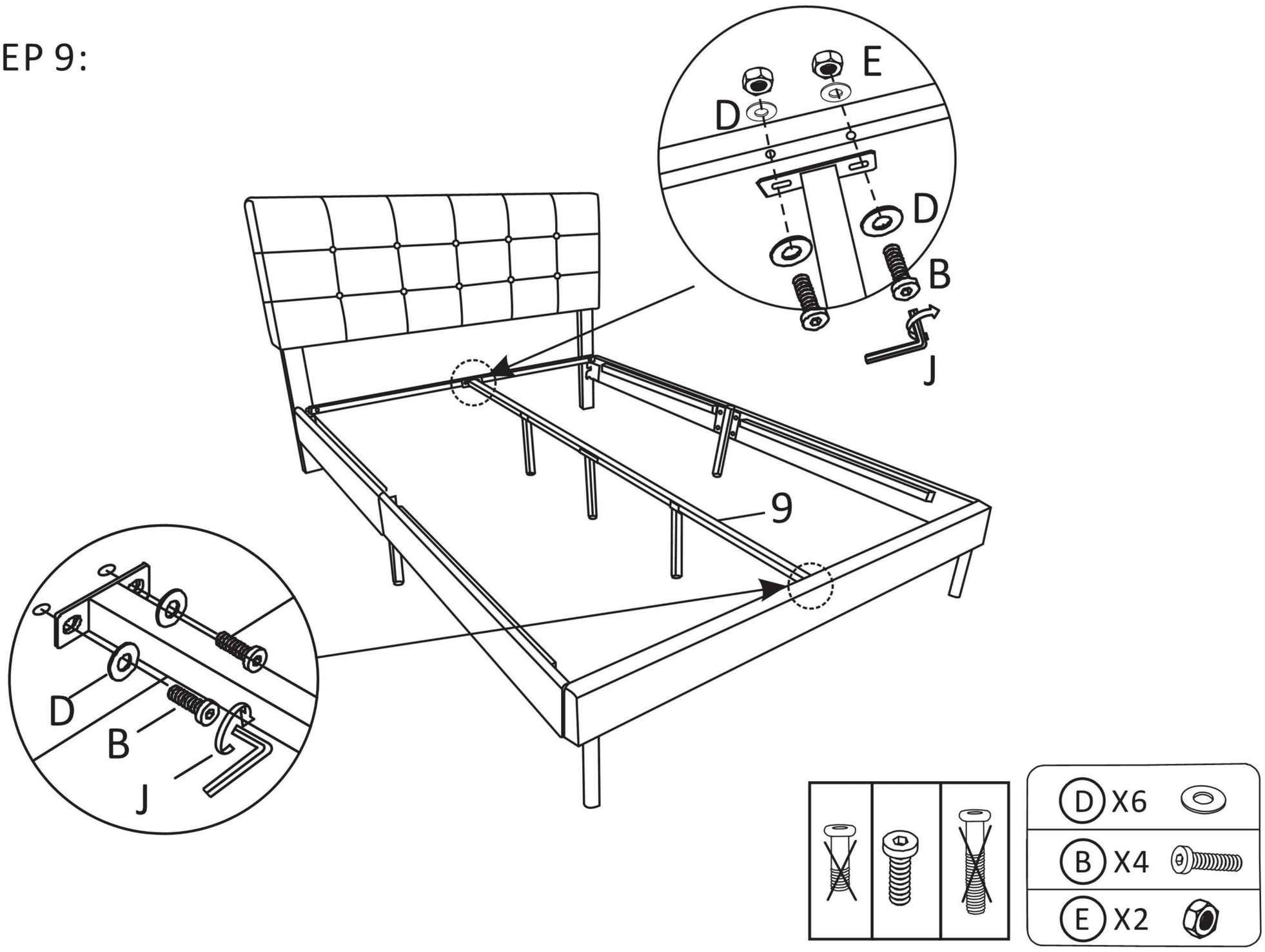

STEP 10:

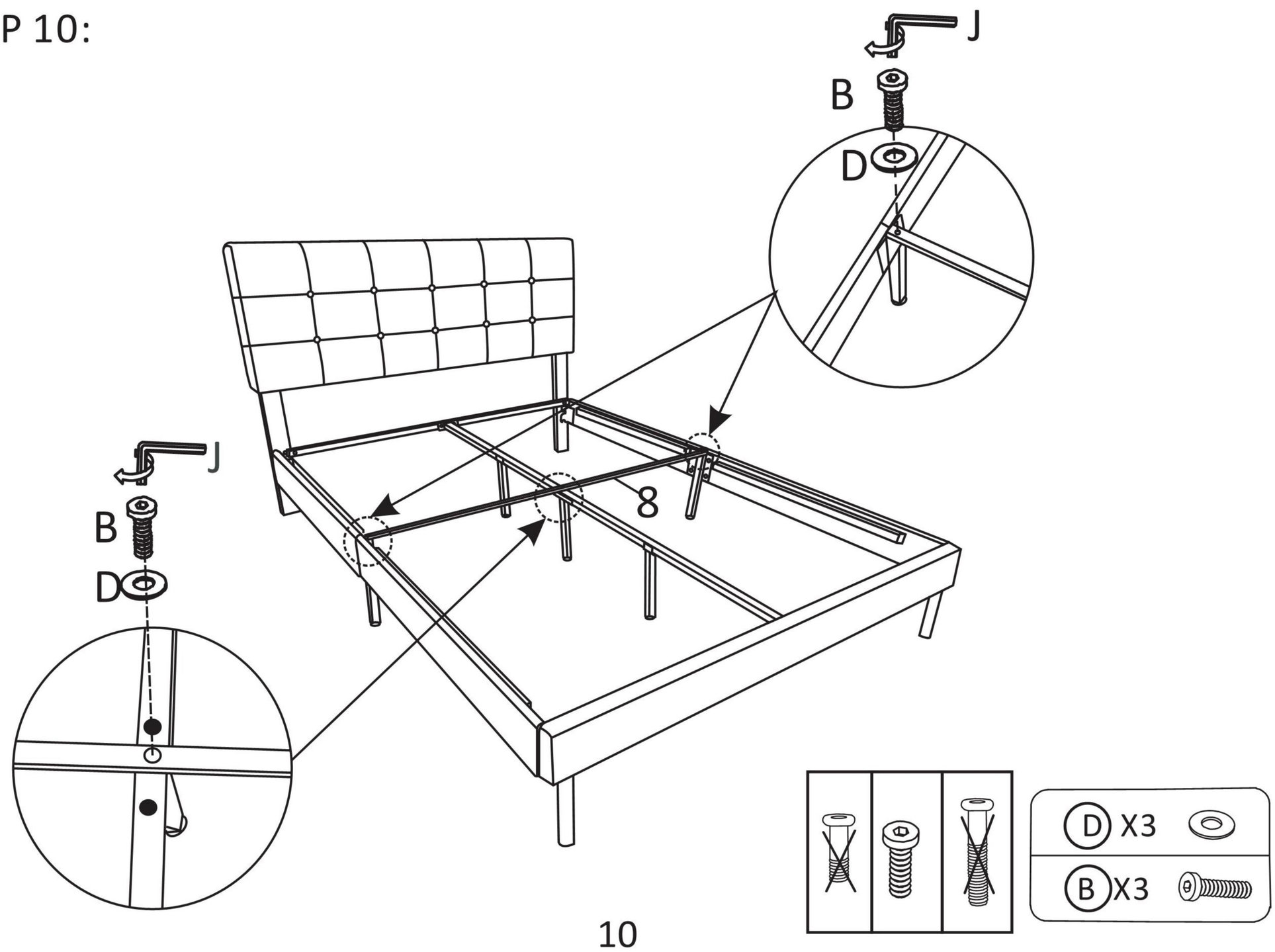

STEP 11:

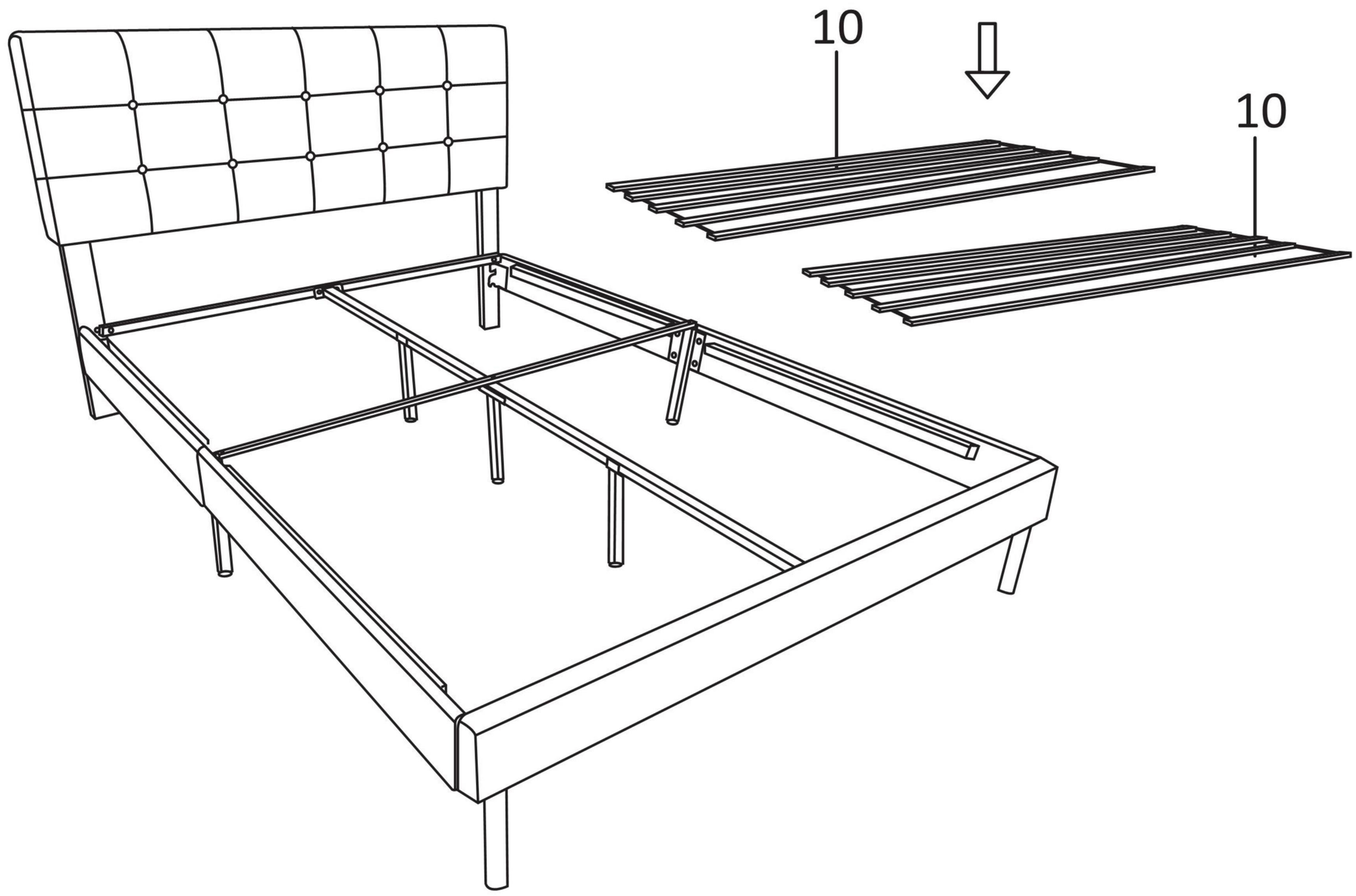

STEP 12:

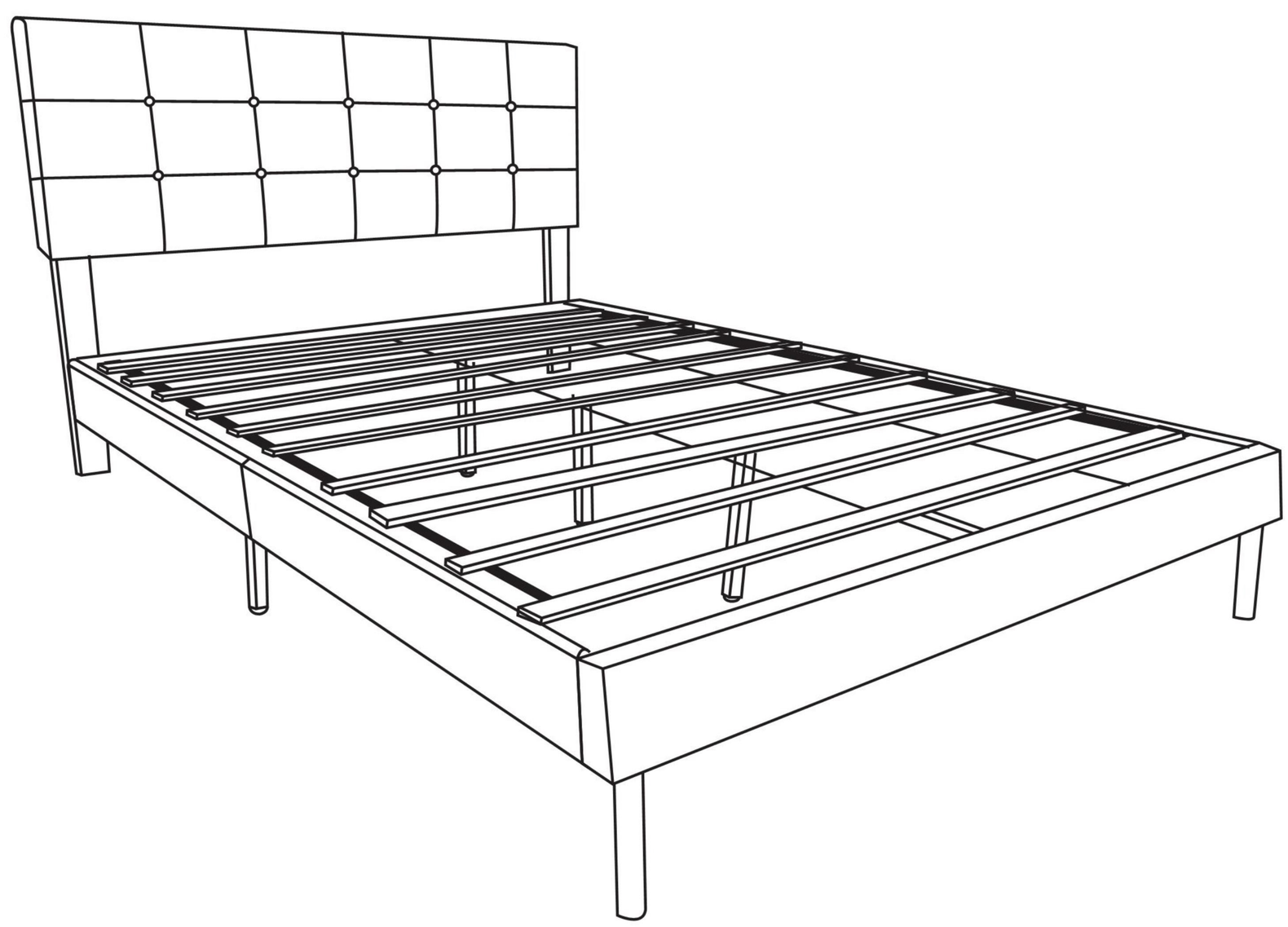

WARRANTY

We strive to provide high quality products and do our best to meet the needs of every customer who orders products or services from us.

Are you having difficulty with assembly? Missing parts?