Exhaust Fan

Exhaust Fan

USER MANUAL

Thank you for choosing our product. Please read this user manual thoroughly before installation and use. Retain this manual for future reference.

IMPORTANT TIPS

⚠ Safety Instructions

Please Read and follow all safety instructions before use.

1.Turn off the power before installation.
2.Keep out of reach of children.
3.Do not disassemble or modify the product.
4.This product is designed for indoor use only.
5.Keep away from flammable materials.

⚠ Cleaning & Maintenance

1.Always turn off the power before cleaning.
2.Do not disassemble or wash the bathroom fan with water.
3.To clean the fan, remove the entire bathroom fan and use a dry brush or blower.

CONTENTS

BEFORE INSTALLATION 02

INSTALLATION 03

Step 1: Connect the Panel.....3

Step 2: Power On and Remote Control Pairing Test.....3

Step 3: Connect the Ventilation Duct.....4

Step 4: Prepare Ceiling Opening.....5

Step 5: Connect to Power Supply.....5

Step 6: Two Machine Installation Methods.....6

Step 7: Correctly Connect the Panel.....7

Step 8: Compress the Spring Clips on Both Sides.....7

REMOTE CONTROL 08

COMMON PROBLEM 13

WARRANTY 15

BEFORE INSTALLATION

- Verify that all parts listed are included.
- Ensure the fan dimensions are compatible with your duct opening.
- Test the fan while plugged in to confirm proper functionality.

Parts

① Machine	② Panel	③ Remote control	④ Auxiliary Accessories
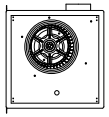 1	1	1	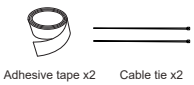 1
⑤ Clamp	⑥ Manual	⑦ Screw	⑧ Ventilation pipe
2	1	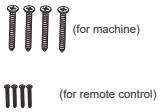 4x2	1
⑨ Wiring terminal	⑩ Glove	/	/
1	1	/	/

Parameters (Reference Only)

Product Name	Box Size	Panel Size
Exhaust Fan	12.4″x11.22″x3.94″	13.78″ x 13.78″
V/Hz	**Air outlet Size**	**Fan Power**
110V,60Hz	4″	30W
Light Power	**Audio Power**	**Air Volume**
25W	5W	190CFM

* **Note**: Specifications are for reference only.
Please refer to the product nameplate for accurate data.

INSTALLATION

Notice

1. Please read these instructions carefully before installation.
2. Installation and wiring must be carried out by a qualified electrician.
3. Always turn off the power supply before installation to prevent electric shock.

Step 1 Connect the Panel

Connect the front panel ② to the machine ①.The panel must be connected before performing functional tests.

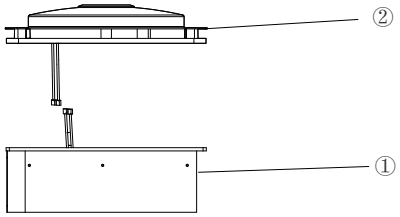

Step 2 Power On and Remote Control Test

1.Turn on the power to test the machine.
2.After confirming the test is successful, disconnect the panel from the machine.

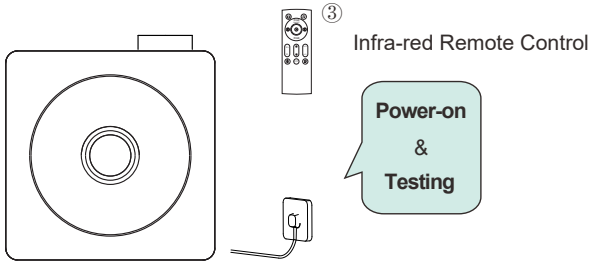

* **Note**:Infra-red remote control should be pointed directly at the device to ensure proper signal reception and reaction.
The panel must be removed after testing to allow the box to be installed on top.

INSTALLATION

Step 3 Connect the Ventilation Duct

* **Note**: This bathroom fan features a specially designed air outlet to increase airflow. To ensure proper function and avoid compatibility issues, please follow the instructions below to connect the included ventilation duct to your home's existing duct.

Connection Options:

• Option 1 – Clamp Method

Use appropriate tools to secure the ventilation pipe ⑧ to the air outlet using the hose clamp ⑤ .Tighten securely to prevent air leakage.

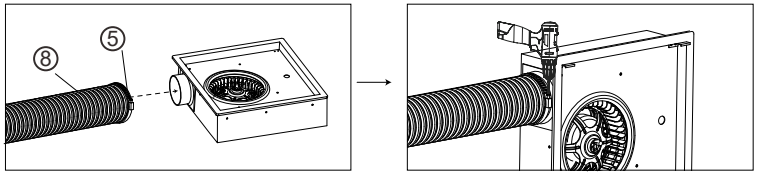

• Option 2 – Tape Method

Attach the ventilation pipe ⑧ to the air outlet using sealing tape ④ Ensure the connection is firm and airtight.

• Option 3 – Temporary Tape, Then Clamp

First hold the pipe in place using tape ④ , then reinforce it securely using a hose clamp ⑤.

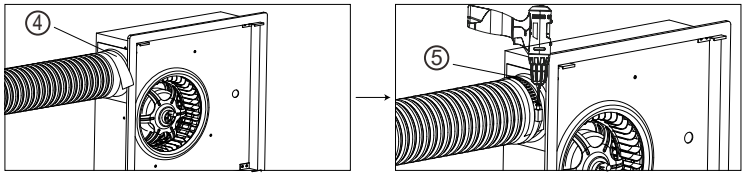

• Option 4 – Temporary Tape, Then Cable Ties

First hold the pipe in place using tape ④ , then fasten it with cable ties ④ for added stability.

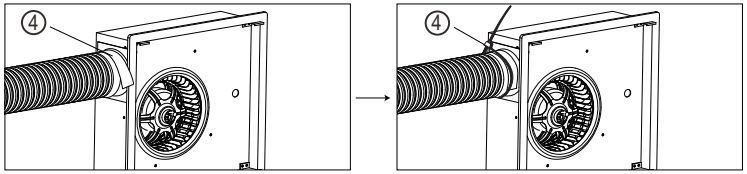

INSTALLATION

Step 4 Prepare Ceiling Opening

use appropriate tools to cut an opening measuring 11.22x11.22 inches at the desired installation location in the ceiling.(You can also use the size paper prepared for you to fix the position and make the opening.)

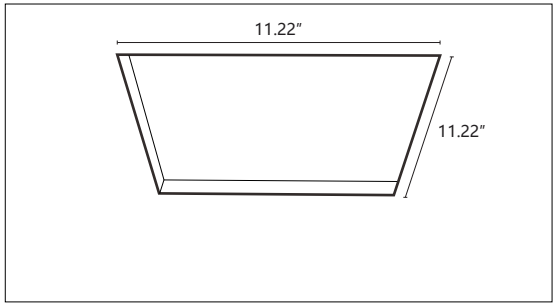

Step 5 Connect to Power Supply

- **Option 1- Direct Plug Connection**

Plug the bathroom fan into a standard power outlet. If hardwiring is necessary, consult a licensed electrician.

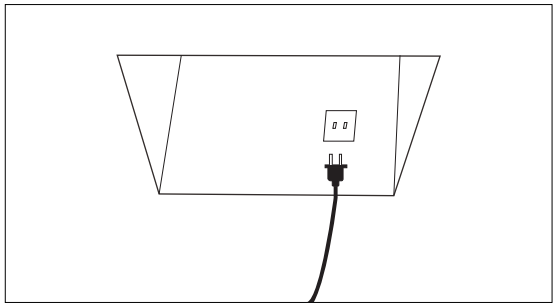

- **Option 2 - Wire Terminal Connection**

1. If there is no pre-installed power outlet at the installation site, you may use the wiring terminals ⑨ to connect the power lines directly.
2. Wiring configurations may differ between households. The example shown here is for reference only.Please follow your actual wiring setup.

INSTALLATION

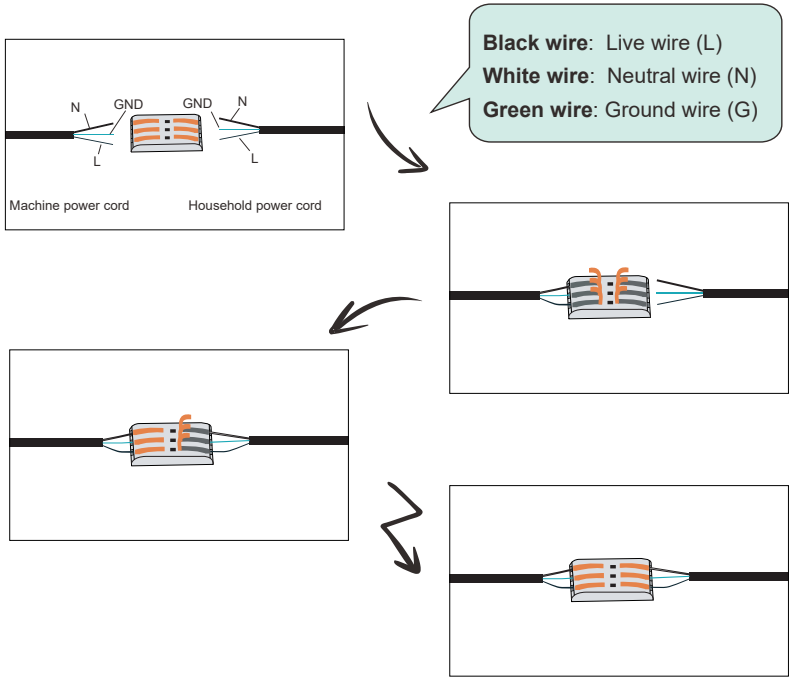

⚠ Improper electrical connection may result in shock, fire, or equipment damage. Always ensure compliance with local electrical codes.

Step 6 Machine Installation

Top Entry Installation

Tilt the machine ① slightly and carefully insert it into the upper ceiling opening.Once in place, fix and bond the ventilation pipe ⑧ with the pre - reserved pipeline at home with tape ⑫ .

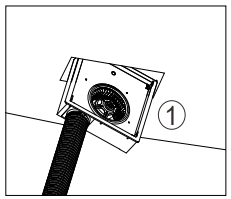

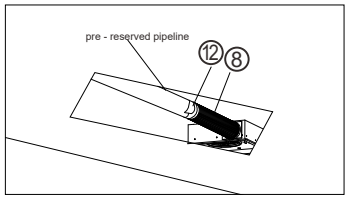

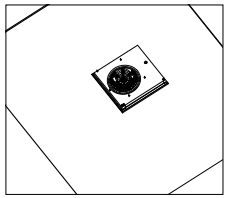

the machine installation completed

INSTALLATION

Step 7 Correctly Connect the Panel

Correctly connect the panel ② to the machine ①
to ensure the machine can operate safely.

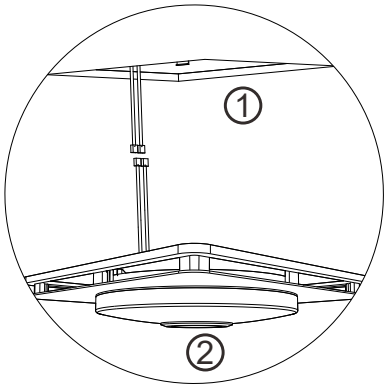

Step 8 Compress the Spring Clips on Both Sides

Compress the spring clips on both sides, push them into the machine until they pop out, and the installation is complete.

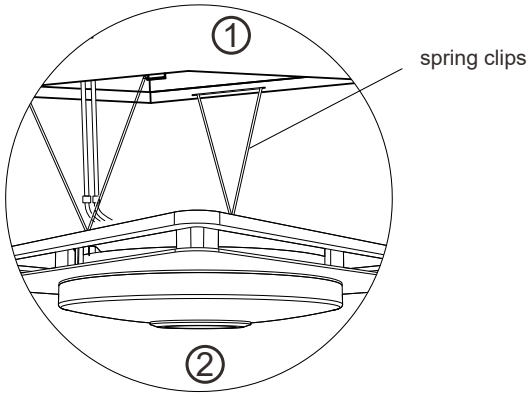

REMOTE CONTROL

③

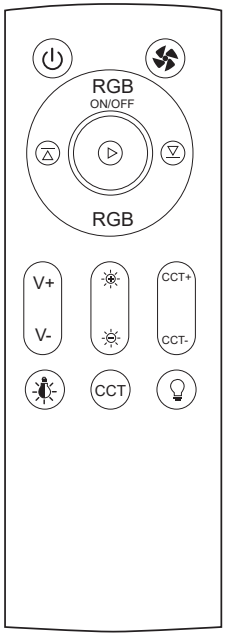

*** Note**:

Please make sure the time exceed 1s when switching between different keys of the remote control. If the time is less than 0.5s, the receiver of the remote control may not be able to obtain a signal to respond because the receiving time is too short.

All off: Short press to turn off all functions.

Fan: Short press to turn the fan on/off.

REMOTE CONTROL

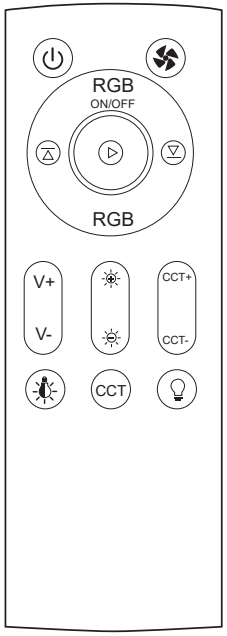

* **Bluetooth pairing**:

1.When you power on, the Bluetooth will automatically turn on and you will hear a "boop-boop" sound. You can use your phone to pair it.

2.On your phone, turn on Bluetooth and search for devices.

3.Locate "Exhaust Fan" in your device's Bluetooth list and select it.

4.You will hear a "boop" sound indicating a successful Bluetooth connection.

5.When you don't want to use Bluetooth, you can disconnect it via your phone.

Play/Pause: Once paired with your phone via Bluetooth, you can play or pause music.

Previous song: Short press to go to the previous song.

Next song: Short press to go to the next song.

* **Note**: To switch the Bluetooth connection to another phone, you must first delete the previous phone's pairing, power off and restart the fan, then pair again.

REMOTE CONTROL

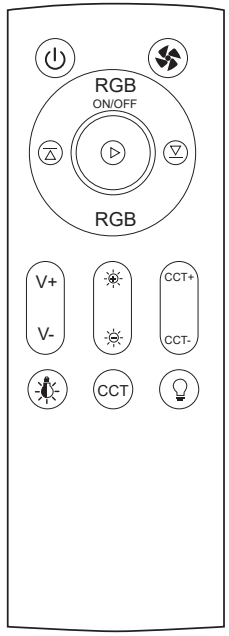

V+/V- : Short press to adjust volume in steps, long press to adjust volume smoothly.

Brightness: After turning on the light,short press to adjust brightness in steps, long press to adjust brightness smoothly.

Color Temperature: After turning on the light,short press to adjust color temperature in steps, long press to adjust color temperature smoothly.

REMOTE CONTROL

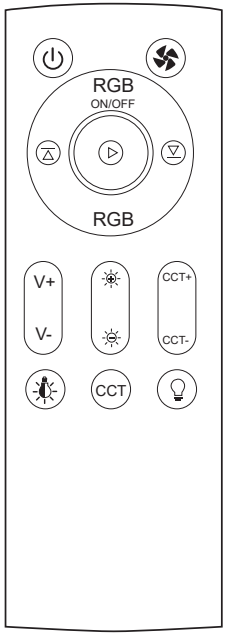

RGB ON/OFF	**RGB(on/off):** Short press to the RGB ON/OFF.
RGB	**RGB:** Short press to select RGB colors or dynamic mode. There are 7 color to choose from:Yellow, Cyan, Purple, Red, Green, Blue, White.

* **Note**: The RGB and The Light " " have a memory mode that can be reset after power outage.

REMOTE CONTROL

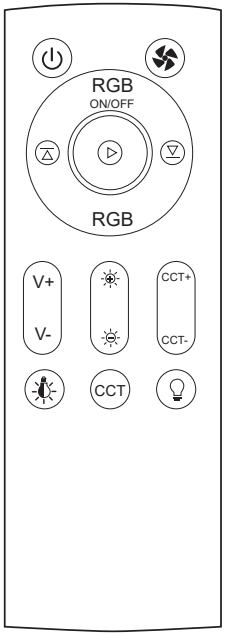

	Light: Short press to turn light on/off.
CCT	**3 CCT:** After turning on the light,tap to switch color temperature: 3000K → 4500K → 6500K.
	Night Light: Short press to turn the night light on/off.

COMMON PROBLEM SOLUTIONS

Issue	Possible Cause	Solution
The fan seems louder than it should.	The CFM is too large.	Be sure the CFM rating on the fan matches the square footage of your room.
	The damper is damaged or not working properly.	Check the damper to ensure it is opening and closing properly. If the damper has become damaged,please contact Customer Service.
	The bend in the duct is too close to the fan discharge.	Be sure you do not have any sharp bends in the duct closer than 18 in. to the fan discharge.
	The fan discharge is reduced to fit a smaller duct.	Use the recommended size ducting to reduce fan noise.
The fan is not clearing the room.	The fan body is not attached securely.	Be sure the fan is securely attached to the ceiling joists.
	There is insufficient airflow intake in the room.	Be sure a door or window is slightly ajar or opened to allow airflow.The fan is not able to draw air out of the room without enough airflow to draw from.
	/	NOTE:Using a tissue is not the correct method for determining if the fan is operating properly. If the fan clears steam from the room within approximately 15 minutes of completing your shower, then the fan is operating properly.
The fan is too large.	Improper installation position.	First, ensure that the ceiling opening measures 11.22” × 11.22” and that the distance from the rooftop to the ceiling is at least 11”. Then, insert the unit diagonally into the ceiling opening.
The remote control is not working.	Obstruction between the remote and the machine.	The remote uses infrared technology. Ensure there are no obstructions—such as walls or furniture—blocking the signal between the remote and the machine.

Q&A

1. How should I adjust if the ceiling hole size doesn't match the fan?

Please double check your room size before purchase the mounting dimention of our fan are 11.22" x 11.22" ceiling opening.If the hole is too small,trace the housing onto the ceiling and then cut with a keyhole saw. fit's too big, patch it with a piece of drywall to fit the fan appropriately.

2.How should I troubleshoot if the light is not working?

Please ensure you're using a non-dimming switch with good contacts. Check that the cables to the light and fan are properly connected, and the wire connecting the lampshade to the housing is well inserted The fan only works with 110V.

3.How should I troubleshoot if fan seems louder than it should?

①Check the damper to ensure it opens and closes properly.②Avoid sharp bends in the duct closer than 18 inch. to the fan discharge.③Use the recommended size ducting (4-inch).④Ensure the fan and fan house screws are securely attached in place.

4.How should I troubleshoot if the fan is not effectively clearing the room?

Ensure that a door or window is slightly ajar or open to allow airflow.Confirm that the fan is vented with the correct size duct(4-inch).Confirm that the air vent and air intake is not blocked. It is recommended to use rigid or semi-rigid ducting

5.How to prevent moisture buildup?

Please avoid venting through so fit or ridge vents, as hot air drawn back into the attic through them can condense. Using insulated ducting can effectively prevent condensation when hot air from bathroom exhausts encounters cold ducts in the attic.

WARRANTY

Our warranty guarantees that the products we sell are free from manufacturing defects for a period of one (1) year from the date of purchase. We will address any issues in accordance with the termsoutlined below:

- This warranty applies to products purchased directly from us or through our authorized dealers.
- It covers defects in materials, workmanship, and malfunctions that render the product unusable.
- The warranty period is valid for one (1)year from the original date of purchase.
- Within the warranty period, we will either replace the defective product or issue a refund, at our discretion.

Notice

This warranty does not cover damages resulting from misuse, abuse, or normal wear and tear. It is non-transferable and valid only for the original purchaser.

Return Process

Damaged?
Wrong item?
Missing Parts?

Get your order information ready , photos will be very helpful.

Contact us.

Our service team will take care of your inguiries accordingly.

At last, we shall provide a suitable solution to you.