universal tubs

INSTALLATION & OPERATIONAL MANUAL

Manufactured by **SWCORP**
5701 NW 35th Avenue
Miami, Florida 33142

DIM-V3 THIS LATEST MANUAL VERSION SUPERSEDES ALL PREVIOUS VERSIONS.

DON'T WAIT! REGISTER NOW!

Register your product within 90 days to ensure your bathtub is recognized as an official purchase and is eligible for warranty coverage. Mail in the completed registry card to 5701 NW 35th Ave Miami, FL 33142 or register online at www.SWCORP.com/register.

CUT ALONG DOTTED LINE.

Product Registration Card

Name ..... Address .....

City ..... State ..... Zip .....

Phone ..... Email.....

Date of Purchase..... **Order or Purchase #**..... **SKU or Model #**.....

Installer's Name ..... Phone .....

I have read the Owner's Guide carefully and understand and agree that any installation, operation or maintenance of the bathtub must be done strictly in accordance with instructions and guidelines contained in the owner's manual and installation guide.

Signature..... **Date**.....

INSTALLATION INSTRUCTIONS & OWNER'S MANUAL

(Refer to individual model sheets for specifications)

BEFORE BEGINNING INSTALLATION, CHECK THE FOLLOWING ITEMS
AND READ THE INSTRUCTIONS CAREFULLY.

☑ **CHECK ENTIRE UNIT FOR CONCEALED DAMAGE.** If there is any damage, DO NOT INSTALL! Shipping damages must be reported to the carrier immediately. All damage must be discovered and reported prior to installation in order to have it covered under the warranty! **DAMAGE MUST BE REPORTED WITHIN 5 BUSINESS DAYS OF DELIVERY!**

☑ **COMPARE COLOR OF UNIT WITH OTHER FIXTURES.** If color is not sufficiently compatible with fixtures, DO NOT INSTALL!

PLANNING THE INSTALLATION

1. Make certain the floor structure is level and adequate to support installation. See floor loading in tub specifications.
2. Building codes require that a panel(s) be constructed to allow ample clearance for plumbing repairs and pump service or removal. (Please refer to your local codes for regulations.)
3. Using the tub itself, or installation drawings, measure and mark locations for waste pipe, water supply, wiring runs, and service access.

IMPORTANT SAFETY INSTRUCTIONS

Read and follow all instructions and save these instructions.

WARNING! Examine all plumbing for damage and water test before final installation. If damage has occurred, call our Technical Service Department at **(305) 330-1146.**

WARNING! Alterations or modifications of the plumbing system without expressed written authorization will invalidate all warranty claims.

WARNING! Installation must comply with current local and state building, plumbing, and electrical codes.

WARNING! It is the responsibility of the installer or owner to determine code requirements prior to installation.

WARNING! Connections should be made by licensed plumbers and electrician.

IMPORTANT INSTRUCTIONS:

* Do Not lift by plumbing at any time! Lift by the tub deck.
* Tub must be supported by the subfloor and bedding, not by the tub lip.
* Run pump and test all functions and plumbing prior to finishing installation.
* Run pump only when water in tub is two inches over jets.

Any modifications to the plumbing system, including the pump, will void the warranty and approvals.

READ AND FOLLOW ALL INSTRUCTIONS

1. DANGER: To reduce the risk of injury, do not permit children to use this unit unless they are closely supervised at all times.

2. Use this unit only for its intended use as described in this manual. Do not use attachments not recommended by the manufacturer.

3. Never drop or insert any object into any opening.

4. Do not operate this unit without the guard over the suction fitting.

5. The unit must be connected only to a supply circuit that is protected by a Ground-Fault Circuit Interrupter (GFCI). Such a GFCI should be provided by the installer and should be tested on a routine basis. To test the GFCI push the test button. The GFCI should interrupt power. Push the reset button. The power should be restored. If the GFCI fails to operate in this manner, there is a ground current flowing indicating the possibility of an electrical shock. Do not use this unit. Disconnect the unit and have the problem corrected by a qualified service representative before using.

6. A green colored terminal (or a wire connector marked `G', `GR', `GROUND', or `GROUNDING') is provided within the terminal compartment. To reduce the risk of electrical shock. connect this terminal or connector to the grounding terminal of your electrical service or supply panel with a continuous green insulated copper wire equivalent in size to the circuit conductors supplying the equipment. but no smaller than No.10 AWE (5.6mm)

7. A pressure wire connector on your bath is provided on the exterior of the terminal box within this unit to permit connection of a No. 8 AWE (8.4mm) solid copper bonding conductor between this unit and all electric equipment and exposed metal in the vicinity, as needed to comply with local requirements.

8. **SAVE THESE INSTRUCTIONS.**

ATTENTION

CHECK TUB FOR CONCEALED DAMAGE.

CHECK COLOR COMPATIBILITY WITH OTHER FIXTURES.

CHECK TO INSURE THAT THE BATH HAS THE PROPER COMPONENTS.

SWCORP WILL NOT BE HELD RESPONSIBLE FOR TUB DAMAGE OR COLOR COMPATIBILITY PROBLEMS AFTER WHIRLPOOL IS INSTALLED.

SWCORP WILL NOT BE HELD RESPONSIBLE FOR COST OF INSTALLATION OR REPAIR IF AN INCORRECT TUB IS INSTALLED.

READ INSTRUCTIONS BEFORE STARTING INSTALLATION.

GENERAL NOTES

CONSTRUCTION
The tub surface is made of marine grade acrylic. The substructure is a composite laminate constructed of fire retardant fillers.

ELECTRICAL
Factory wired for 110 Volt 20 Amps. Ground-Fault Circuit Interrupter (GFCI) is required. The 20 Amp GFCI breaker must not supply any other circuits or devices. If and electric heater is equiped an additional dedicated 15 amp breaker is required. An access panel must be installed to permit pump service.

The unit must be connected only to a supply circuit that is protected by a Ground-Fault Circut Interrupter (GFCI). Such a GFCI should be provided by the installer and should be tested on a routine basis.To test the GFCI push the test button. The GFCI should interrupt power. Push the reset button. The power should be restored. If the GFCI fails to operate in this manner, there is a ground current flowing indicating the possibility of an electrical shock. **(See schematic on Pg. 5)**

ELECTRICAL ROUGH-IN
WARNING: When using electrical products basic precautions should always be followed including the following: Rough-in wiring to equipment on a Ground-Fault Circuit Interrupter (GFCI). The GFCI circuit breaker must not supply any other devices or circuits. An access panel must be installed to permit pump service.

WARNING: Failure to follow instructions exposes users to risk of electrical shock or fire.

PLUMBING ROUGH-IN
The bath waste pipe protrudes below the base approximately one inch. Provide supply pipe, rough-in waste and vent per local code.

NOTE: On some models, the pump may exceed beyond the perimeter of the tub. If you have such a model, please make allowance during installation. **See Page 4.**

BATH WASTE AND OVERFLOW
Read instructions enclosed with bath waste drain for proper setting and fitting. Water tight installation of the drain is the installer's responsibility. The waste and overflow is not included with the tubs unless purchased as an option. if not purchased with the tub, you must supply and install an alternative.

TESTING
Inspecting the unit prior to installation is the responsibility of the installer or building contractor who acts on behalf of the user. They are responsible for ensuring the unit is free of defect or damage. In the event of a problem, the unit must not be installed. SWCORP is not responsible for failures or damage that could have been discovered, repaired, or avoided by proper inspection and testing prior to installation.

INSTALLATION

PROTECTION OF TUB
Use a section of the box, cut to size, and place in the bottom of the tub. When possible, keep the box cover over the tub. These steps will help protect the tub from abrasion or damage during installation.

IMPORTANT: If installing a skirt with removable panel, read instructions for the skirt prior to rough-in. The instructions are located in the box with the skirt.

SETTING TUB IN PLACE
The tub needs to be set in mortar or plaster to level tub and prevent shifting after installation.
Apply mortar to the floor area that makes contact with the tub base. Set tub in opening and push on bottom of tub to secure in mortar. **TUB MUST NOT "HANG" FROM LIP OF TUB!** Do not allow tub lip and edges bear any weight of the tub. Do not fill tub with water until mortar has hardened. Seal all joints with sanitary silicone.

Alcove Installation
Set tub in place and level. Install leveling strips to the under side of tub lip Do not hang tub by leveling strips. Set tub in mortar and allow to dry.

FINISHING
Before finishing with your choice of material, make sure access entries are available to the pump, bath waste pipe, and plumbing fixtures. Finish as desired and seal around tub, preferably with sanitary silicone.

CLEAN PUMP SYSTEM
After tub is installed and ready to use, remove all construction debris and clean the pump and system.

SUGGESTION: During construction, we suggest that you cover tub to avoid use as trash receptacle.

IT IS THE INSTALLERS RESPONSIBILITY TO SUPPLY ACCESS TO PUMP AND EQUIPMENT.

1. Once the tub is leveled, the tub must be supported or stabilized with plaster or mortar. If the tub has a supporting base, then mortar is not required.
2. For Caulking, we recommend 100% sanitary silicone rather than latex.
3. For quieter operation, you may choose to insulate the surrounding.

NOTE: ALL TUBS ARE FACTORY TESTED FOR PROPER WATERTIGHT OPERATION. However, the tub must be filled with water to check for leaks that may have resulted from handling, before finishing the tub installation. SWCORP is not responsible for any defects that could have been discovered, repaired or avoided by following this testing and inspection procedure.

INSTALLING ONE-PIECE SKIRT

IMPORTANT - Read these instructions prior to roughing in bath tub. Fasten 3 wooden blocks to the floor (see Fig. 1).

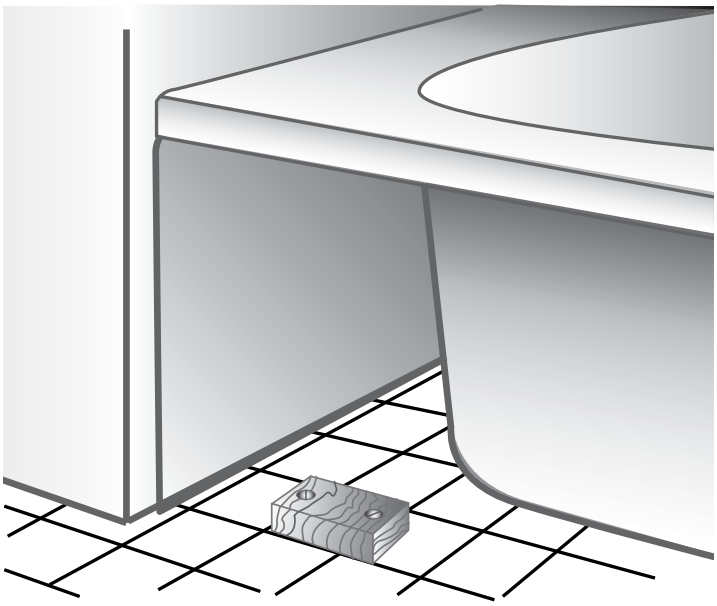

Fig. 1

Taking into consideration the shape of the skirt, which should result in a plumb position to the tub, perpendicular to the floor (see Fig. 2). If the skirt needs to be trimmed at bottom, or from the side, you can do so by cutting with a circular saw (carbide or diamond tipped). Secure in place at the bottom by attaching screws through the panel in the wood blocks or with sanitary silicone.

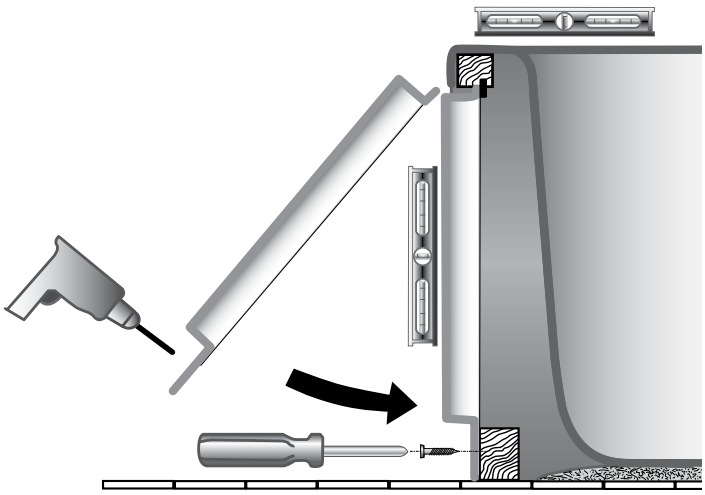

Fig. 2

PLUMBING ROUGH-IN

The bath waste opening protrudes below the base approximately one inch. You may be required to cut a hole in the subfloor to accommodate bath waste. In slab on grade or prestressed concrete floors where cutting is not desired, the tub may be raised up by building the platform higher and using extra mortar under the tub. If a joist must be notched, verify that structure will not be weakened. Remove only what is necessary. Provide supply pipe, rough-in waste and vent per code.

PLUMBING

PVC Schedule 40 piping, self draining pump and fittings come completely preplumbed unless requested otherwise. The pump and whirlpool system are completely contained within the tub perimeter. On some models, the pump may exceed beyond the perimeter of the tub. If you have such a model, please make allowances during installation.

INCOMING POWER

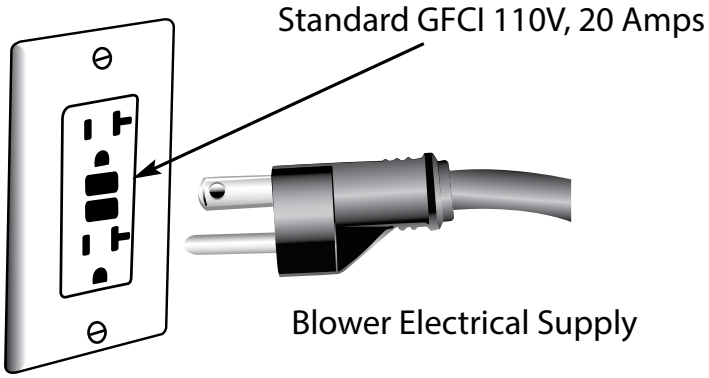

ELECTRICAL

Factory wired for 110 Volt 20 Amps. Ground Fault Circuit Interrupter (GFCI) is required. The GFCI breaker must not supply any other circuits or devices.

FINISHING

Before finishing with your choice of material, make sure access entries are available to the pump, bath waste, and plumbing fixtures. Finish as desired and seal around tub, preferably with silicone.

NOTE:

1. For Caulking, we recommend 100% sanitary silicone rather than latex.
2. For quieter operation, you may choose to insulate the construction area.
3. IT IS THE INSTALLERS RESPONSIBILITY TO SUPPLY ACCESS TO PUMP AND EQUIPMENT

REMINDER: During construction, we suggest that you cover tub to avoid use as trash receptacle

ATLANTIS TOUCH PLUS
START UP AND OPERATIONAL INSTRUCTIONS

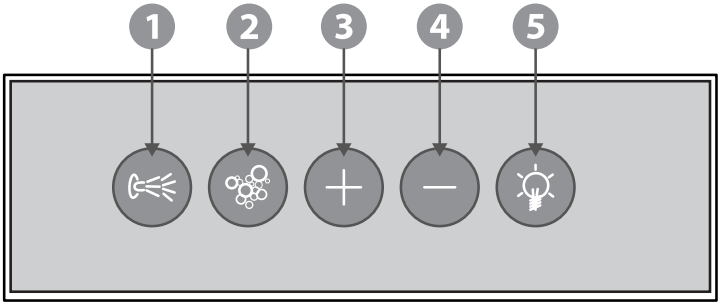

Purge Cycle:
There are two different purges: The first at 30 minutes after the tub is used and the second every 24 hours at the time determined by when power is turned on at the breaker box.

1. **Pump On/Off:**
   1st Press - the pump starts
   2nd Press - the pump stops
2. **Blower On/Off:**
   1st Press - the blower starts
   2nd Press - the blower stops
3. **Air Jet Speed (INCREASE)**
4. **Air Jet Speed (DECREASE)**
5. **Light Button:**
   1st Press - turn on light
   2nd Press & Hold - turn off light

Cycling Colors - When turned on, Chromalight will be in Cycle Mode where the colors will slowly cycle from one to the next. To manually select your desired color, press the button again and again until the desired color is reached. It will stay on this color until turned off.

120V/60Hz Variable Blower & On/Off Pump

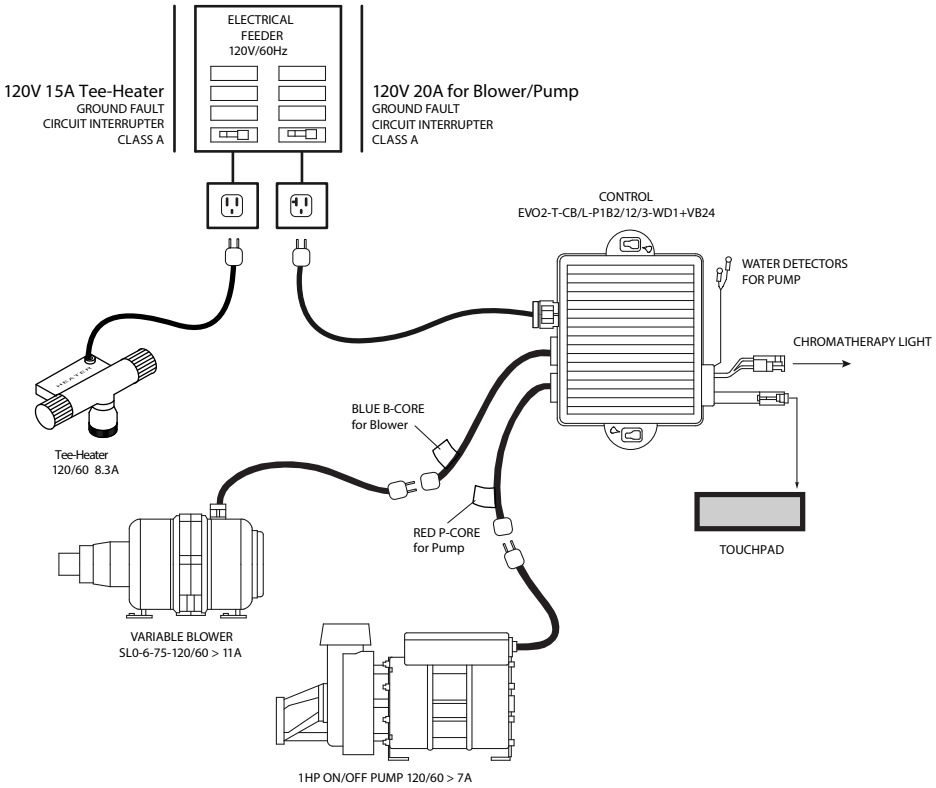

TYPICAL INSTALLATIONS

Make absolutely certain that access panels and/or service openings are properly placed and that all possible areas where service may be required are accessible.

TUB TO BE SUPPORTED BY THE SUPPORT BASE AND BEDDING, NOT BY THE LIP OF TUB

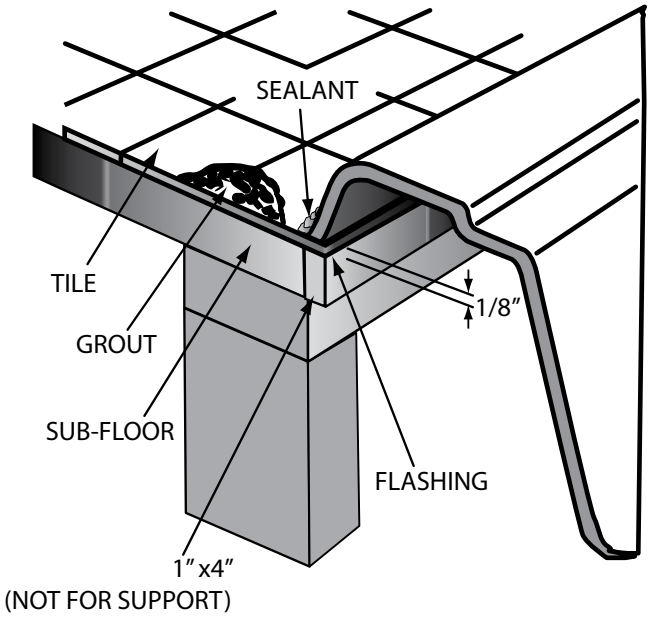

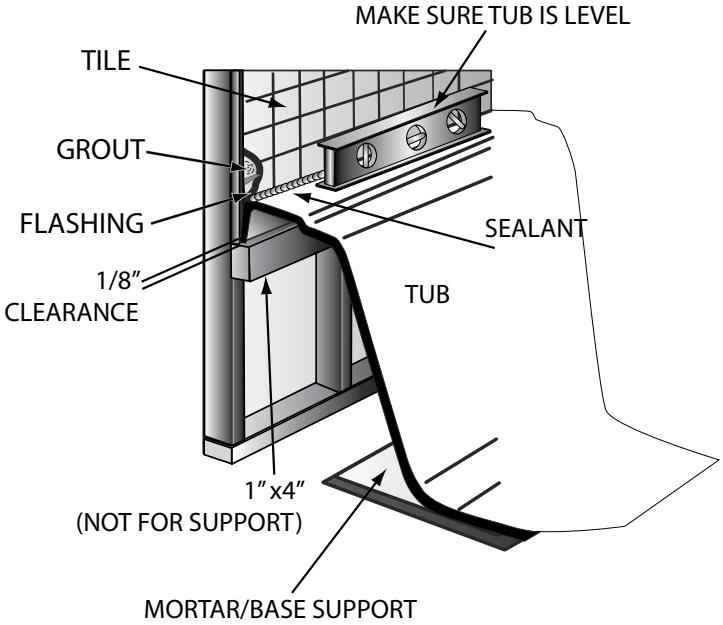

Note: For caulking, we highly recommend using 100% silicone rather than a latex silicone because it keeps its elasticity and does not deteriorate.

FOR A QUIETER WHIRLPOOL, WE SUGGEST:

a. Insulate the surround.
b. Set tub in mortar.

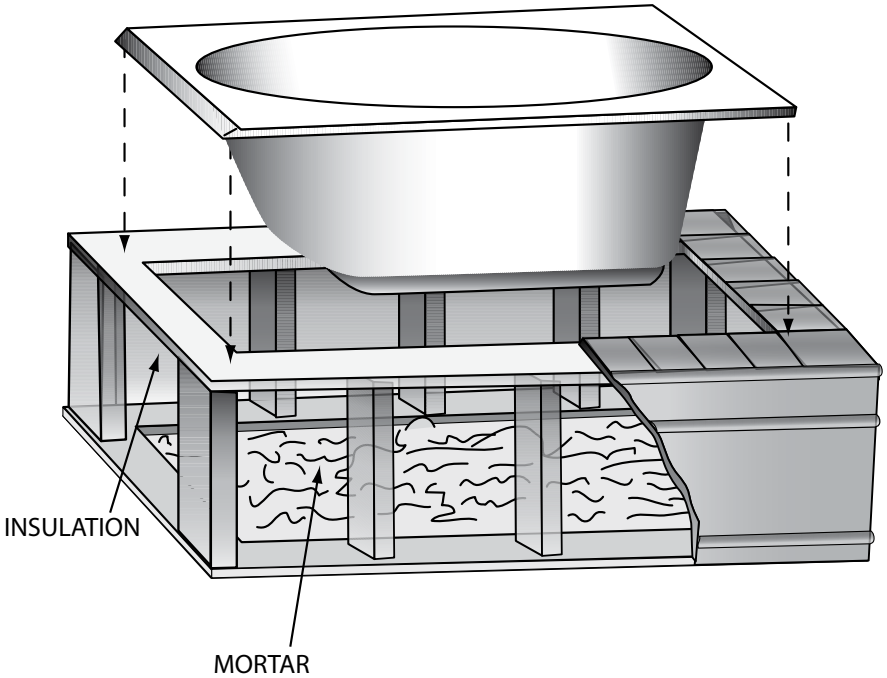

ACCESS SKIRT FOR ALCOVE INSTALLATION (IF INSTALLED)

Custom fitted skirt ensembles are available to provide the perfect finish for your bath and bathroom. All five (5) foot and six (6) foot rectangular models can be fitted with a two piece removable front skirt.

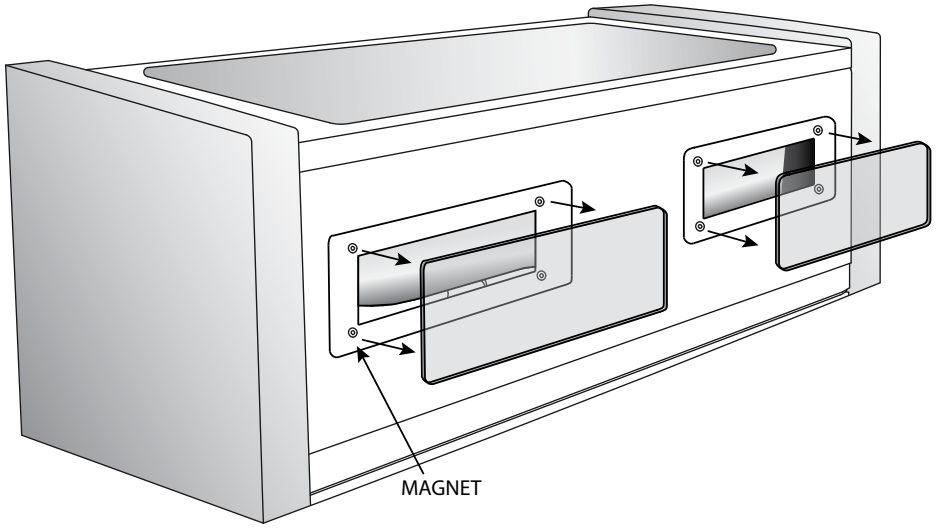

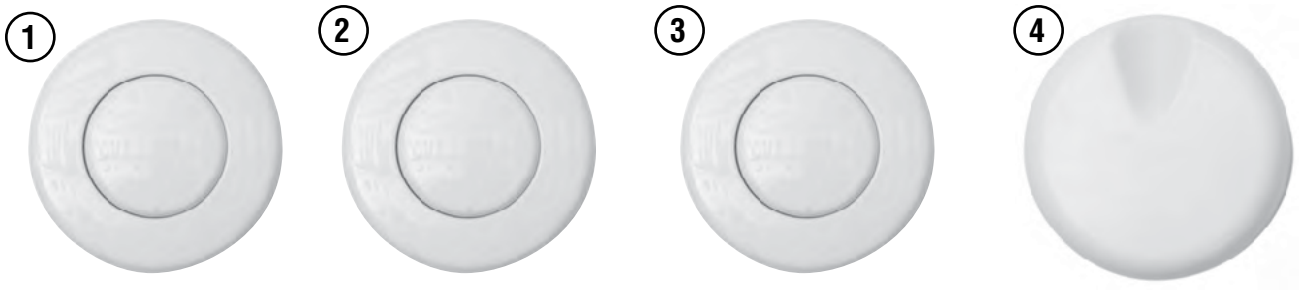

1 HYDRO CONTROL (PUMP)

Used to turn the water jets **ON** and **OFF**.
FOR TUBS WITH WATER JET OPTION.

2 AIR CONTROL (BLOWER)

Used to turn the air jets **ON** and **OFF**.
FOR TUBS WITH AIR JET OPTION.

3 CHROMATHERAPY LIGHT

PRESS ONCE (when light is OFF) - Turns light ON in Auto-Cycle Mode which will slowly transition from color to color.

PRESS TWICE (when light is ON)- Turns on static, non-changing color mode. Continue to press twice to move on to the next color until you find your desired choice.

PRESS ONCE (when light is ON) - Turns off light. Resets cycle after 2 second pause.
FOR TUBS WITH CHROMATHERAPY LIGHT OPTION.

4 HYDRO JET FLOW CONTROL

Used to increase or decrease air pressure flowing through the water jets. NOTE: On most bath tub models there are two hydro jet flow control knobs. Each knob is located on opposite sides of the tub as each knob controls it's respective half of the hydro jets. FOR TUBS WITH WATER JET OPTION.

INSTALLATION CONTINUED

Safety Suction
Inlet that allows water to return to pump (standard on all models). If suction is blocked, the pump will automatically shutdown.

Star Jet
Allows user to adjust the direction pressure, by timing clock wise open flow, counter clockwise close flow.

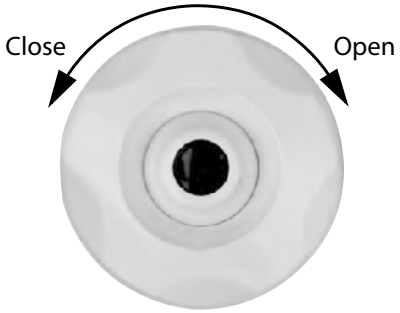

H.E.E.T. (if equipped)
Maintains water temperature without a heater using kinetic energy of the water pump.

Chromatherapy (if equipped)
Specially designed underwater LED lights will enhance your mood upon illumination.

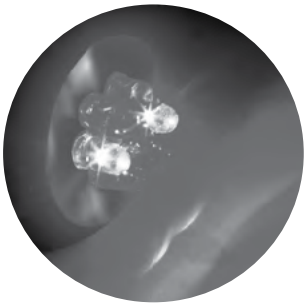

Aromatherapy (if equipped)
Open the aroma canister, drop in your favorite fragrance - turn on the blower system and you will experience an immediate sense of aromatic bliss.

O_3 OZone (if equipped)
An O3 ozonator is an automatic device that produces ozone to safely and effectively sanitize your bath while in use. Available on whirlpool and combination systems.

CAUTION

USER SHOULD periodically flush operating system (not to exceed 90 days). As a minimum, shall consist of filling and running system and draining. SWCORP recommends flushing with a mild solution of water and sanitizer such as chlorine or other commercially available whirlpool bath flushing products.

DO NOT use abrasives. They may dull or scratch surface of the acrylic.

DO NOT use oil based solvents. Clean with only a damp cloth or mild detergent or any common glass cleaner.

DO NOT use bubble bath while the whirlpool is operating.

DO NOT turn on pump without water in the bathtub. To do so may cause damage to the pump.

DO NOT alter the position of the pump. To do so may void your warranty.

NOTE: Caustic drain openers will damage the surface and the pump! Extreme heat from portable heaters and cigarettes can damage the surface of the tub. **DO NOT USE OIL BASED BATH ADDITIVES.**

FOR MINOR SCRATCHES

The procedure to remove light surface scratches or burnish marks is quite easy. Simply apply rubbing compound to the affected area and buff lightly. Then apply paste wax and gently buff again to return the original shine.

CLEANING RECOMMENDATIONS

To clean the pipes and pump:

Fill the tub and pour a cup of bleach (or dishwasher soap [i.e. Cascade] if bleach is not available), run pump for five (5) minutes and let it sit for ten (10) minutes. Run the pump for five (5) minutes, then rinse two (2) times. Wipe off the surface after the rinse because the bleach may discolor some color trimmings.

After using bleach or dishwasher soap, you should follow this cleaning procedure:

Fill the tub with water and run the pump for 5 minutes, then rinse it 2 times. Clean with a soft damp cloth, do not use abrasive cleaners as they may scratch and dull surface of the unit.

To clean the pipes and pump:

Simple but effective, offering you complete peace of mind. Simply dilute a small amount of water with any household antibacterial cleaning agent, drop it into the aromatherapy dispenser, activate the pump and your tub is cleaned and sanitized. Also purge cycle at 30 minutes after tub is use, another every 24 hours. Standard with Air Tub.

PRECAUTION

HEAT STROKE - The most susceptible people are very young, the elderly, alcoholics, and most people under the influence of drugs.

SYMPTOMS - Hypothermia causes loss of salt, sweating, ordinary dizziness, headache, dryness of the mouth, nausea, faintness and/or unconsciousness, convulsions, flushed appearance of the skin and rapid pulse, and/or weak or shallow breathing.

TREATMENT - Place on back, head slightly elevated, apply wet cloths or ice to the head, wrap body in sheet while pouring on small amounts of water, cool shower or bath, and get medical attention as soon as possible.

TROUBLESHOOTING

PROBLEM	SOLUTION
Pump not starting	Check wiring; Check the on/off switch; Check water level; Reset GFI at outlet.
Pump humming but not priming	Air trapped in line; Check for clogged jets. Add water, may have to open top union.
Pump not moving water	Possible obstruction in impeller. Possible frozen clutch (requires replacement).
No jet pressure	Clogged jet; air control not open; jet not open; missing part in jet.
Leak in plumbing	Call Tech Service: 866-588-8008

LIMITED WARRANTY COVERAGE
READ CAREFULLY, THE WARRANTY APPLIES ONLY TO ORIGINAL OWNER

10 YEARS STRUCTURAL

BATH SHELL: SWCORP warrants its bath shells against loss of water through the fiberglass laminate of the tub body as a result of a defect in materials and workmanship, for a period of ten (10) years from the purchase date.

10 YEARS SURFACE

The acrylic surface is warranted against blistering, cracking and chipping resulting from a defect in the acrylic surface material for a period of ten (10) years from the purchase date. Any scratches or surface level damage must be reported within 5 business days of delivery date. **ONCE TUB IS INSTALLED SCRATCHES ARE NOT COVERED UNDER WARRANTY.**

1 YEAR PUMP • 1 YEAR BLOWER • 1 YEAR PARTS PLUMBING AND EQUIPMENT

SWCORP warrants factory installed plumbing parts and fittings, and electrical components to be free from defect in materials and workmanship for a period of one (1) years from the purchase date, a period of one (1) years from the purchase date for the pump, and a period of one (1) years from the purchase date for the blower.

EXTENT OF WARRANTY/RESPONSIBILITY OF PURCHASER

This warranty applies only to original purchaser of the SWCORP. Bathtub must be registered with 90 days of delivery date to activate warranty. To register fill out the registration card in the manual and mail it to 5701 NW 35th Avenue Miami, FL 33142. Or, register online at www.SWCORP.com/register. Original purchaser must establish, by dated sales slip, invoice or delivery receipt, the date of purchase. The warranty applies to SWCORP manufactured after October 1, 2010.

WARRANTY PERFORMANCE

In the event of any defect in workmanship or materials covered under the terms of the “Bath Shell” warranty, SWCORP will repair the defect and will be responsible for the labor cost incurred by its agent in doing so. Travel, trip or mileage costs incurred by the authorized agents are not covered under this warranty. SWCORP, at its sole discretion, may elect to replace the defective bath. All costs involved in replacing the unit are not covered under this warranty.

In the event of any malfunction or defect covered under the terms of the “Plumbing and Equipment” warranty, SWCORP will repair or replace the defective item for a period of one (1) years from the purchase date for parts, a period of one (1) years from the purchase date for the pump, a period of one (1) years from the purchase date for the blower. **Labor cost to repair an SWCORP is covered for a period of ninety (90) days, and must be performed by an certified contractor or installer.** The purchaser is responsible to provide adequate access to the equipment and plumbing. **Any labor costs attributed to removing decking or any other obstacle to gain easy access to the equipment or plumbing are not covered. Travel, trip or mileage costs incurred by servive technician for in-home service are not covered under this warranty.**

Written notice of any malfunction or defect must be given within ten (10) business days of the time it is discovered, to SWCORP, 5701 NW 35th Avenue, Miami, Florida 33142. SWCORP reserves the right to inspect the malfunction or defect on location.

RESPONSIBILITIES OF OTHERS

Inspecting the unit prior to installation is the responsibility of the installer or building contractor who acts on behalf of the user. They are responsible for ensuring the unit is free of defect or damage. Notices are placed on and in the unit and on the shipping carton advising the installer of this responsibility. In the event of a problem, the unit must not be installed. SWCORP is not responsible for failures or damage that could have been discovered, repaired, or avoided by proper inspection and testing prior to installation.

Damage occurring in transit is the responsibility of the carrier. The user or installer MUST open the crate and inspect the unit for damage when it is delivered. If damage is discovered, THE TUB MUST NOT BE INSTALLED, and damages must be reported to the manufacturer within 5 business days of delivery.

LIMITATIONS AND EXCLUSIONS

This warranty does not cover any claim arising from abuse, misuse, negligence, accident, improper installation or operations on the part of the purchaser or installer. This warranty is void if the SWCORP is subject to alteration, or if repairs are attempted by anyone other than an authorized agent of SWCORP. This warranty does not extend to plumbing or components installed by dealers, installers or by any party other than SWCORP.

SWCORP will not be liable for loss of use of the product, inconvenience, or any other incidental or consequential costs, expense or damages. Please note that some states do not allow the exclusion or limitation of incidental damages. Additionally, this warranty does not cover discontinued or display products.

DISCLAIMER

Except as expressly provided, there shall be no warranty or obligation, express or implied, oral or statutory. No dealer or other person has the authority to make any warranties or representations concerning SWCORP or its products. In no event shall SWCORP be held responsible for any such warranties or representations.

OTHER RIGHTS

This warranty gives you specific legal rights, and you may have other rights which may vary from state to state.

TECHNICAL SERVICE

Contact the retail seller or the local authorized warranty service center. If you do not know who your local representatives are, contact SWCORP Service Department at the address listed below, or call (**305) 330-1146.**

Tel: 1-866-588-8008 / Fax: 1-866-560-1060
www.SWCORP.com / info@swcorp.com
5701 NW 35 Avenue, Miami, FL, 33142

This warranty is in effect as of May, 2019. This warranty supersedes all previous warranties and/or claims both stated and implied. This warranty is subject to change without notice.

NOTES

SWCORP™

LUXURY HOME BRANDS

IMPORTANT: READ AND SAVE THESE INSTRUCTIONS.

INSTALLER: SAVE INSTALLATION INSTRUCTIONS WITH HOMEOWNER

HOMEOWNER: KEEP INSTALLATION INSTRUCTIONS FOR FUTURE REFERENCE

Please leave owner's manual with warranty.
If you have any problems or questions during installation,
please call technical service at

(305) 330-1146

Record the numbers here for handy reference:

Model No. _____

Serial No. _____

Date of Purchase _____

MADE IN U.S.A.

Manufactured by
SWCORP
5701 NW 35th Avenue
Miami, Florida 33142
Ph: (305) 330-1146 • Fax: 1-866-560-1060
Email: info@swcorp.com
Visit: www.SWCORP.com