ASSEMBLY INSTRUCTIONS
30 INCHES BATH VANITY (COMBO)

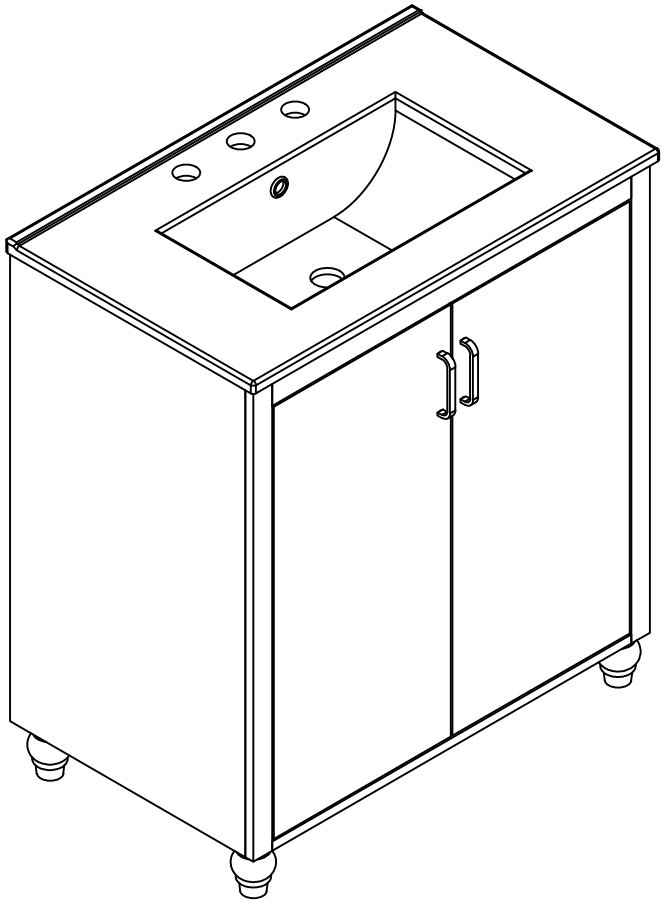

Thank you for purchasing this quality product. Be sure to check all pact material carefully for small parts which may have come loose inside carton during shipment. Separate, identify and count all parts and hardware Compare with the parts list to be sure all parts are present,
"DO NOT TIGHTEN SCREWS UNTIL COMPLETELY ASSEMBLED"

*** Use of power tool to assemble this product will invalidate any claim and damage this product making unsafe !!!**
*** Please assemble on a clean soft surface to avoid damage.**

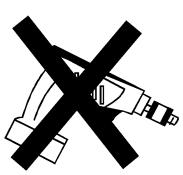

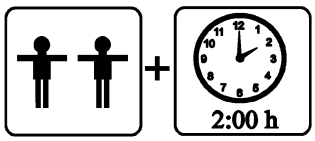

Tools Required

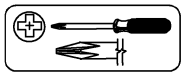

(Not included)

IMPORTANT:
PLEASE READ INSTRUCTION BEFORE STARTING THE ASSEMBLY

Before Installtion

Important - Please read these instructions fully before starting assembly

Thank you for purchasing this quality product. Be sure to check all packing materials carefully for small parts, which may have come loose inside the carton during shipment. Identify and count all items according to the PARTS LIST and/or HARDWARE LIST shown below. Check you have all the components and tools listed on the following pages.

. We recommend that you assemble this product with the assistance of another person; this will make the assembly easier, and will help eliminate damage to the product or injury to persons during assembly.

. Please do not over tighten screws or bolts until the assembly is completed.

. Keep children and animal away from the work area, small parts could choke if swallowed.

. Please put all parts on a non-abrasive floor before assembly, and follow the assembly steps to assemble your newly purchased product correctly and efficently.

If you find that you have any trouble with assembly or missing or damaged parts please contact the seller.

Cam Lock Assembly Instructions

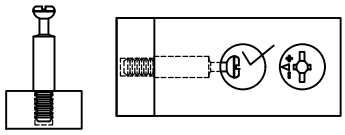	Insert Cam Bolt into hole as shown in diagram A.
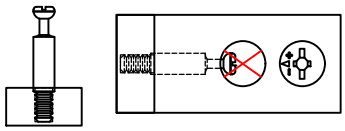	Make sure not to insert the Cam Bolt. Too deep as shown in figure B as this will cause the Cam Lock to be misaligned and unable to interlock properly.
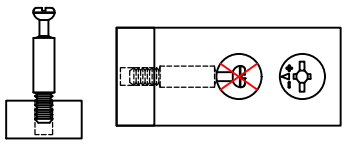	Also avoid inserting the Cam Bolt too close to the surface of the hole as shown in figure C, as this will cause the Cam Lock to be too loose, and not interlock properly.
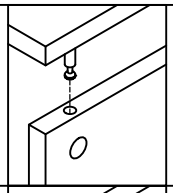	Connect the panels together.
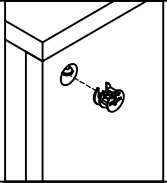 	Insert the Cam Lock so the side opening fits over the head of the Cam Bolt.
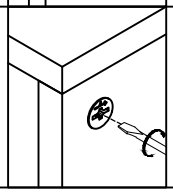	To tighten the Cam Lock, turn it clockwise on half a turn with a flat screwdriver. **Do not use an automatic screwdriver as it may bend or break if too much power is imposed.*

PRODUCT DETAILS

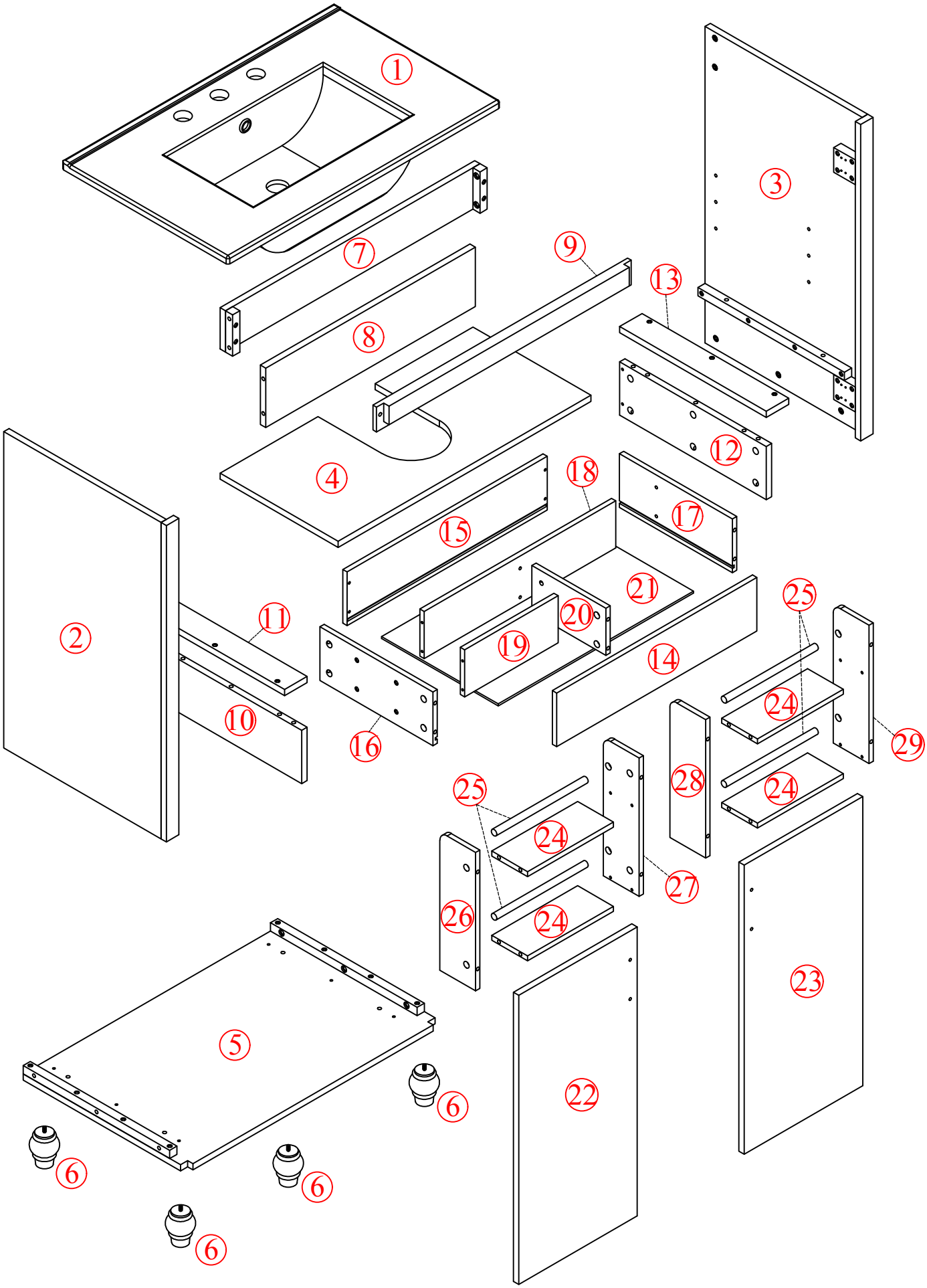

PART LIST

①	SINK (LAVABO)	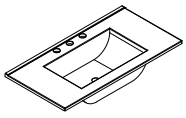	1 PC	⑯ DRAWER SIDE LEFT	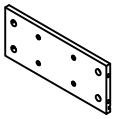 1 PC
②	LEFT FRAME	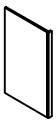	1 PC	⑰ DRAWER SIDE RIGHT	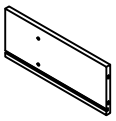 1 PC
③	RIGHT FRAME	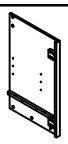	1 PC	⑱ DRAWER MIDDLE 1	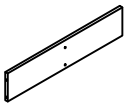 1 PC
④	SHELF PANEL	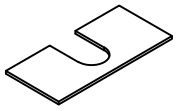	1 PC	⑲ DRAWER MIDDLE 2	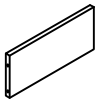 1 PC
⑤	BOTTOM BASE	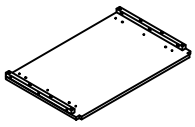	1 PC	⑳ DRAWER MIDDLE 3	 1 PC
⑥	LEGS		4 PCS	㉑ DRAWER BOTTOM	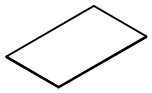 1 PC
⑦	TOP BACK PANEL	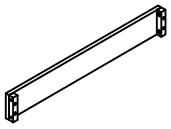	1 PC	㉒ LEFT DOOR	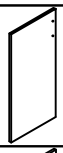 1 PC
⑧	LOWER BACK PANEL	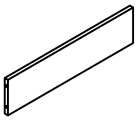	1 PC	㉓ RIGHT DOOR	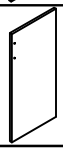 1 PC
⑨	FRONT PANEL	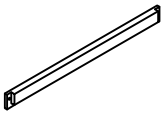	1 PC	㉔ BOTTOM SHELF DOOR	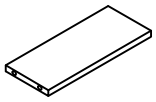 4 PCS
⑩	LOWER LEFT PANEL	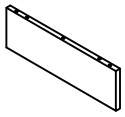	1 PC	㉕ PULL BAR SHELF DOOR	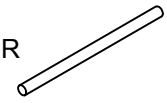 4 PCS
⑪	LEFT PANEL	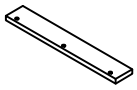	1 PC	㉖ LEFT STAND SHELF -LEFT DOOR	 1 PC
⑫	LOWER RIGHT PANEL	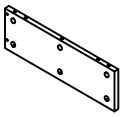	1 PC	㉗ RIGHT STAND SHELF -LEFT DOOR	 1 PC
⑬	RIGHT PANEL	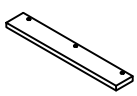	1 PC	㉘ LEFT STAND SHELF -RIGHT DOOR	 1 PC
⑭	DRAWER FRONT	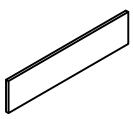	1 PC	㉙ RIGHT STAND SHELF -RIGHT DOOR	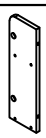 1 PC
⑮	DRAWER BACK	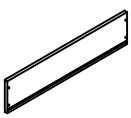	1 PC		

HARDWARE LIST

Ⓐ	A1: D30MM A2: D30MM		2 SETS	Ⓛ	Ø35MM	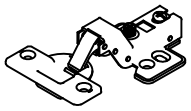	4 PCS
Ⓑ	3.5*10MM		12 PCS	Ⓜ	3.5*15MM	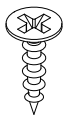	24 PCS
Ⓒ	Ø8*30MM		12 PCS	Ⓝ	M4*30MM	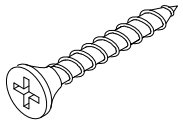	6 PCS
Ⓓ	Ø5*35MM		50 PCS	Ⓞ	L 15MM	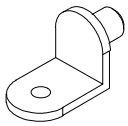	4 PCS
Ⓔ	Ø15*10MM		50 PCS	Ⓟ	3.5*12MM	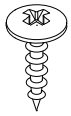	4 PCS
Ⓕ	M6*25MM	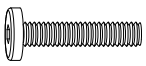	10 PCS	Ⓠ	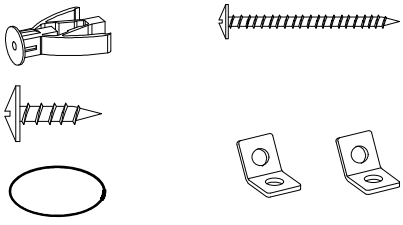	2 SETS
Ⓖ	M6*15MM	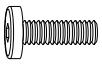	2 PCS				
Ⓗ	L 100MM	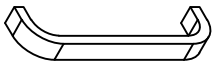	2 PCS	Ⓡ	L 4*58MM	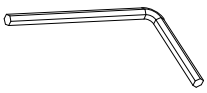	1 PC
Ⓘ	M4*20MM		4 PCS				
Ⓙ	M4*50MM	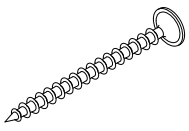	10 PCS				
Ⓚ	Ø10*10MM		10 PCS				

ASSEMBLY TOOLS REQUIRED (NOT INCLUDED)

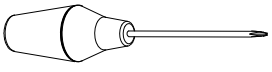

STEP 1

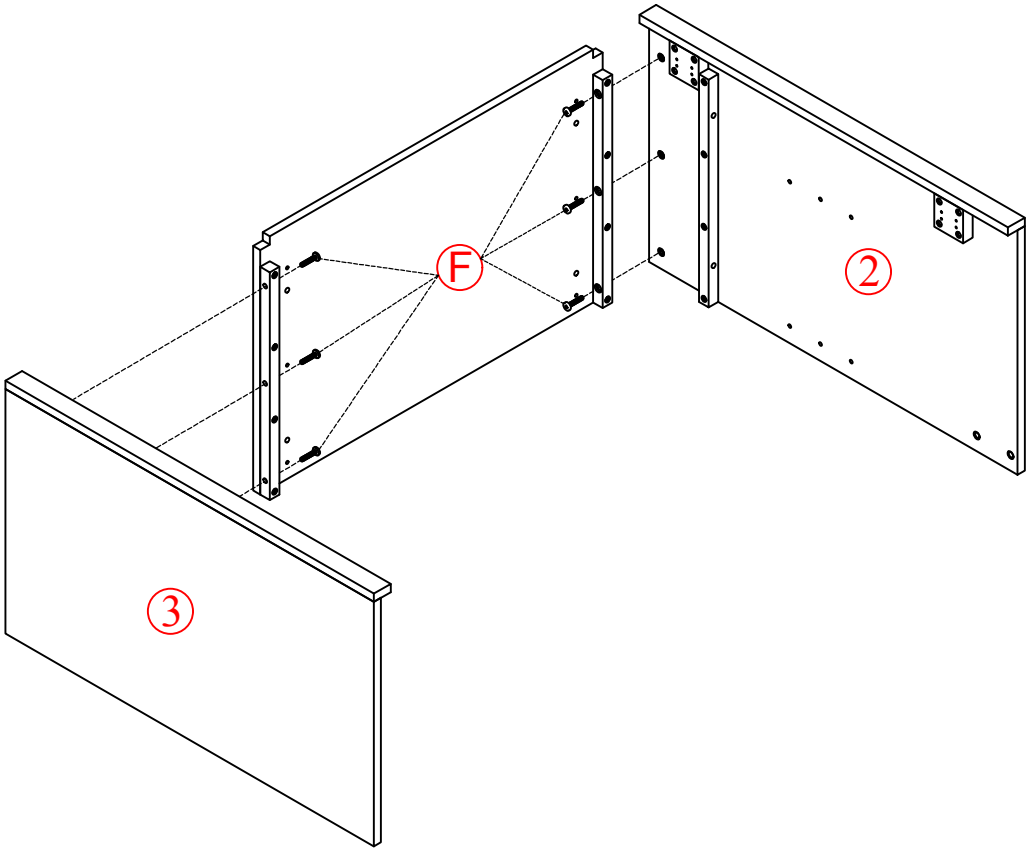

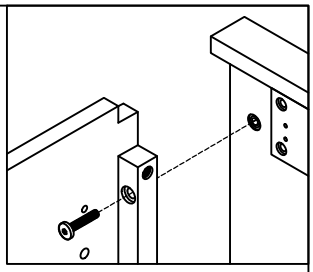

F	M6*25MM		6PCS

STEP 2

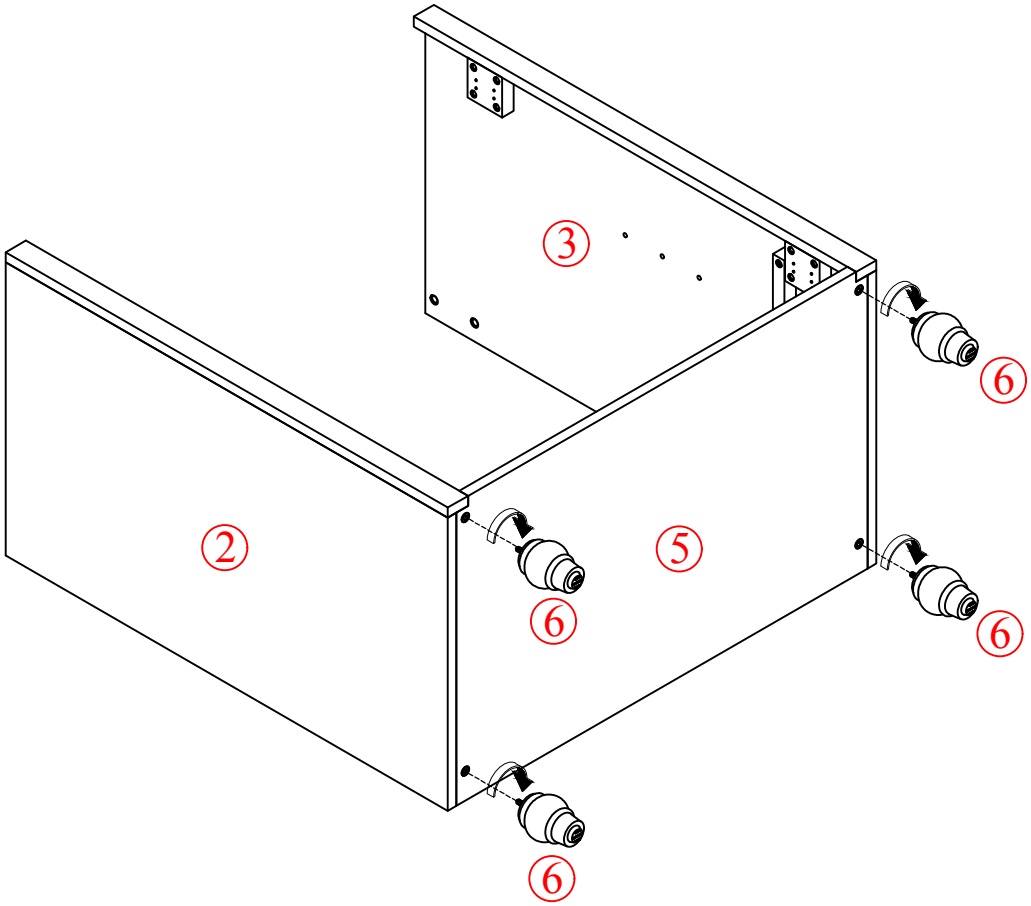

STEP 3

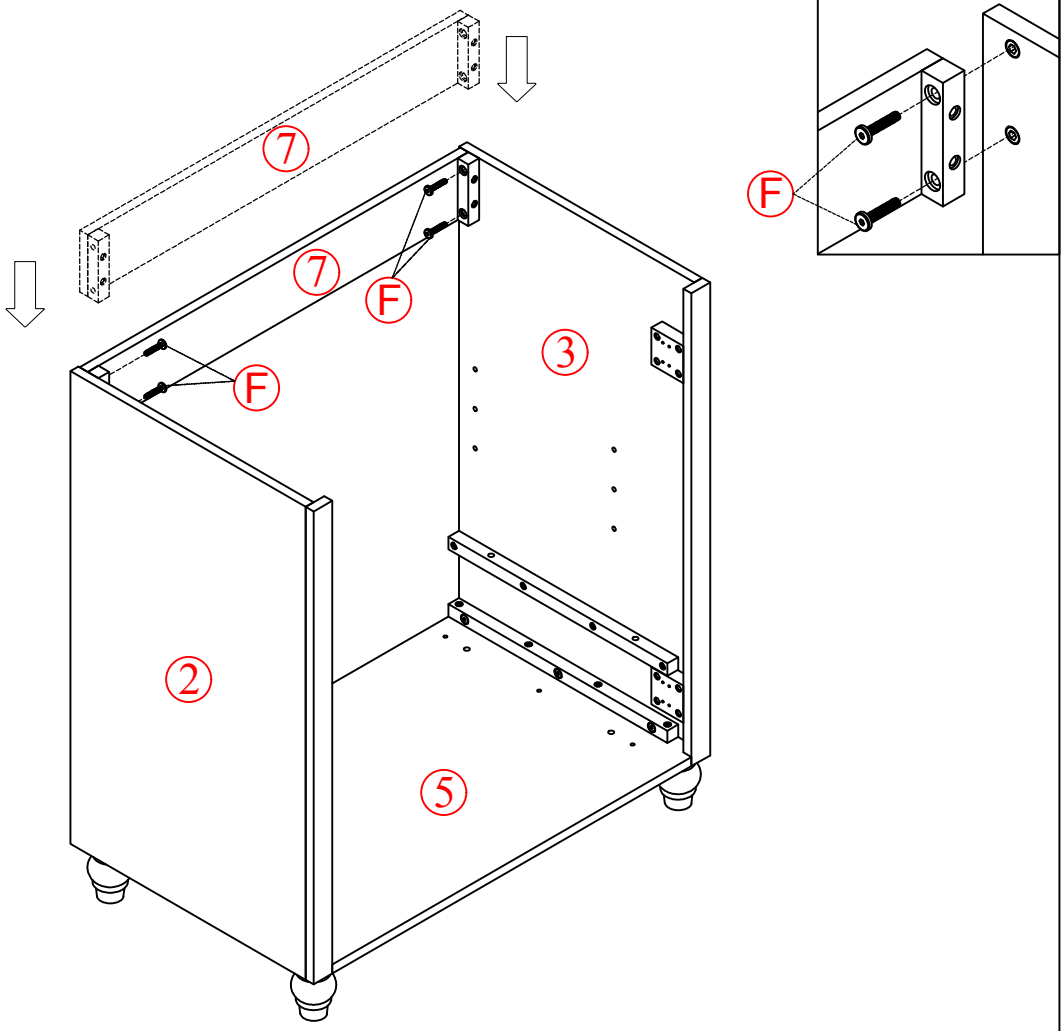

F	M6*25MM		4PCS

STEP 4

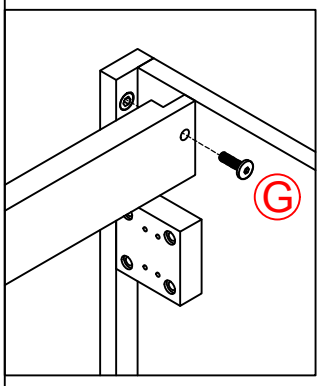

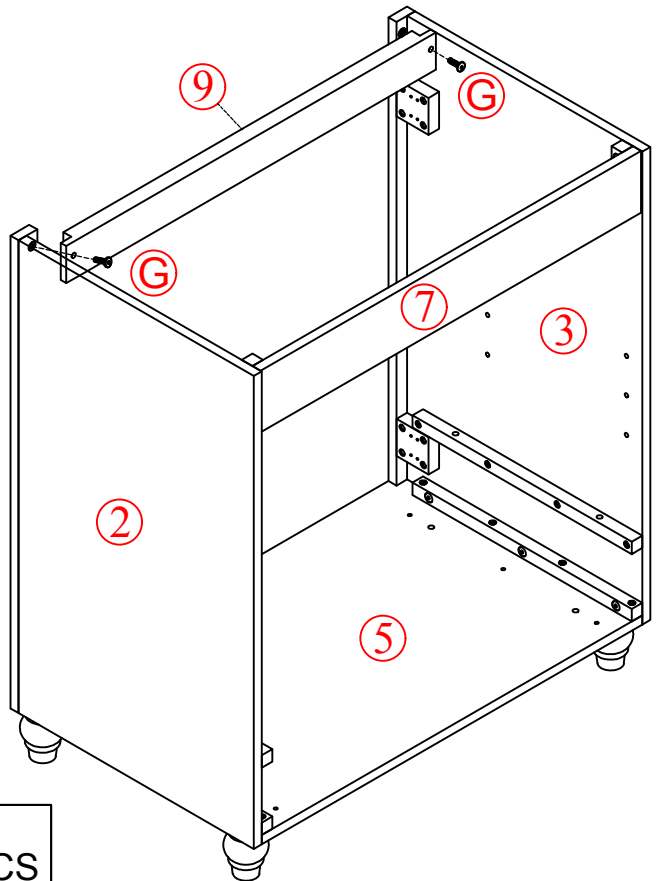

G	M6*15MM	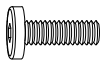	2PCS

STEP 5

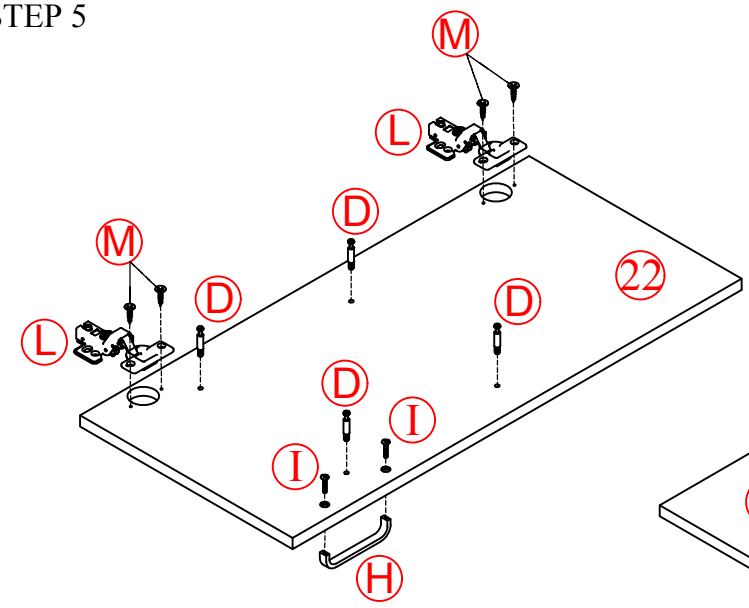

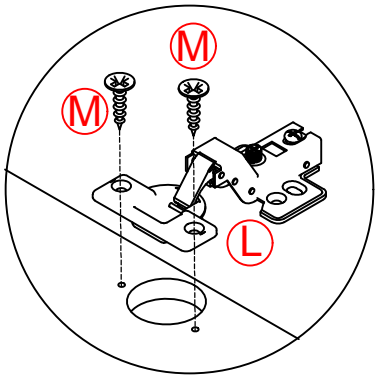

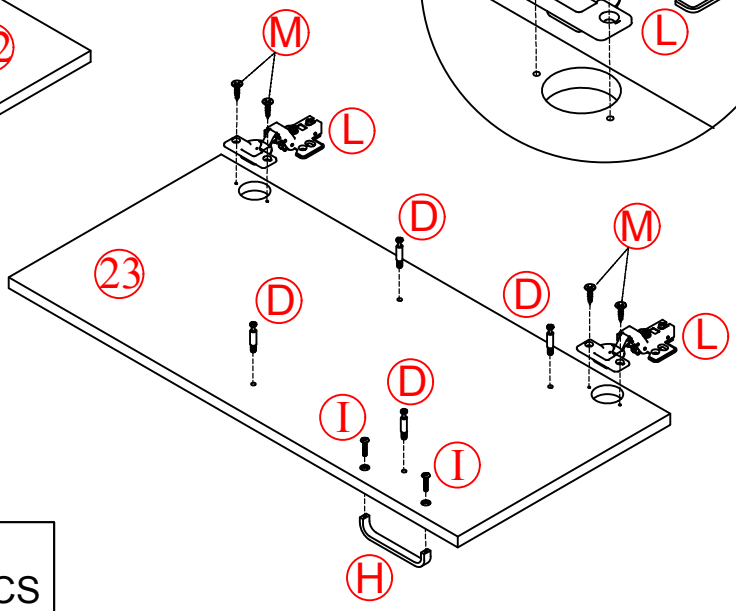

D	Ø5*35MM		8PCS
L	Ø35	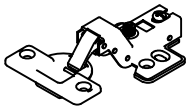	4PCS
H	L 100MM	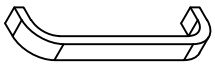	2PCS

M	3.5*15MM		8PCS
I	M4*20MM		4PCS

STEP 6

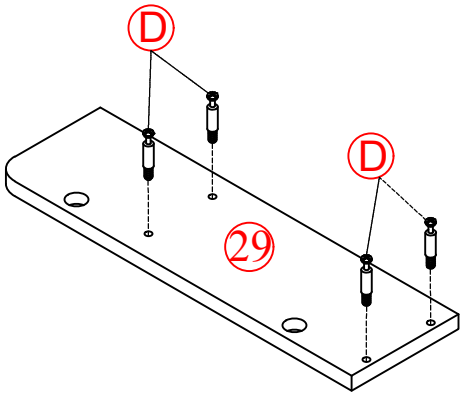

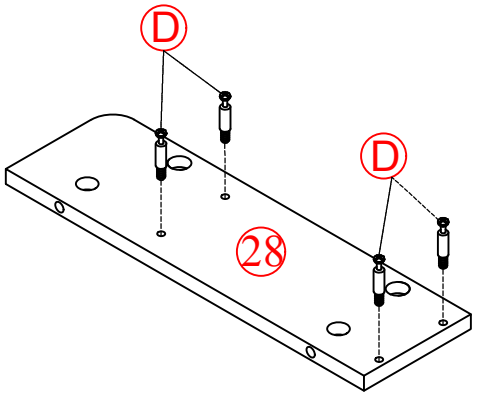

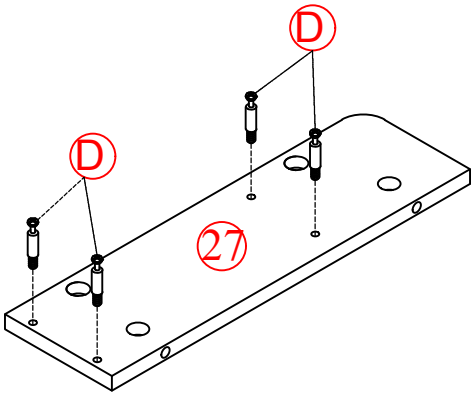

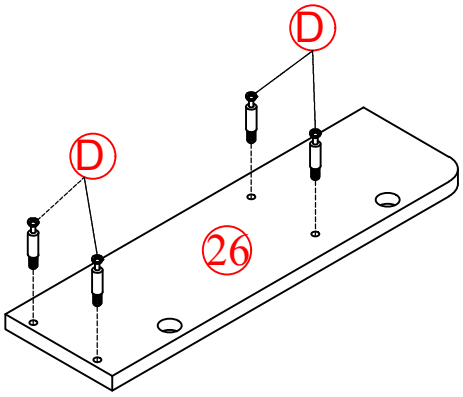

D	Ø5*35MM		16PCS

STEP 7

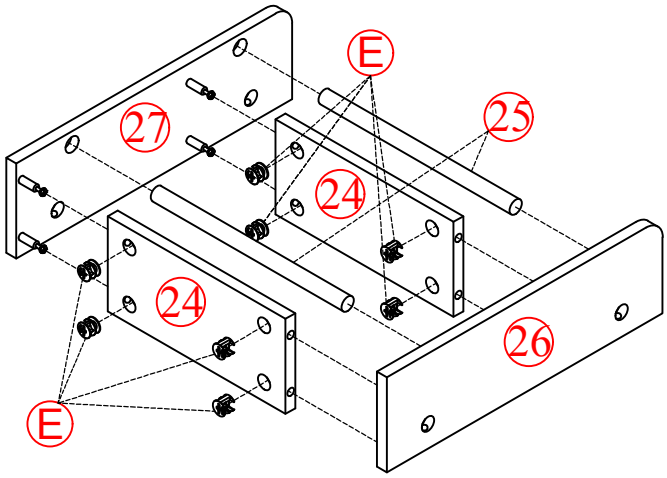

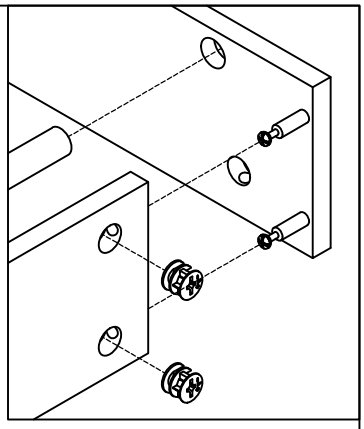

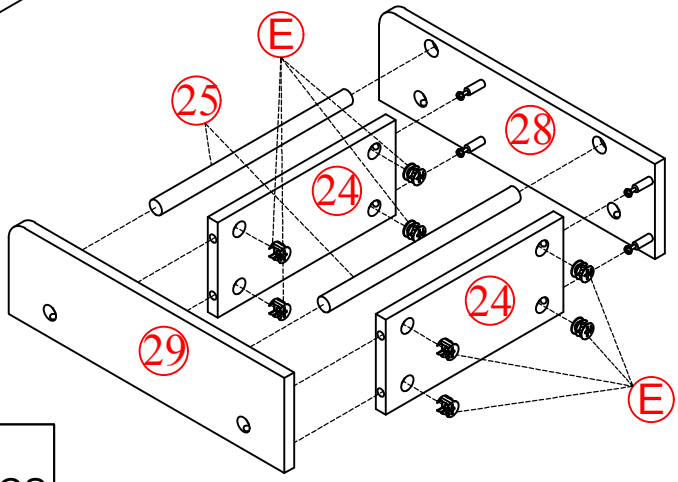

E	Ø15*10MM		16PCS

STEP 8

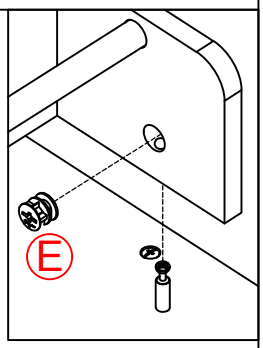

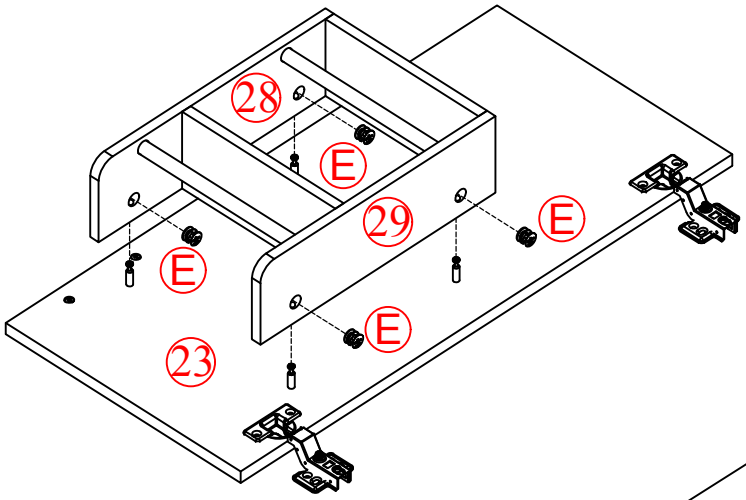

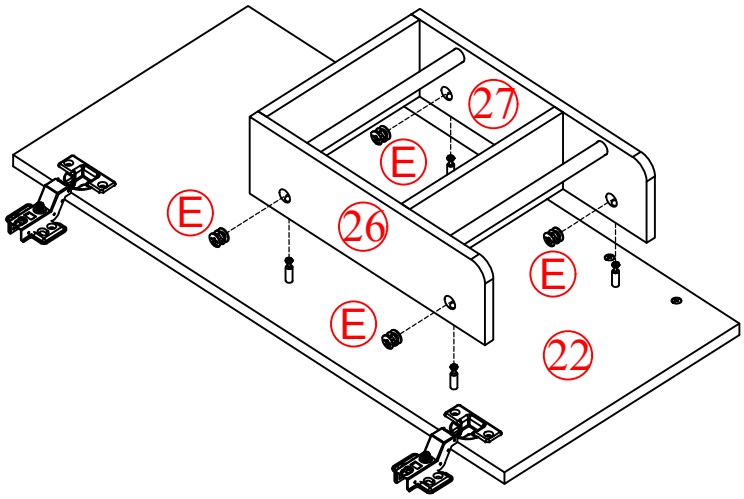

E	Ø15*10MM		8PCS

STEP 9

Three-way adjustable hinge for perfectly aligned doors
1.TO ADJUST DOOR FORWARD OR BACKWARD.
2.TO ADJUST DOOR TO RIGHT ORTO LEFT.
3.TO ADJUST DOOR UP OR DOWN.

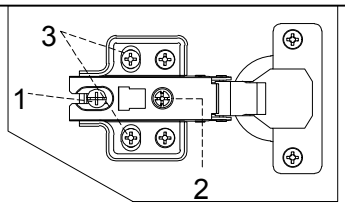

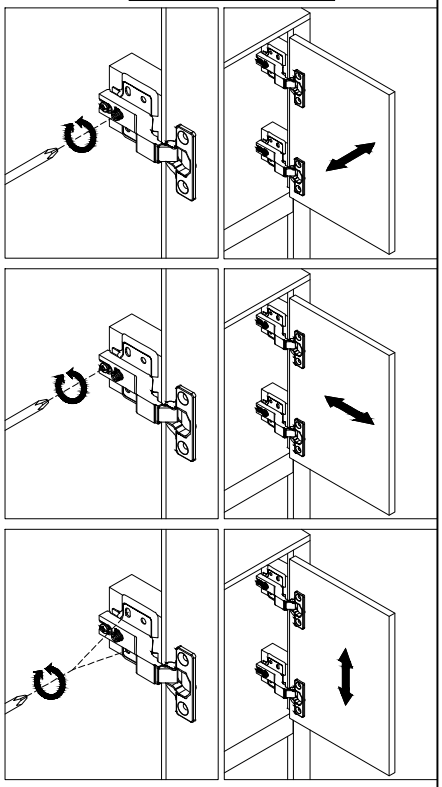

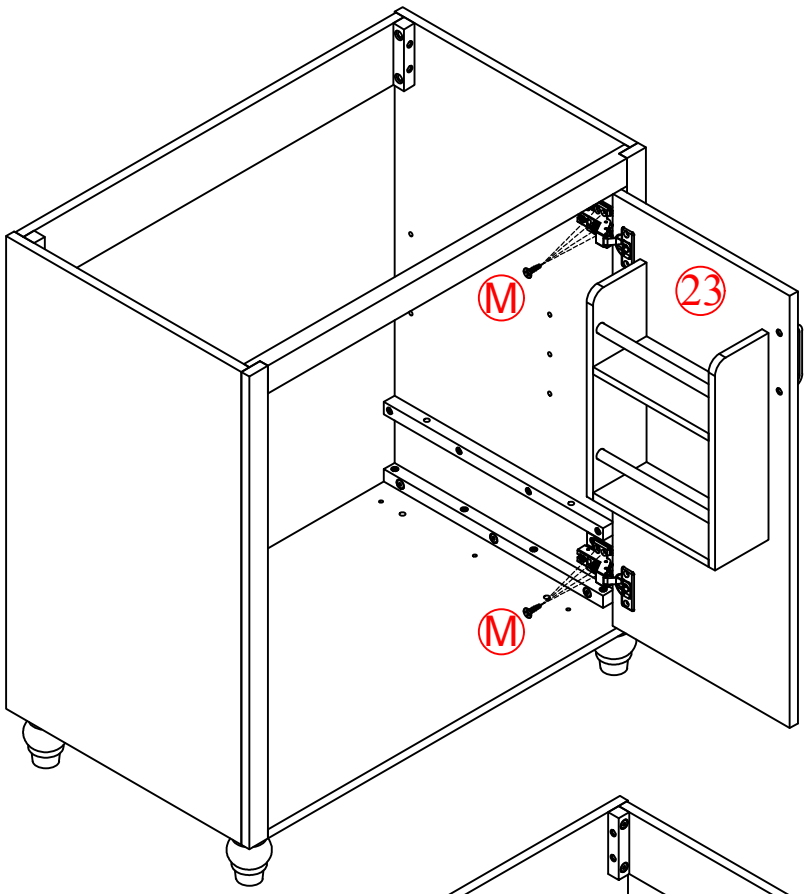

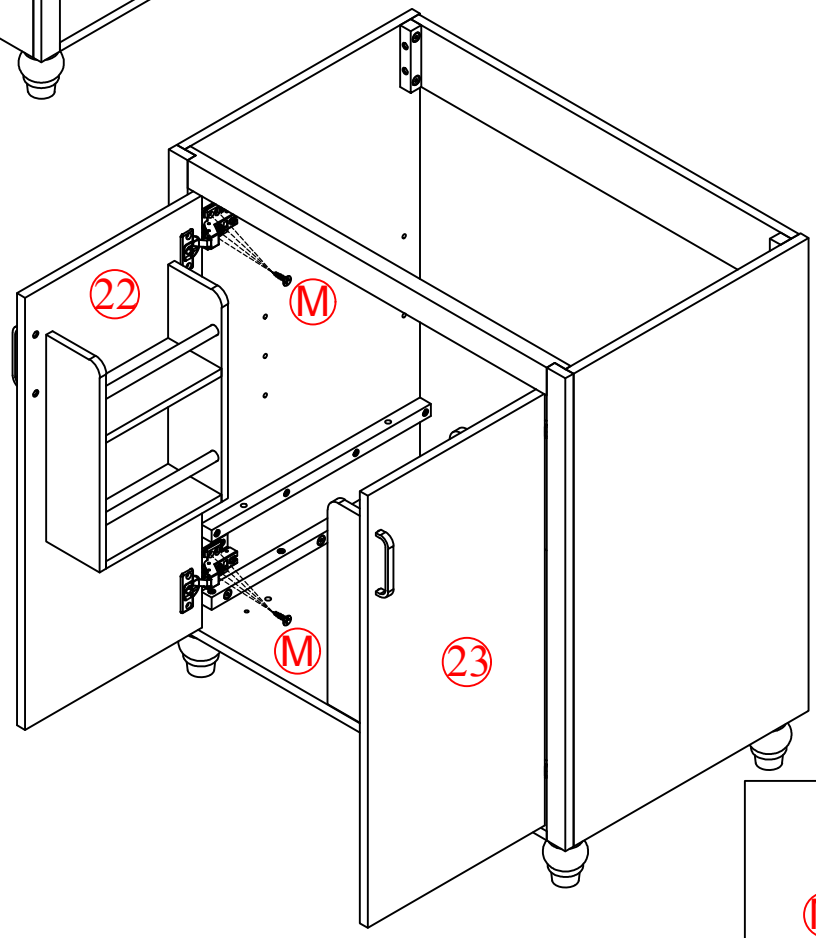

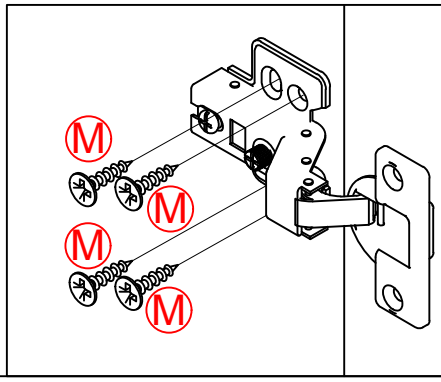

M	3.5*15MM		16PCS

STEP 10

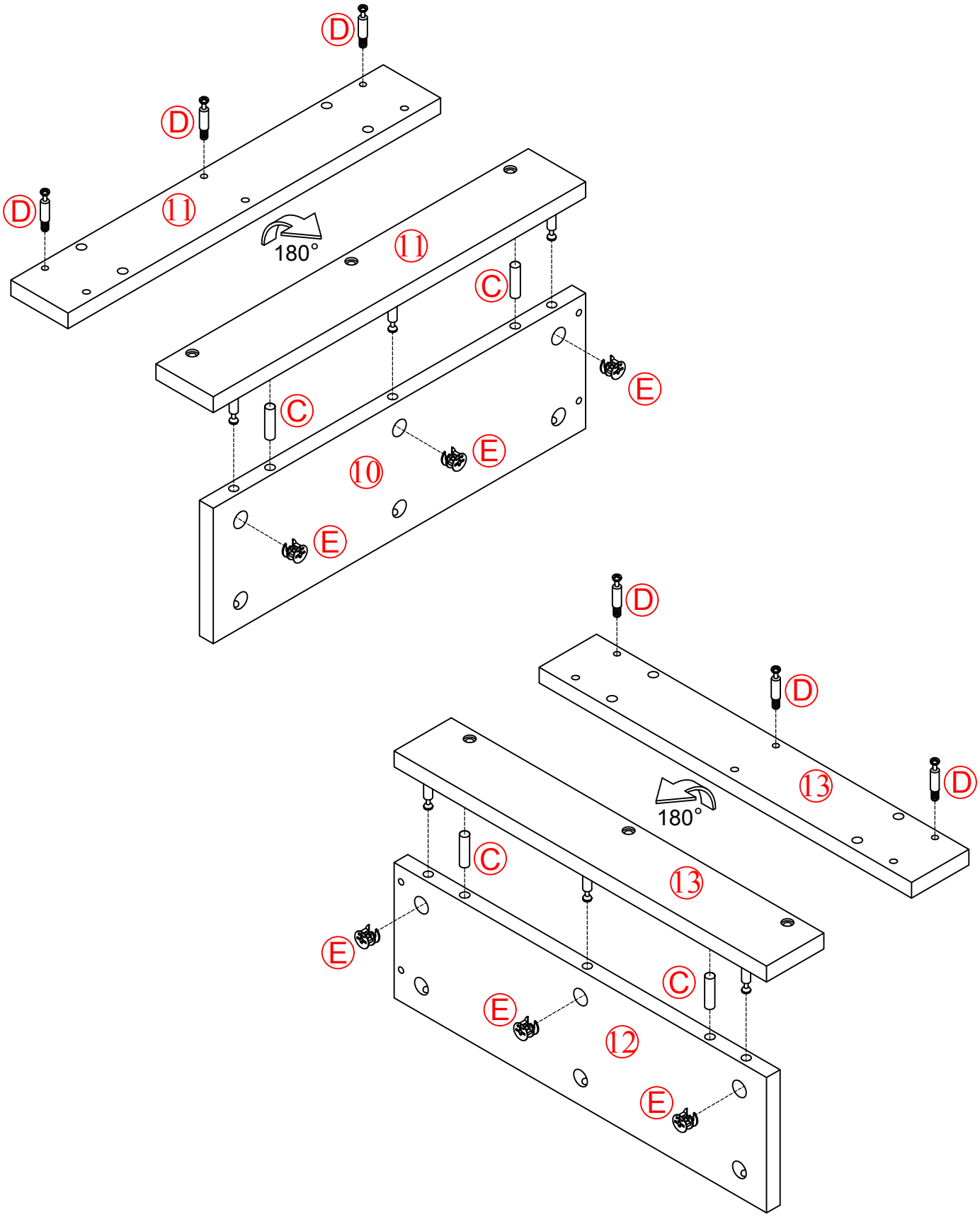

C	Ø8*30MM		4PCS				
D	Ø5*35MM		6PCS	E	Ø15*10MM		6PCS

STEP 11

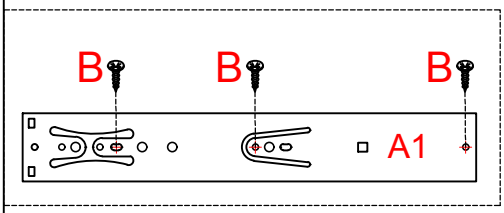

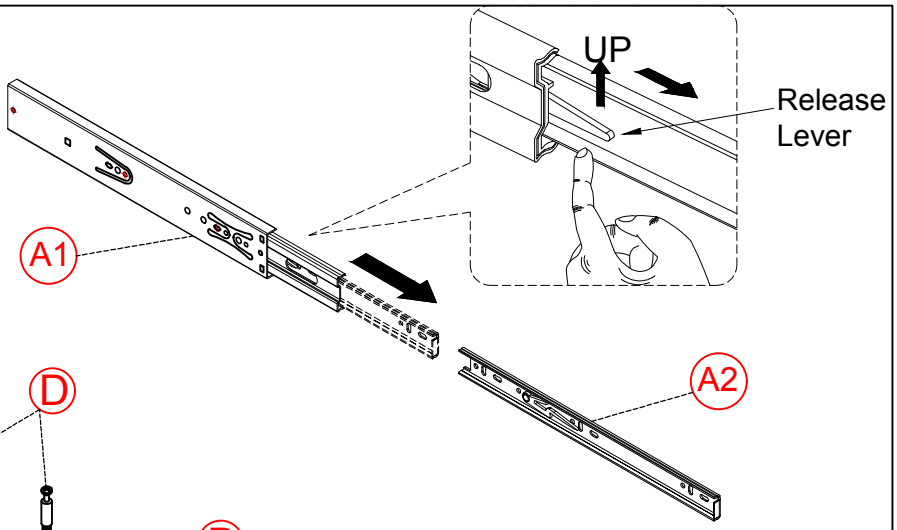

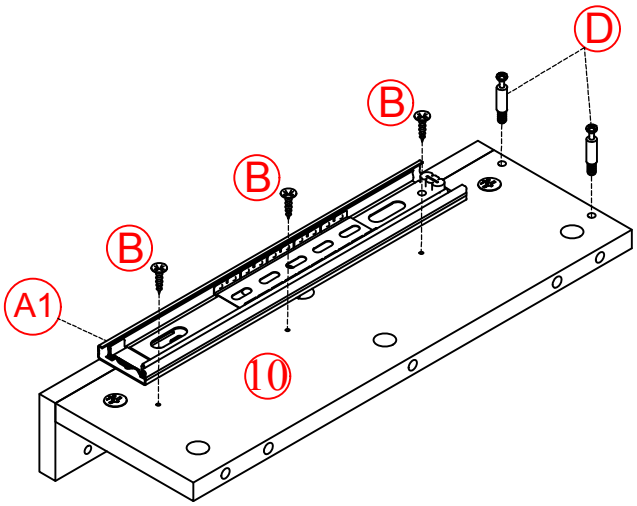

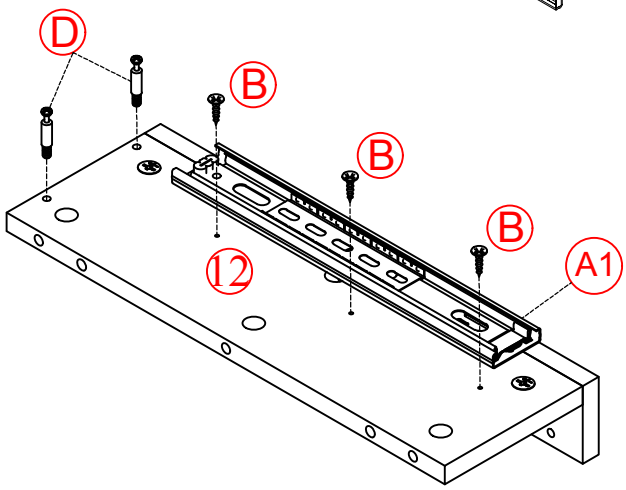

D	Ø5*35MM 	4PCS
A	A1: D30MM 	2PCS

B	3.5*10MM 	6PCS

STEP 12

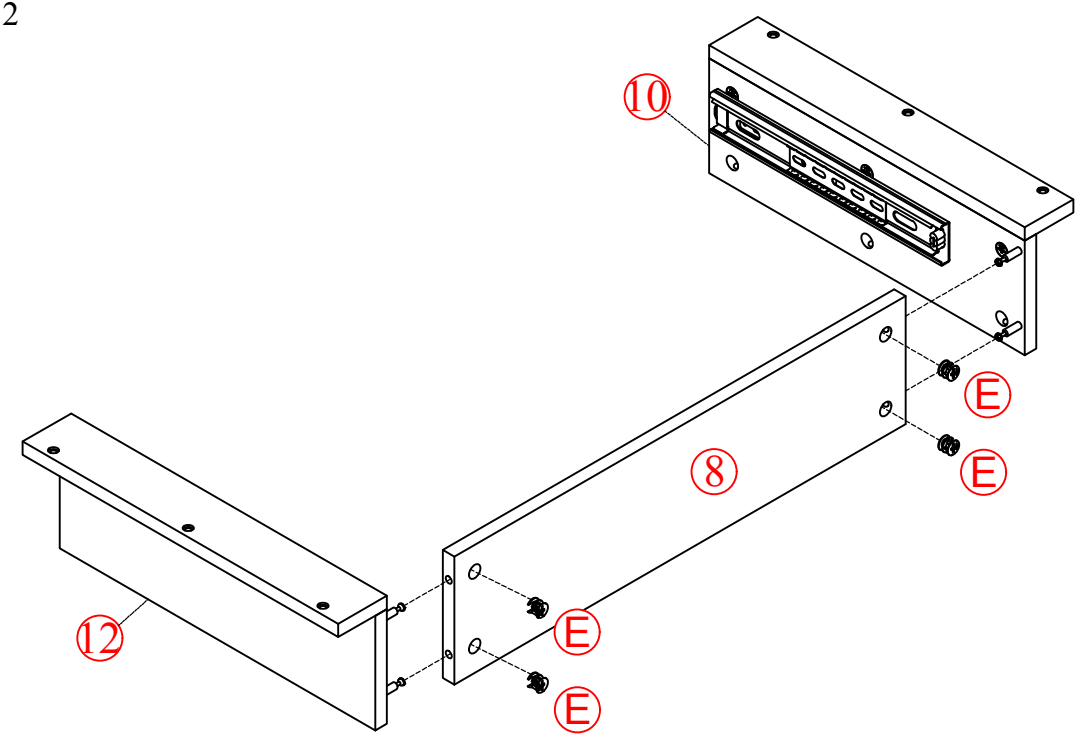

E	Ø15*10MM 	4PCS

STEP 13

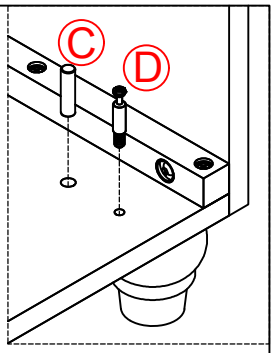

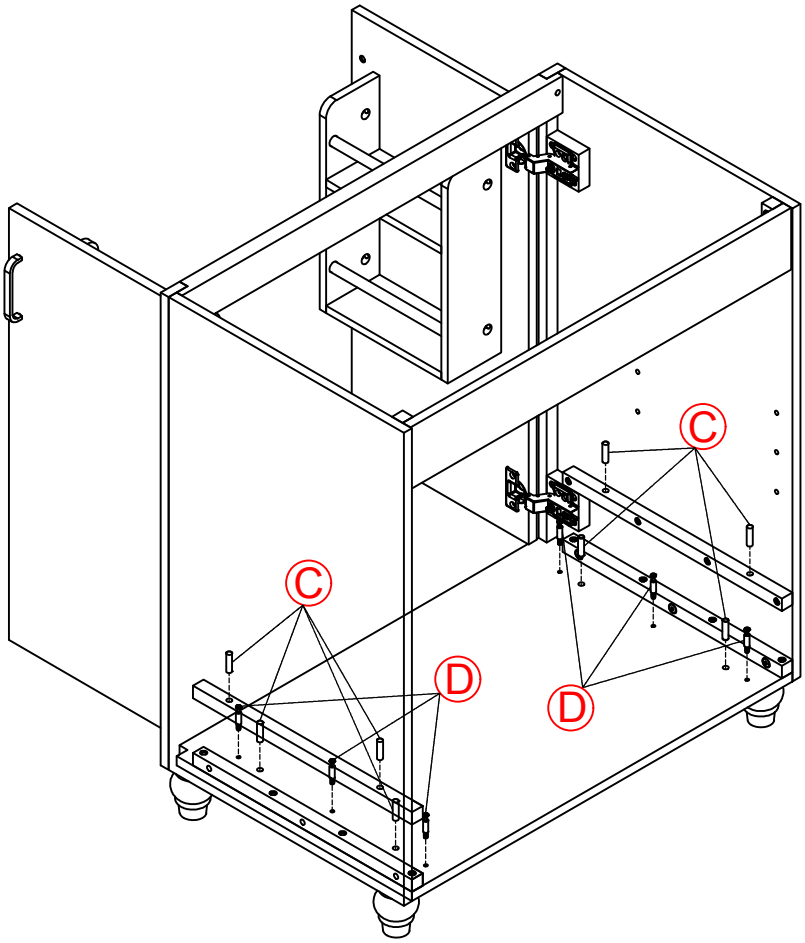

D	Ø5*35MM	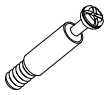	6PCS
C	Ø8*30MM		8PCS

STEP 14

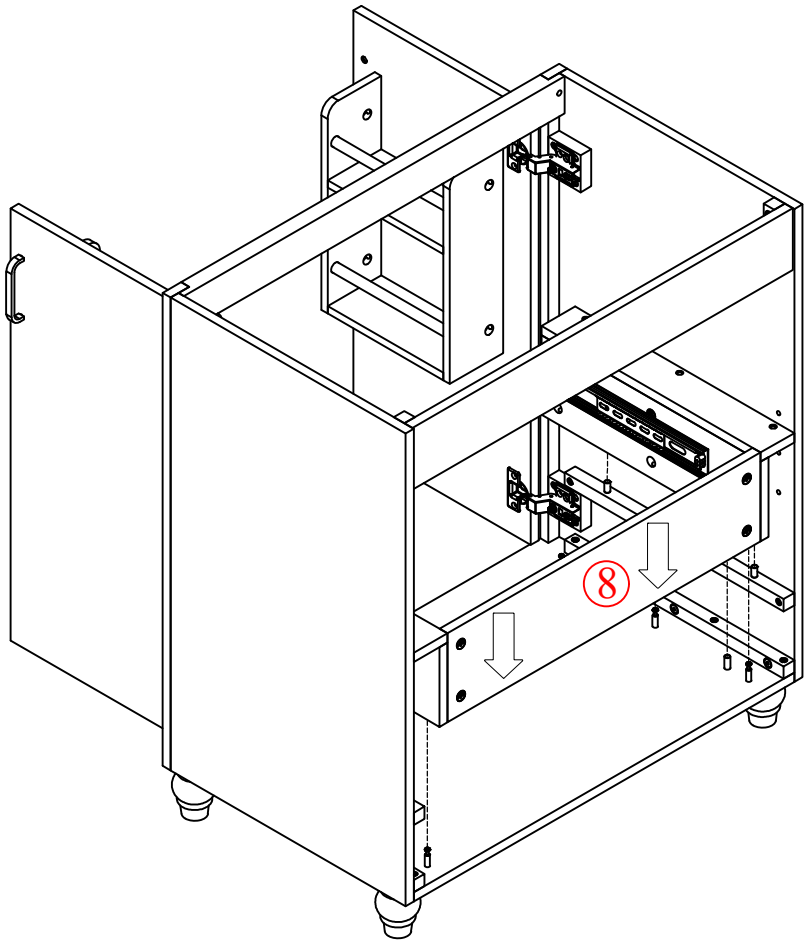

STEP 15

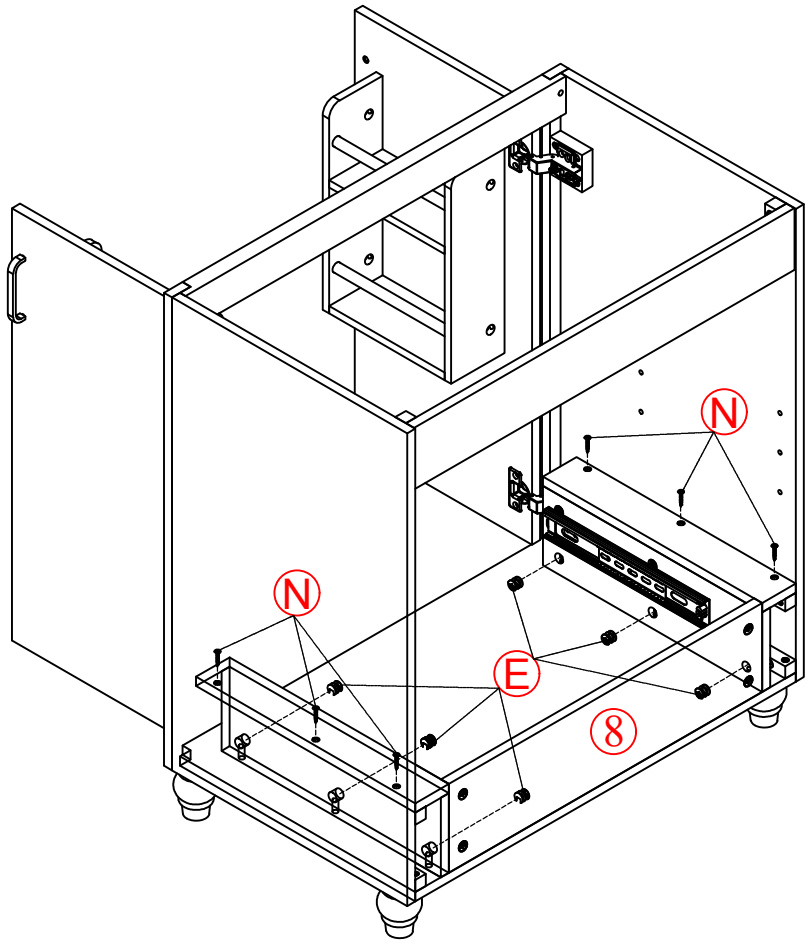

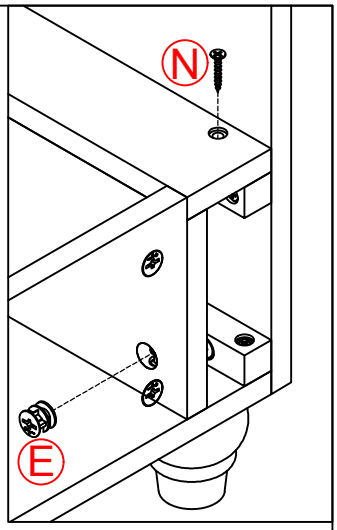

E	Ø15*10MM		6PCS

N	M4*30MM	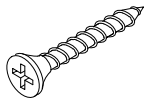	6PCS

STEP 16

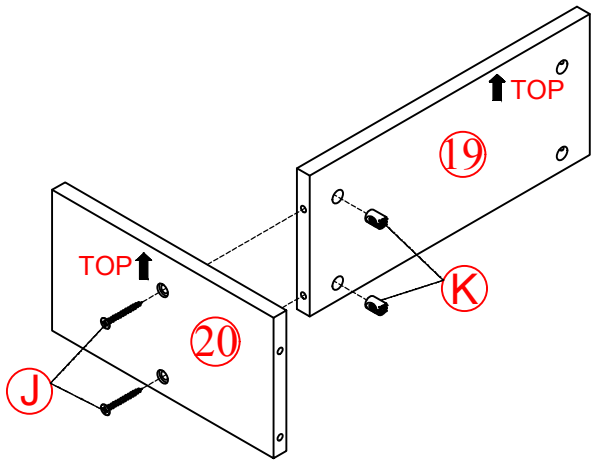

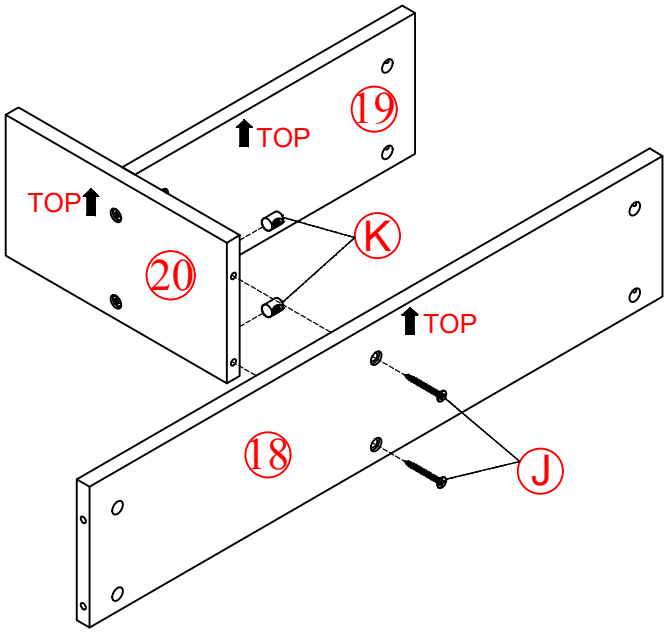

J	M4*50MM	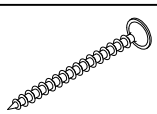	4PCS

K	Ø10*10MM	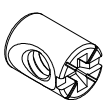	4PCS

STEP 17

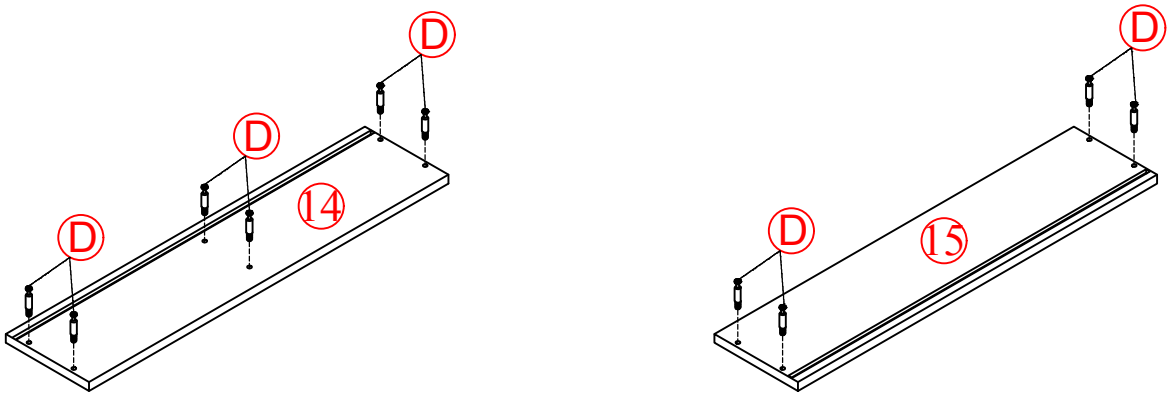

D	Ø5*35MM		10PCS

STEP 18

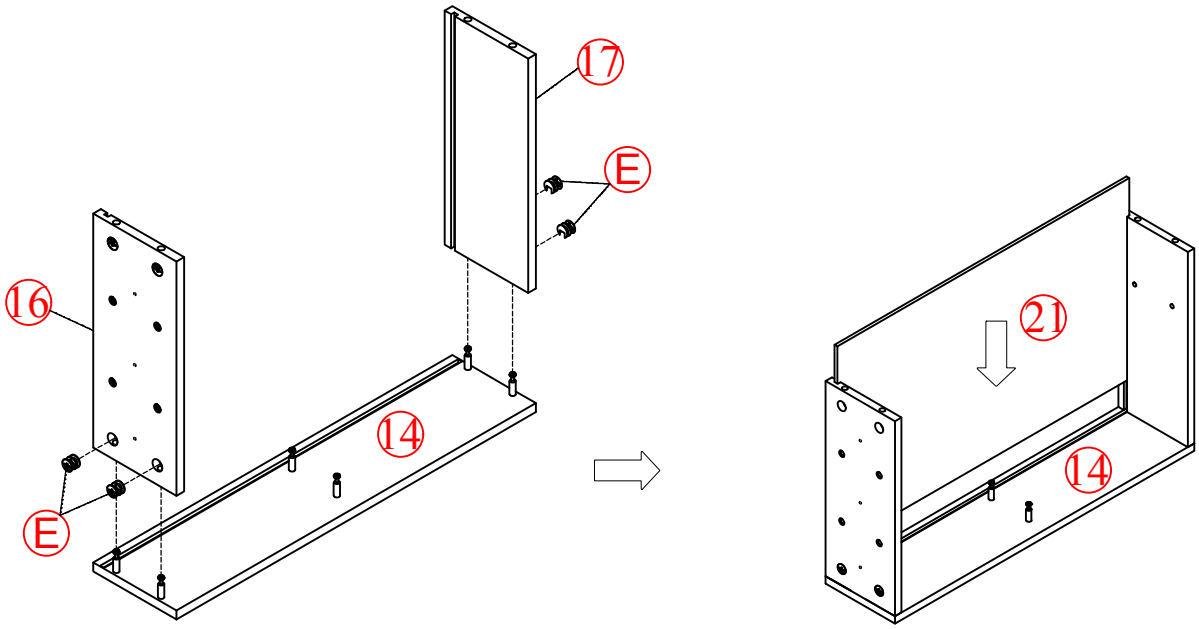

E	Ø15*10MM		4PCS

STEP 19

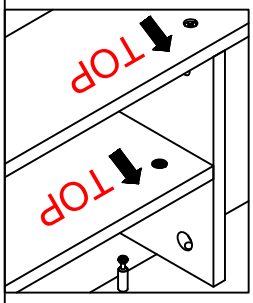

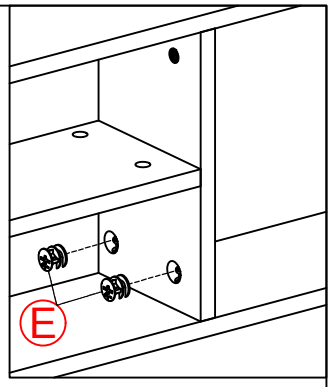

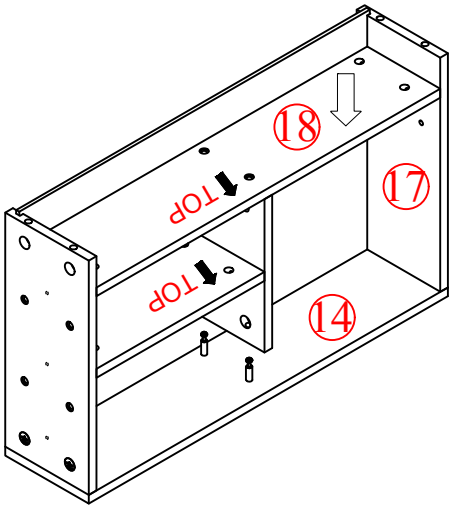

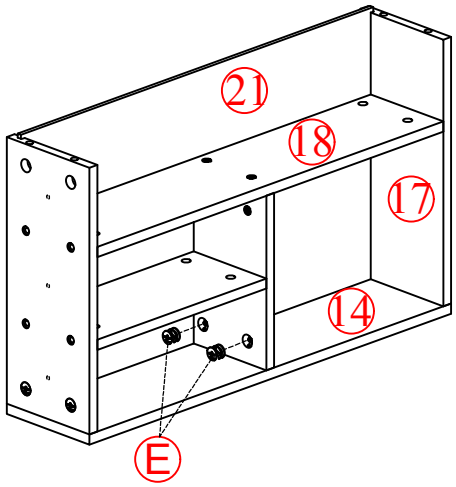

E	Ø15*10MM	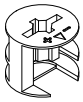	2PCS

STEP 20

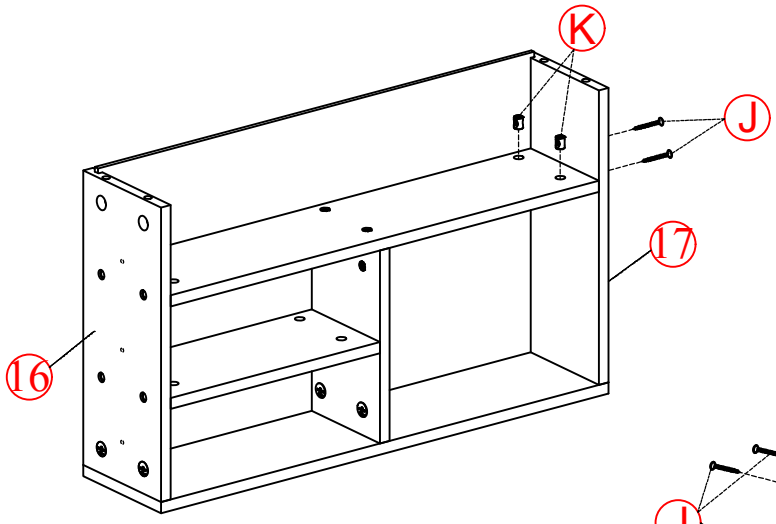

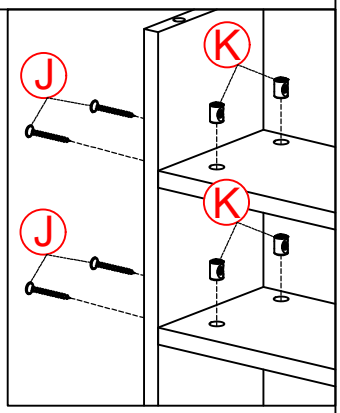

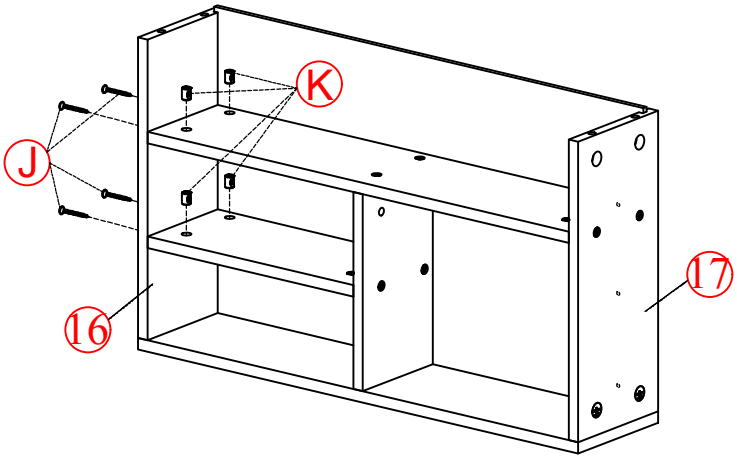

J	M4*50MM	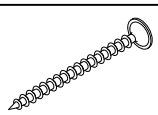	6PCS	K	Ø10*10MM	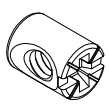	6PCS

STEP 21

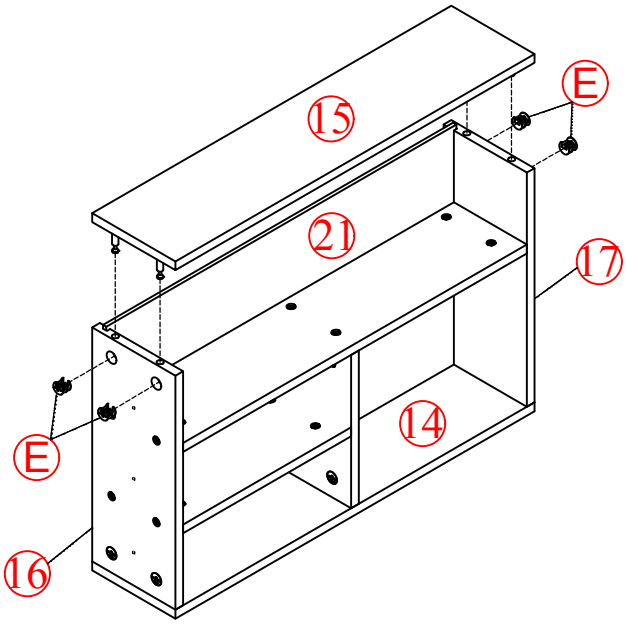

E	Ø15*10MM	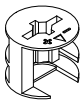	4PCS

STEP 22

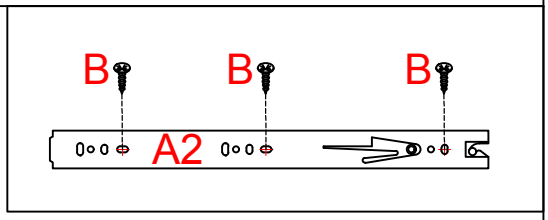

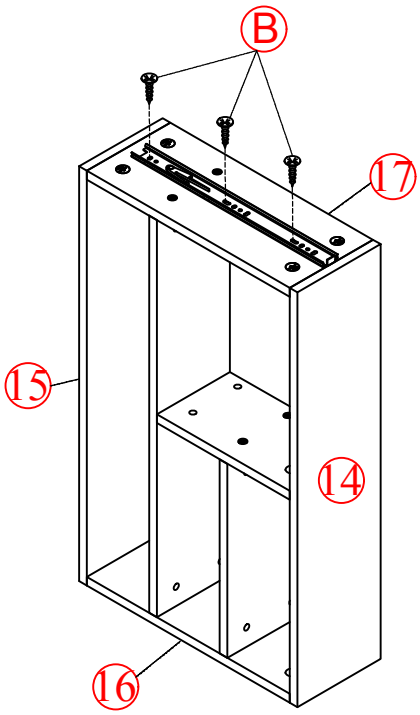

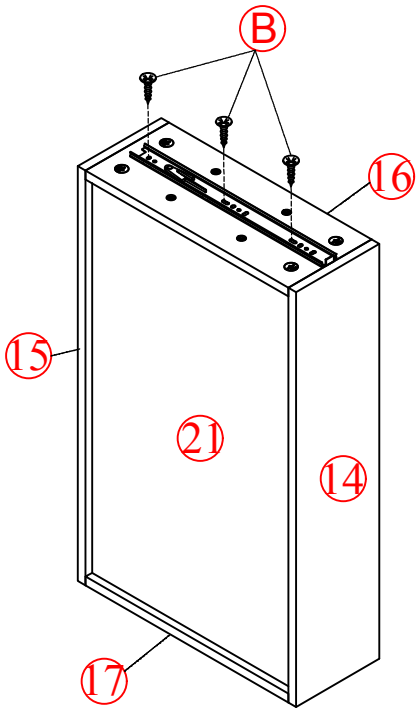

A	A2: D30MM		2PCS	B	3.5*10MM		6PCS

STEP 23

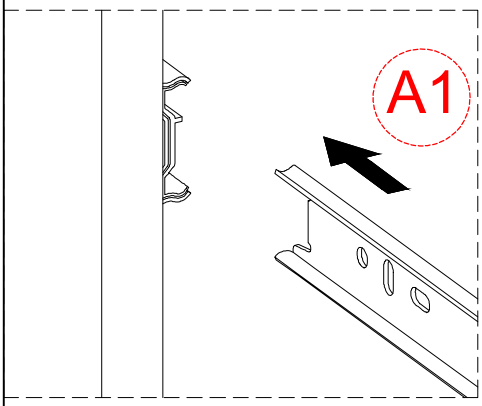

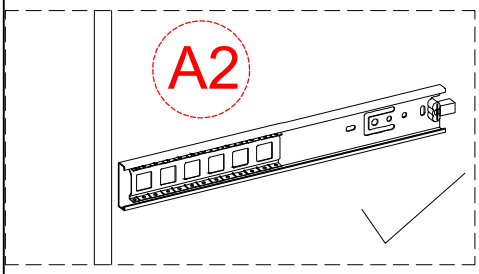

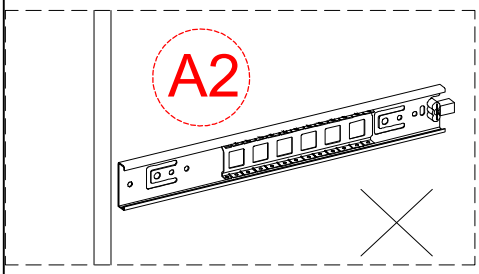

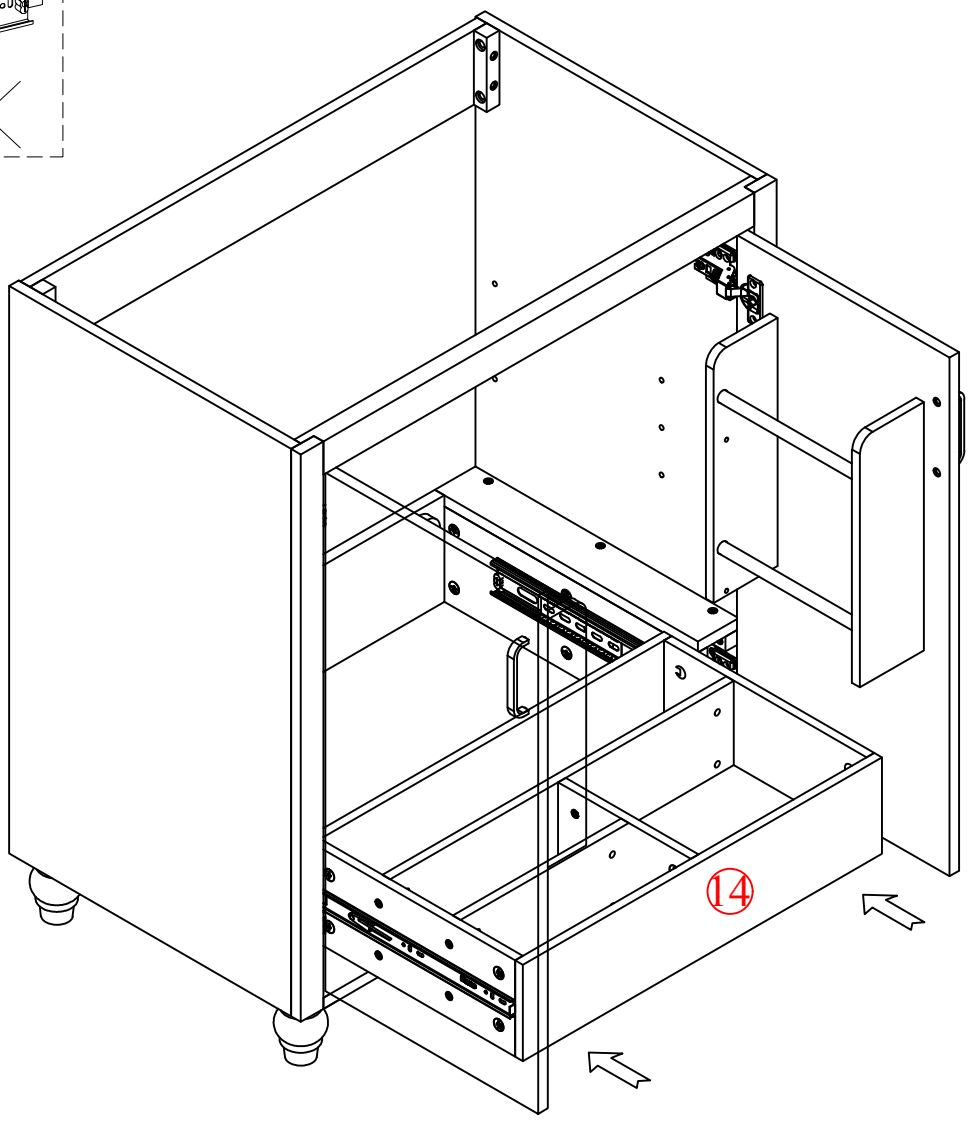

STEP 24

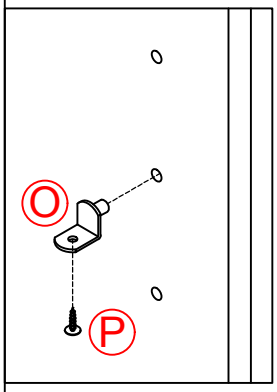

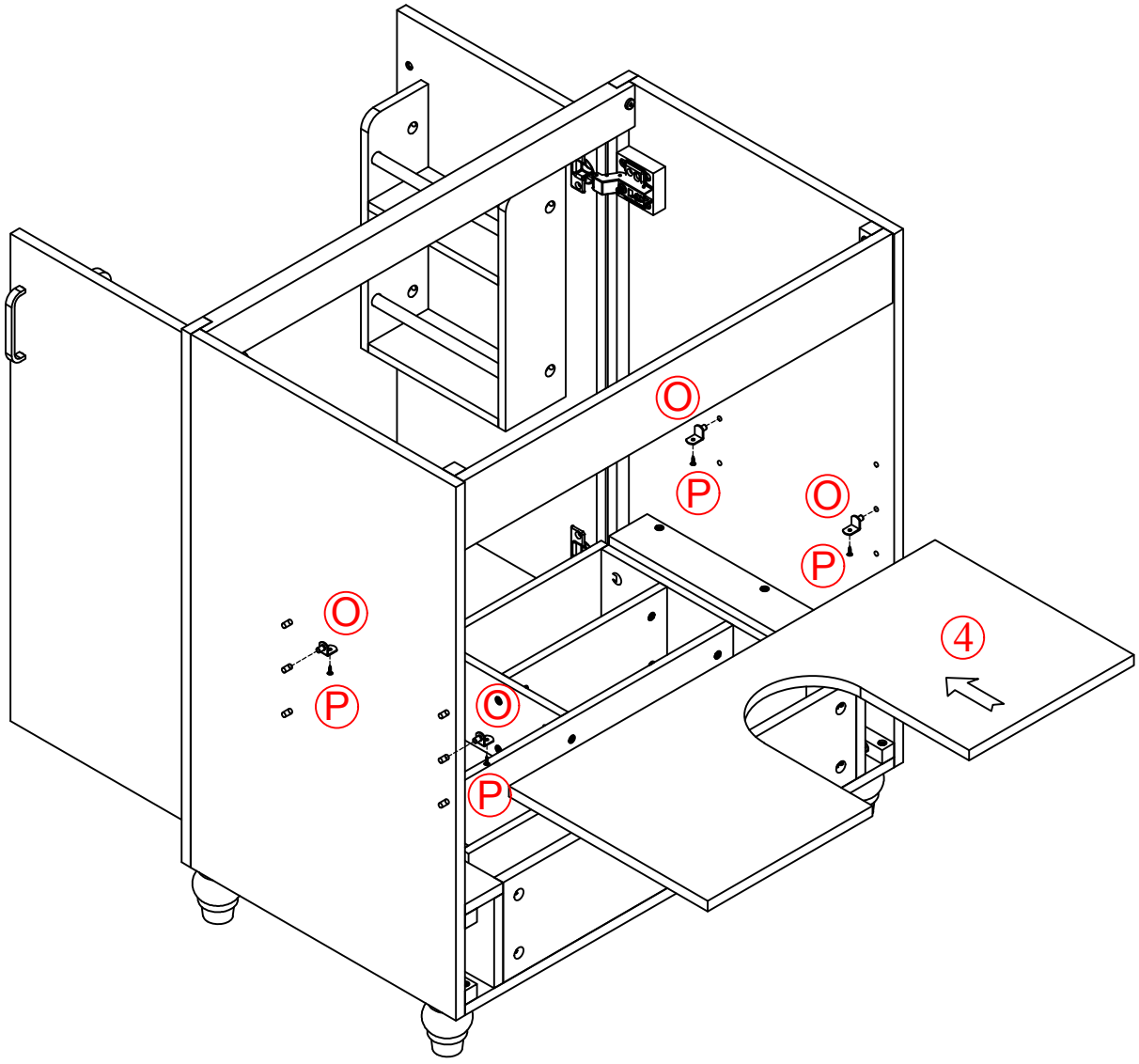

O	L 15MM	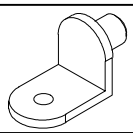	4PCS	P	3.5*12MM		4PCS

STEP 25

To install the Top (1) to the vanity (2).
Apply silicone caulk to the top edge of the wood cabinet. With the help of another adult, gently lower the Sink
top with assembled sink
onto the cabinet. Make sure the Sink top is flush with the back side of the wood cabinet and the wood cabinet left and right side walls.

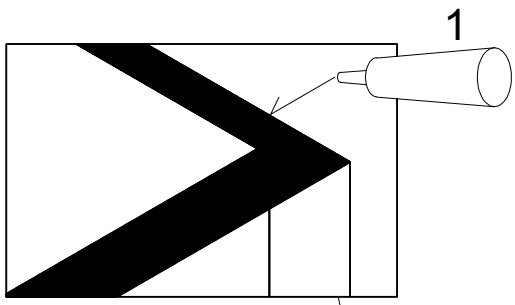

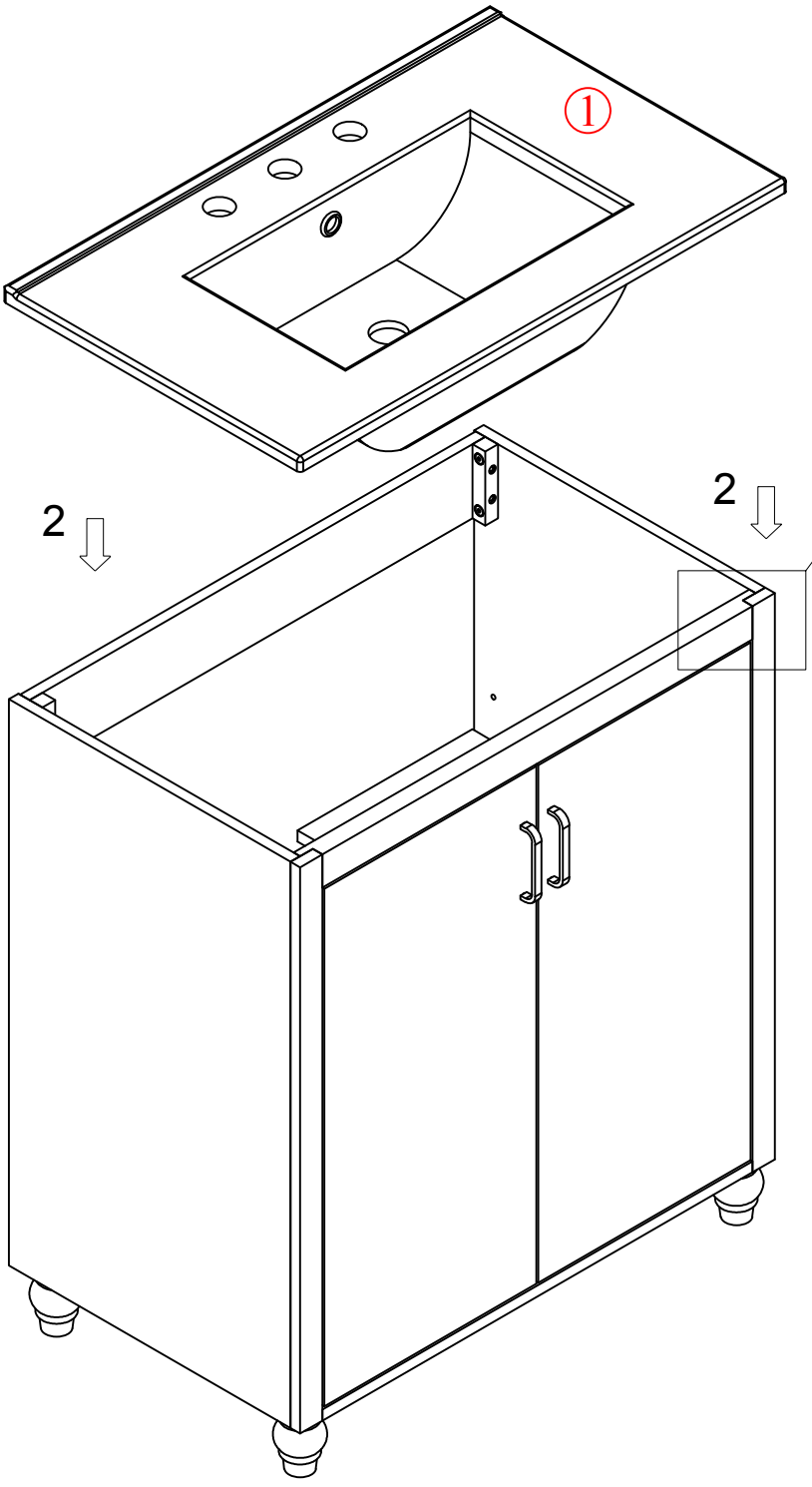

STEP 26

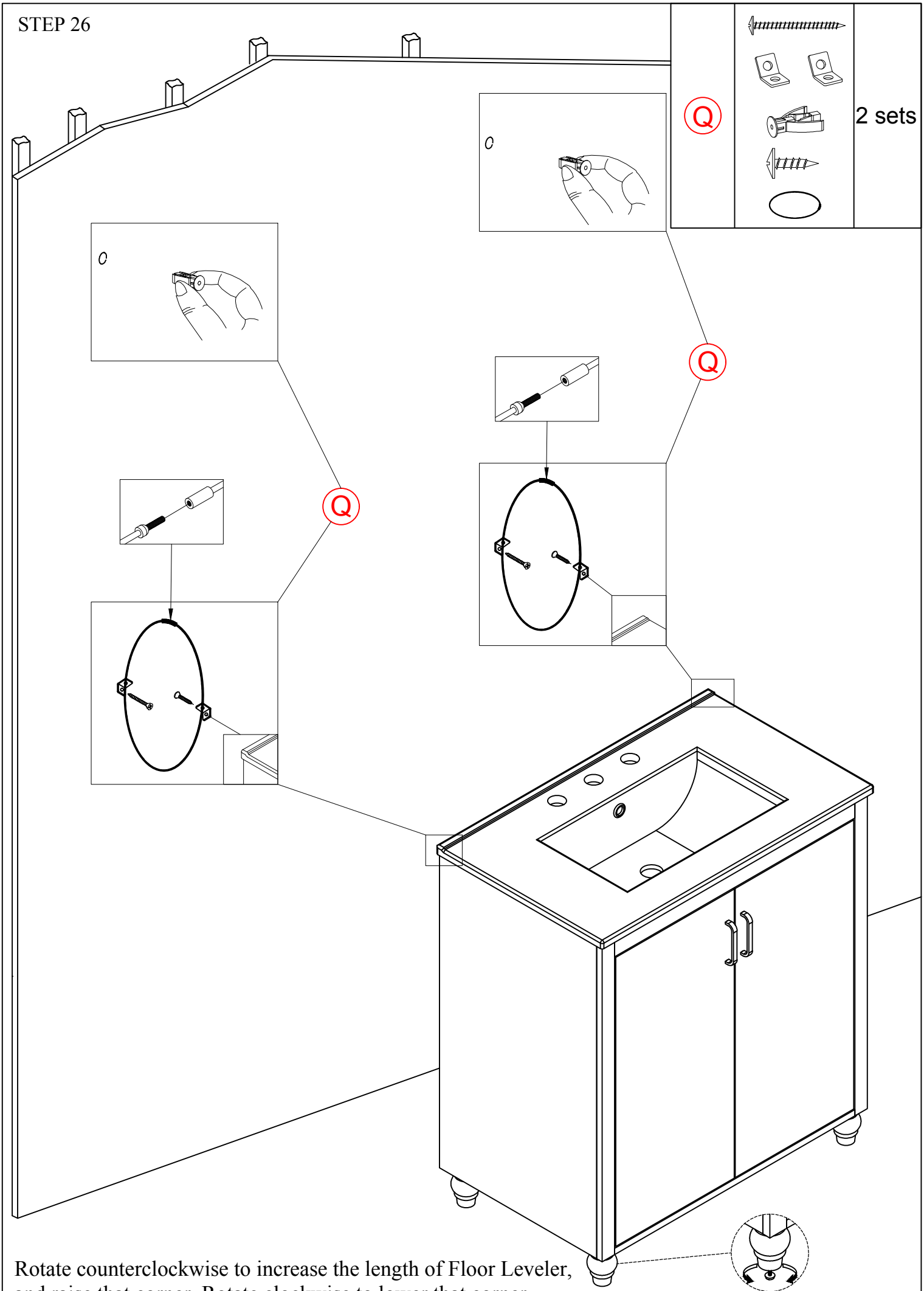

Rotate counterclockwise to increase the length of Floor Leveler, and raise that corner. Rotate clockwise to lower that corner.

HINGE ADJUSTMENTS

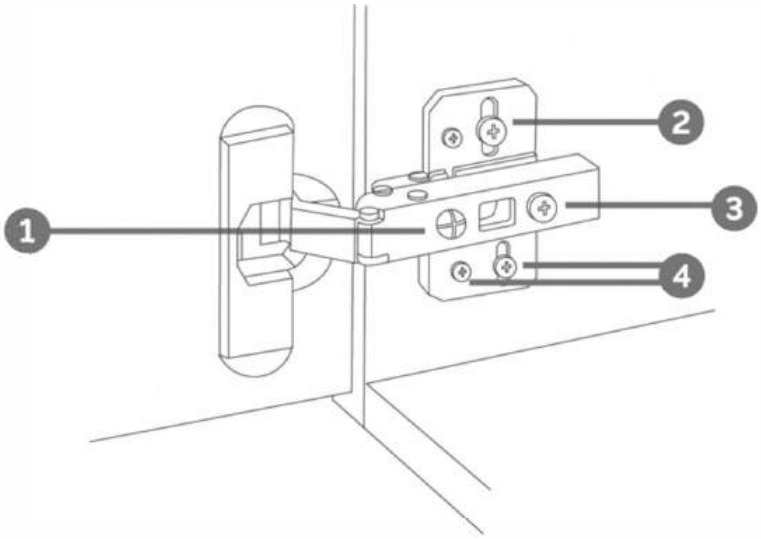

1 Sideways / Tilt adjustment

Turn the screw
clockwise to move the door further away from the side of the cabinet
anticlockwise to move the door closer to the side of the cabinet

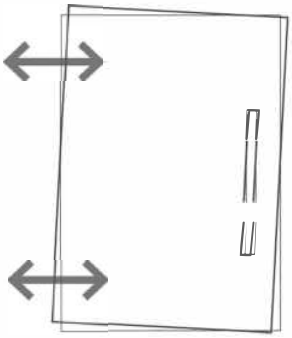

2 4 Height adjustment

While supporting the weight of the door, turn the screws
clockwise to move the door up
anticlockwise to move the door down

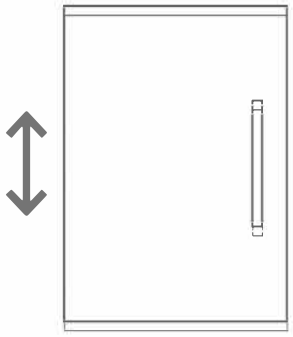

3 Forward and back adjustment

If the gap between the back of the door and the cabinet is too small, and the door may not close fully. Turn the screw
clockwise to decrease the gap between the door and the cabinet
anticlockwise to increase the gap between the door and the cabinet

