INSPIREDHOME®

Kamille King Assembly Instructions

Hardware List includes bolts and washers for side rails attachment.

A	B	C	D	E	F	G	H	I
M8*30MM	M8*40MM	M8*60MM	M8	M8	M8	M8	M8	
10PCS	16PCS	4PCS	30PCS	30PCS	1PC	1PC	8PCS	30PCS
J	**K**	**L**	**M**	**N**	**O**	**P**	**Q**	**R**
	H-150MM	H-205MM						
30PCS	4PCS	4PCS	45PCS	2PCS	2PCS	2PCS	1PC	1PC

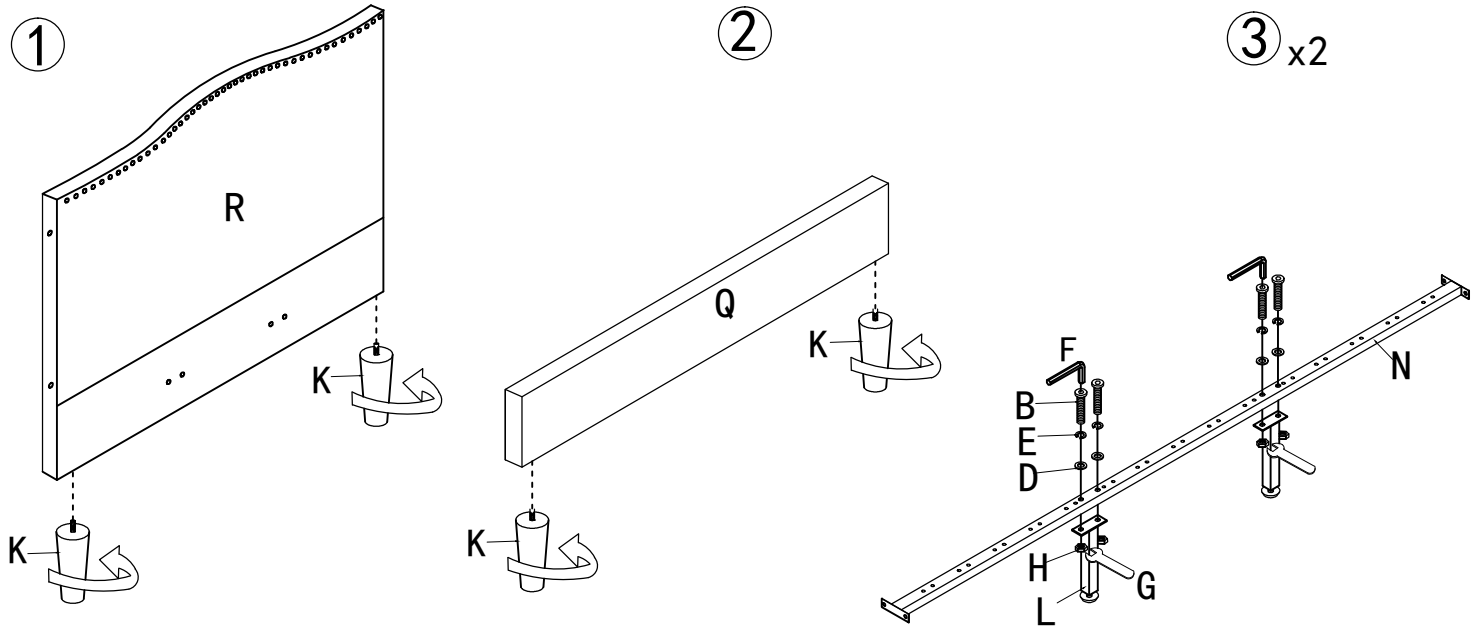

Step#1

Attach bed feets(K)to the headboard.

Step#2

Attach bed feets(K)to the Footboard.

Step#3

Attach steel center support legs(L)to the center support rail(N) by using Wrench(F/G), Bolt(B), Washer(E/D) and Nut(H)

CONGRATULATIONS ON YOUR NEW BED PURCHASE

~ warning:do not move bed after final assembly as it may result damages to floor and/or bed. ~

INSPIREDHOME®

Kamille King Assembly Instructions

Hardware List includes bolts and washers for side rails attachment.

A	B	C	D	E	F	G	H	I
M8*30MM	M8*40MM	M8*60MM	M8	M8	M8	M8	M8	
10PCS	16PCS	4PCS	30PCS	30PCS	1PC	1PC	8PCS	30PCS
J	**K**	**L**	**M**	**N**	**O**	**P**	**Q**	**R**
	H-150MM	H-205MM						
30PCS	4PCS	4PCS	45PCS	2PCS	2PCS	2PCS	1PC	1PC

④

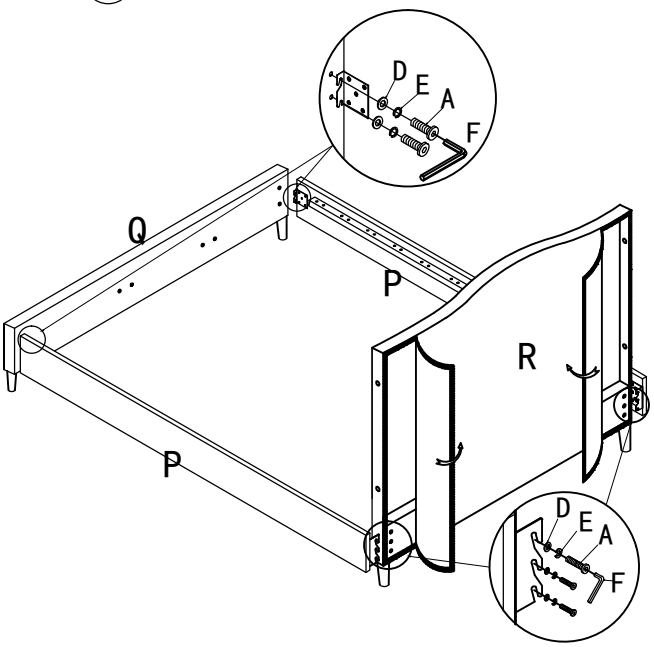

⑤

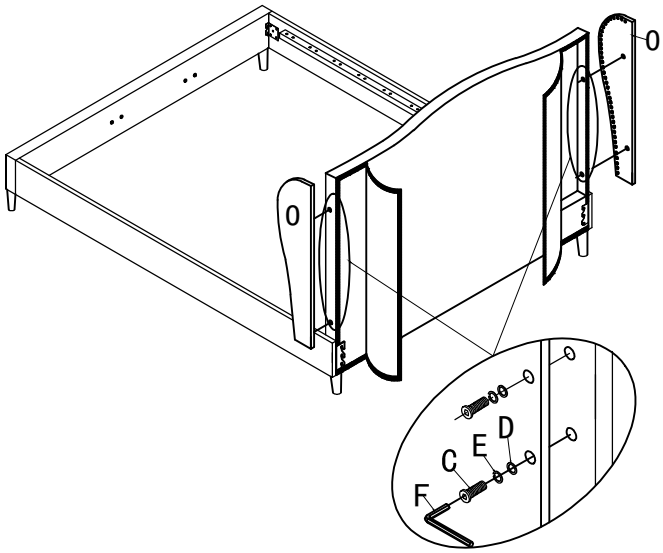

Step#4

Attach side rails to headboard and footboard by using the Bolt(A)and Washer(E/D).

Step#5

Attach wingback to headboard by using the Bolt(C) and Washer(E/D).

CONGRATULATIONS ON YOUR NEW BED PURCHASE

~ warning:do not move bed after final assembly as it may result damages to floor and/or bed. ~

INSPIREDHOME®

Kamille Kiny Assembly Instructions

Hardware List includes bolts and washers for side rails attachment.

A	B	C	D	E	F	G	H	I
M8*30MM	M8*40MM	M8*60MM	M8	M8	M8	M8	M8	
10PCS	16PCS	4PCS	30PCS	30PCS	1PC	1PC	8PCS	30PCS
J	**K**	**L**	**M**	**N**	**O**	**P**	**Q**	**R**
	H-150MM	H-205MM						
30PCS	4PCS	4PCS	45PCS	2PCS	2PCS	2PCS	1PC	1PC

⑥

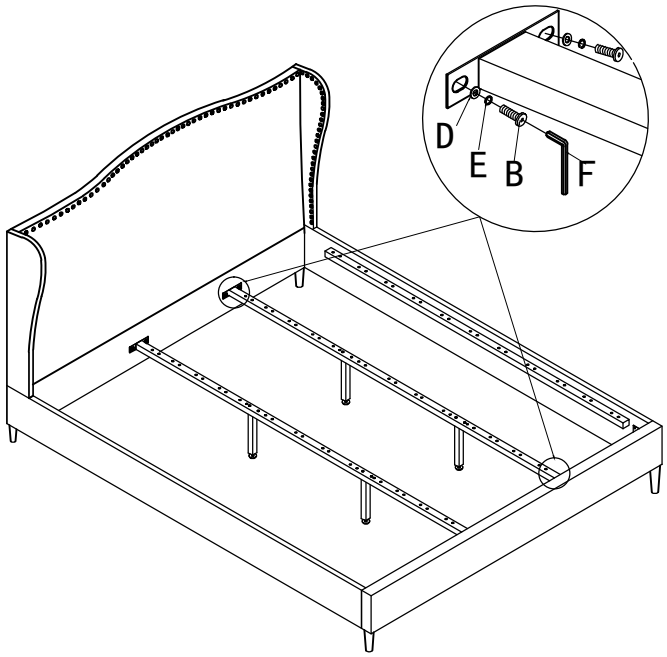

⑦

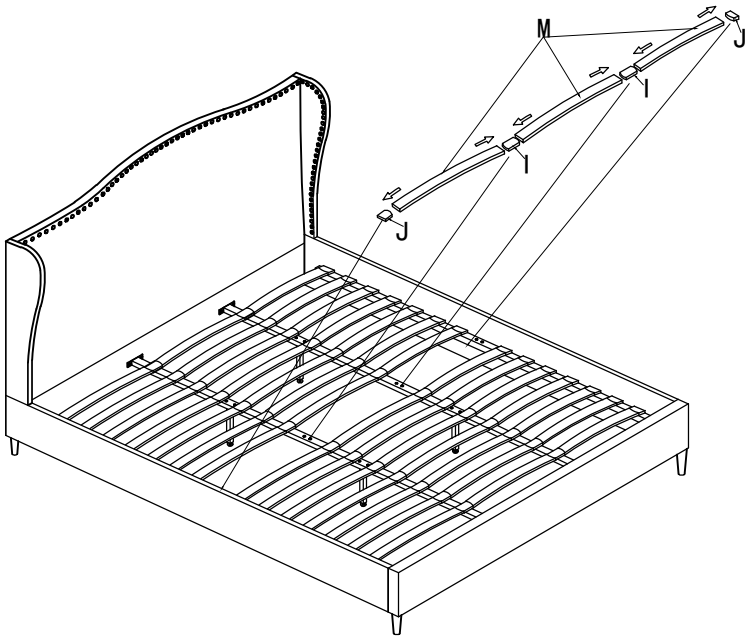

Step#6

Attach steel center support rails to the headboard and footboard by using Bolt(B) and Washer(E/D).

Step#7

(IMPORTANT! Make sure slats are inserted into center cilp BEFORE snapping into place) . Verify Euro Slat System Tension Slats are installed upwards per diagram. Insert slats into the Center Clip(I) and the End Clip(J) before snapping into place

CONGRATULATIONS ON YOUR NEW BED PURCHASE

~ warning:do not move bed after final assembly as it may result damages to floor and/or bed. ~