LOCKLY **SECURE**
LOCKLY **SECURE PLUS**
LATCH EDITION

INSTALLATION GUIDE

PGD628 | PGD628F | PGD628FC

Welcome!

This guide will walk you through step-by-step how to install and get your Lockly Secure up and running. Installation generally takes less than 30 minutes. If you have any questions please reference our online support at: Lockly.com/support or call (669) 500-8835 for help.

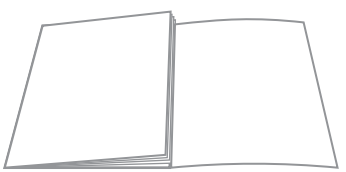

Reference installation parts overview foldout on back page

Preparation

To complete the installation you will need:

Phillips Screwdriver

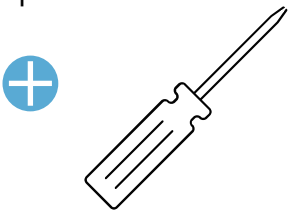

Flathead Screwdriver

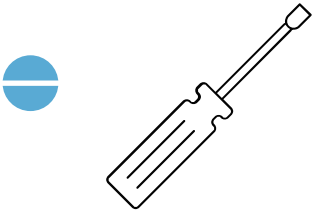

Tape measure or ruler

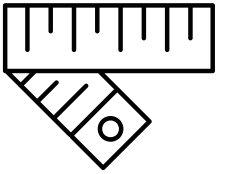

Vise

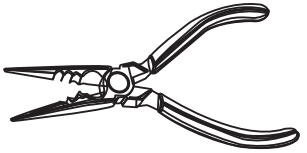

Screwdriver with drill bits

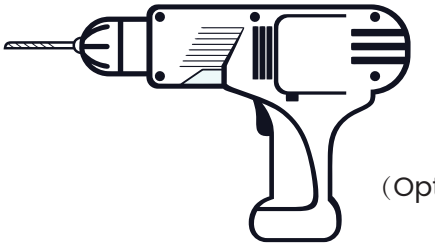

（Optional）

Drilling is not required to install the lock, and is optional. However if you are installing your lock on a brand new door, a drill is required if there are no holes prepared for lock installation.

Preparation

Remove existing door hardware, latch or deadbolts before installing the new lock. Use provided template to bore new holes if needed.

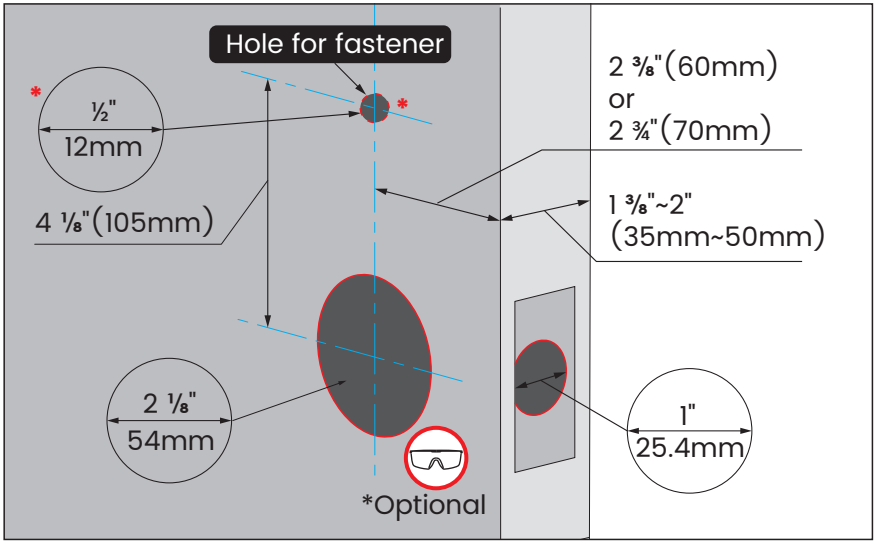

1. Measure and confirm your door is between 1 ⅜" ~ 2" (35mm ~ 50mm).
2. Measure and confirm the hole in the door is 2 ⅛" (54mm).
3. Measure and confirm that the backset is between 2 ⅜" (60mm) to 2 ¾" (70mm).
4. Measure and confirm that hole in the door edge is 1" (25.4mm).

IMPORTANT

* You are not required to drill an extra hole in your door. We have provided double-sided adhesive tape for you to help stabilize the lock during installation. Only drill a hole if you wish to have added stability. Please refer to the provided template for drilling if needed. Use goggles to protect your eyes if you need to drill door holes.

Step 1

INSTALLING THE LOCKSET

To ensure normal functions and stable long-term operation of this lockset, replace your door's old lockset with the provided Lockly lockset. The included lockset is designed and optimized for Lockly smart locks.

Measure the distance between center of front door hole to the edge of your door. Push the shaft (a) to adjust the lockset to 2 ⅜"(60mm) or 2 ¾"(70mm).

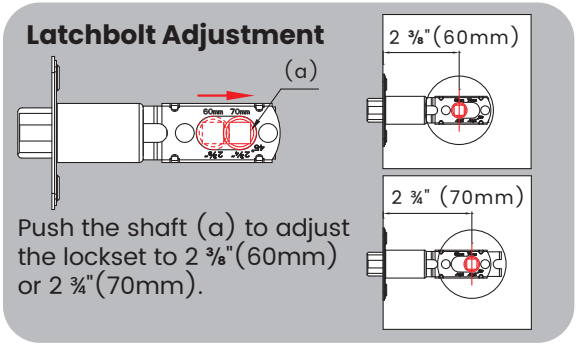

QUICK TIP

the shaft's horizontal and vertical aligment must be sustained during installation to ensure latch will fully extend and lock securely.

Facing the door exterior, install the lockset according to the in-swing or out-swing opening direction of your door.

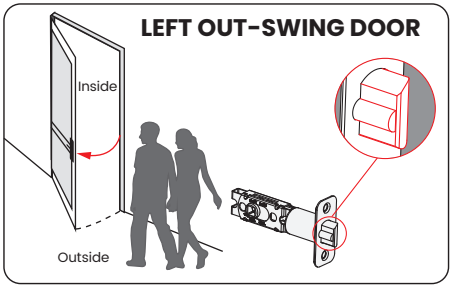

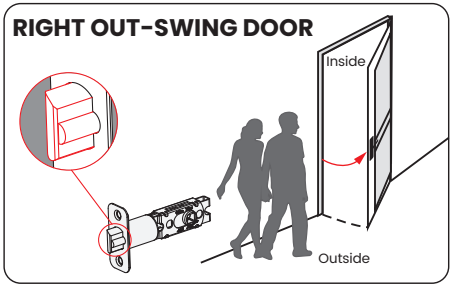

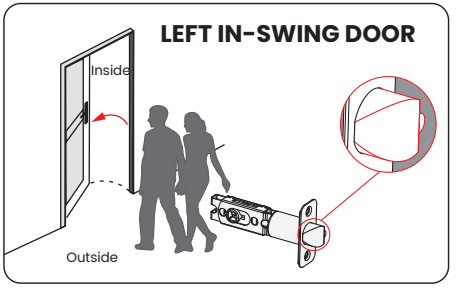

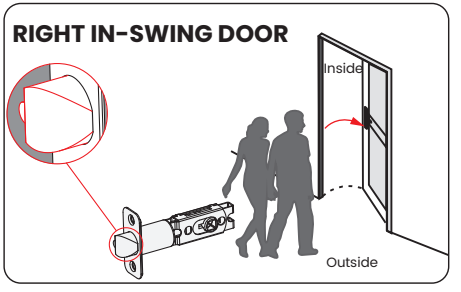

Secure lockset with provided G screws.

Step 2

CHANGING HANDLE FOR RIGHT OR LEFT SWING DOORS

The lock ships with handle default for right in-swing or left out-swing door. Check the diagram below if you are unsure of you door orientation.

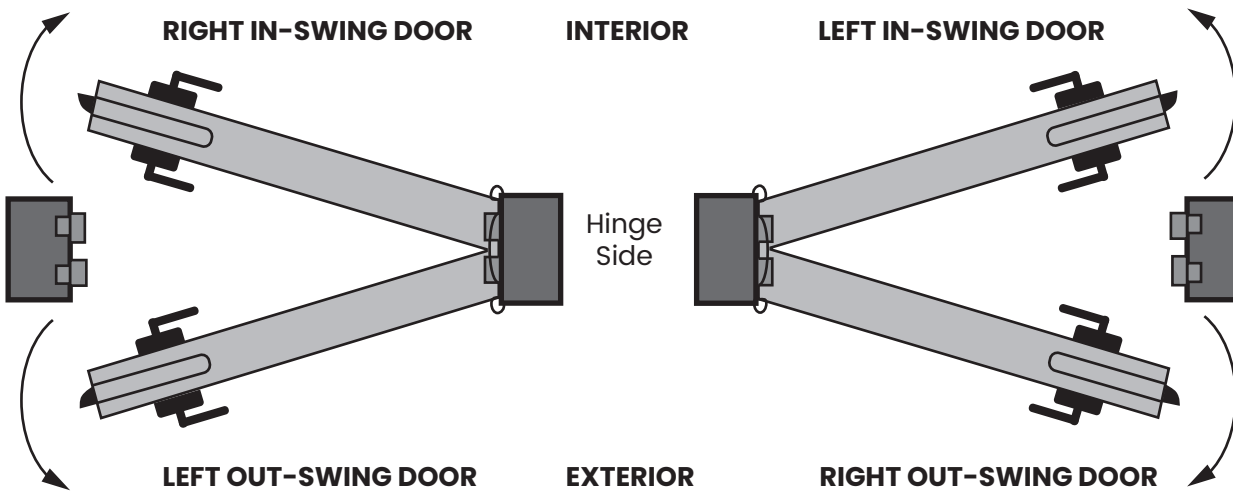

No need to change door handle orientation. Skip Step 2.

LEFT IN-SWING and RIGHT OUT-SWING DOORS require changing the door handle orientation. Contnue to follow Step 2 to change exterior and interior door handle orientation.

Changing the Exterior Handle Orientation

1

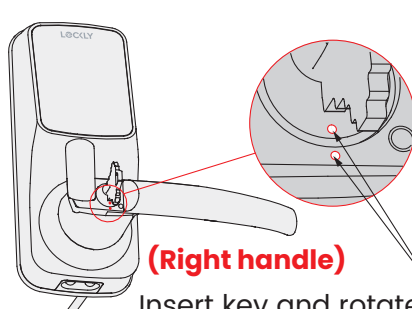

(Right handle)

Insert key and rotate lock face so that the two white dots align as shown.

2

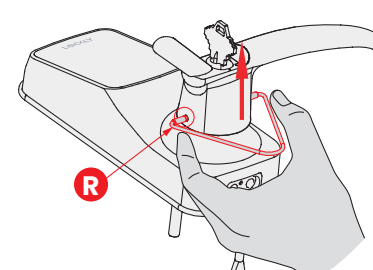

Use the provided pin insert **R** to push the metal pin located at the 3 o'clock of the the base handle, then the other pin at 9 o'clock position. Remove the handle once the pins are compressed.

CHANGING HANDLE FOR RIGHT OR LEFT SWING DOORS

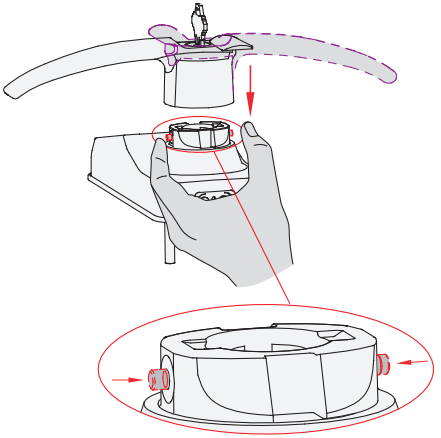

3

Rotate the handle 180° to the other side of the lock.

Using your fingers, press the two pins located on the left and right side of the the lock to insert the handle back onto the lock.

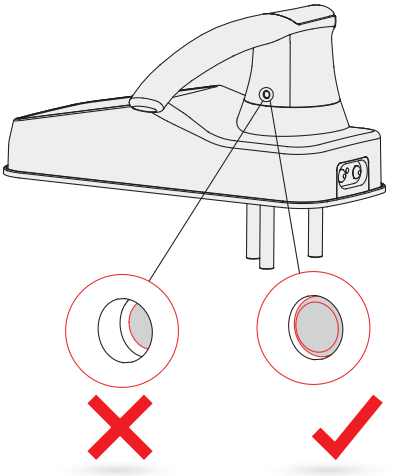

4

Confirm that your installation was complete by checking if the pins are flush against the handle, and has popped out. Adjust the handle accordingly to make sure the pins are fully decompressed and sits flush against the surface.

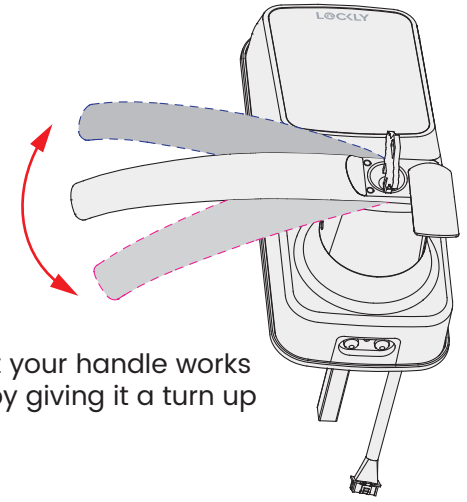

5

Check that your handle works smoothly by giving it a turn up and down.

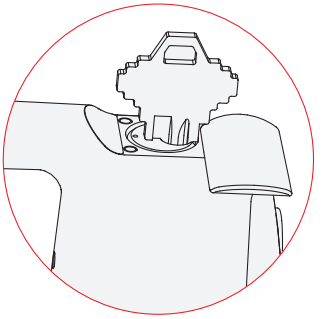

6

Twist key back to horizontal position. The key can be taken out once it goes back to the horizontal position.

Changing the Interior Handle Orientation

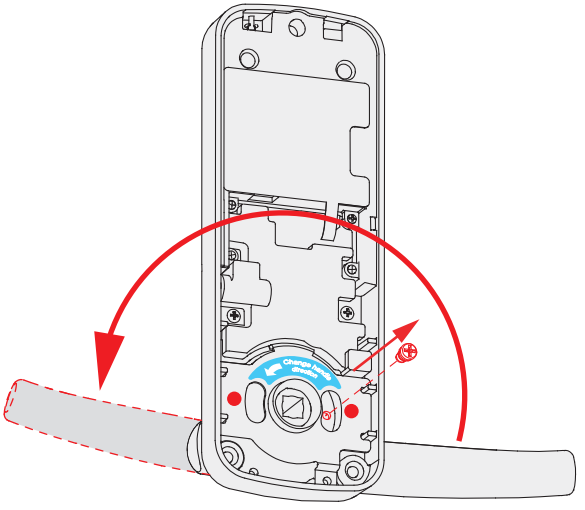

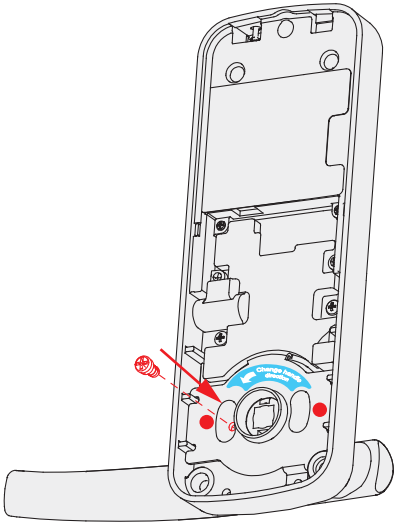

1

Remove the screw by turning counter clockwise and rotate the handle 180° in the direction of the arrow as shown. Make sure the screw hole is aligned with the marker as illustrated.

2

Securely screw clockwise as shown to complete your handle orientation change.

Step 3

PREPARING LOCK FOR INSTALLATION

If you drilled a hole in Preparation, use Slotted Barrel Extension U and Use pliers to securely tighten clockwise. If you did not drill a hole in Preparation, you can leave this pole removed.

1

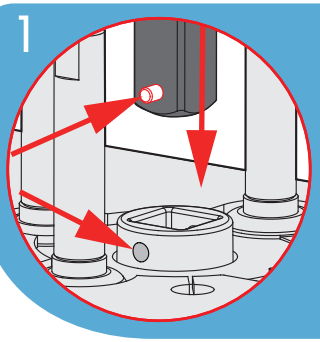

Position Spindle C so that the holes are facing the base of the lock.
Press and hold the pegs while inserting them into the square slot of the internal rotating shaft. Ensure that the pegs are aligned with the direction of the side holes of the internal rotating shaft.

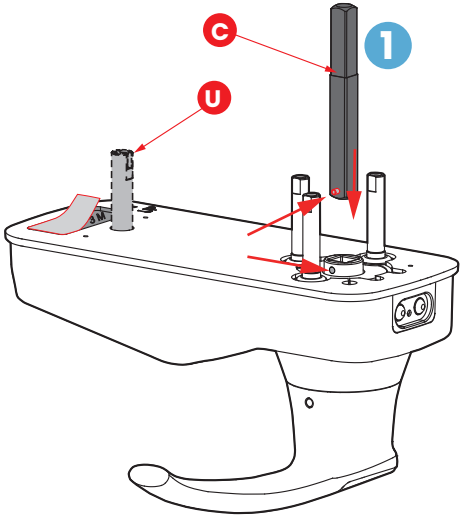

2

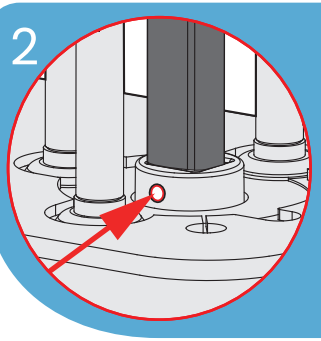

The pegs will pop out through the side holes of the internal rotating shaft once they are successfully inserted.

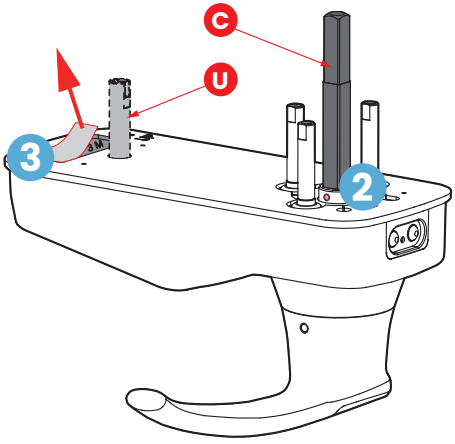

3

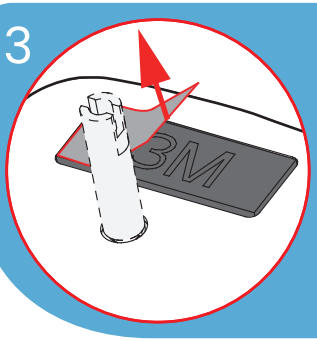

Peel paper layer OFF the Adhesive tape and prepare for installation.

Step 4

INSTALLING THE LOCK (EXTERIOR)

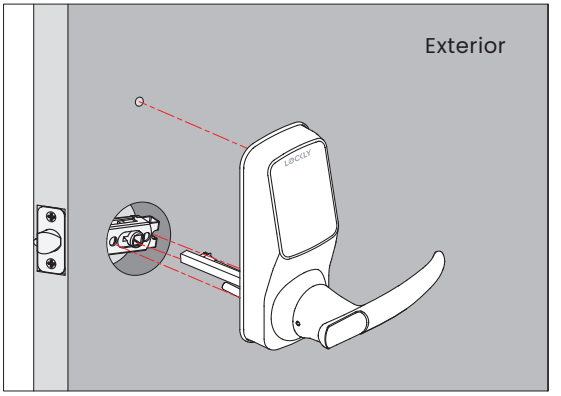

1. Install the exterior lock as shown to the left by aligning the lock straight and passing the cable and attached rods through the lockset.

2. Pass the Spindle C through the center of the lockset, and the round rods through the sides in their respective holes. The cable should run underneath the lockset.

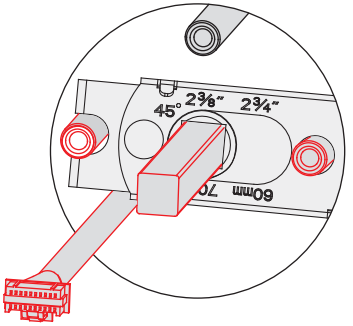

3. Align the lock straight and press hard (if you use the Adhesive tape in step 3.4) to secure the top of the lock.

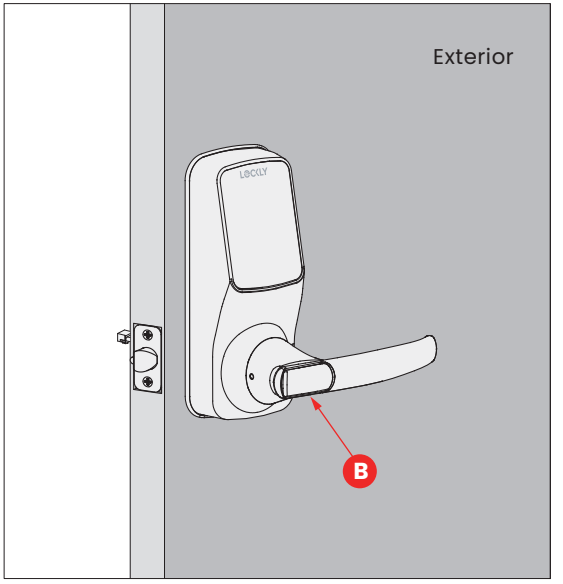

Step 5

INSTALLING THE LOCK (INTERIOR)

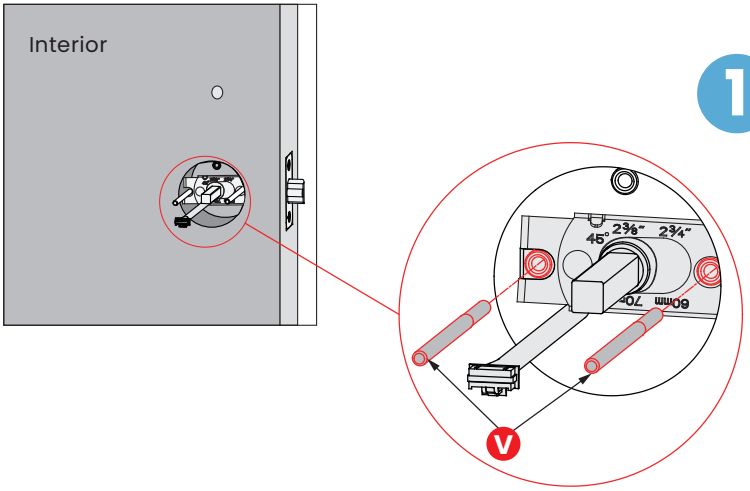

1 Insert Positioning Rods **V** into the holes to the left and right of the Spindle **C** . The holes are located at the 3 o'clock and 9 o'clock positions.

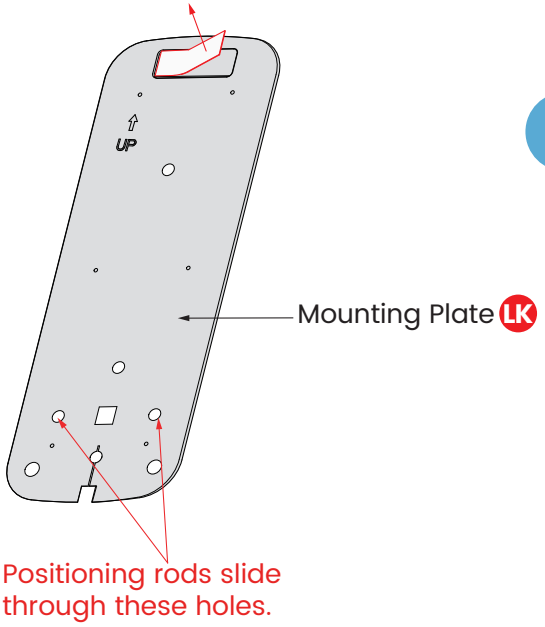

2 Interior Mounting Plate **LK** will go against the interior side of your door. Remove the paper layer off of the Adhesive Tape and align the positioning rods on the bottom of the plate to the corresponding left and right holes.

Install the side with the black plastic seal against the door.

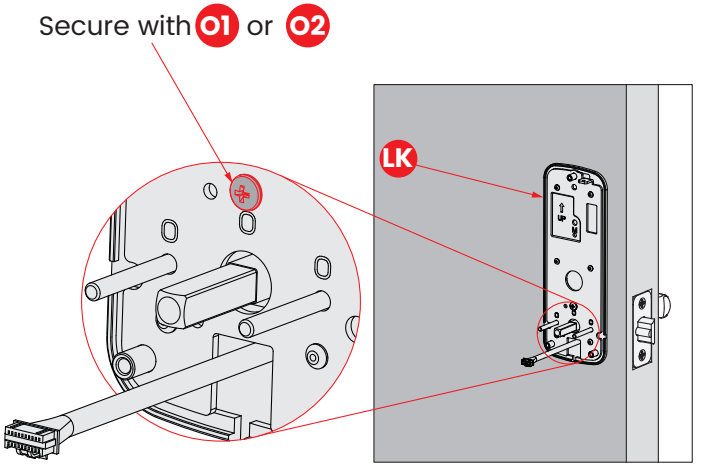

3 Pull the cable from the lock exterior through the rectangular hole underneath the positioning rods and spindle.

Secure the hole above the spindle with screws O.

4 Remove the position rods V and replace them with screws O Tighten clockwise until the mounting plate is secure.

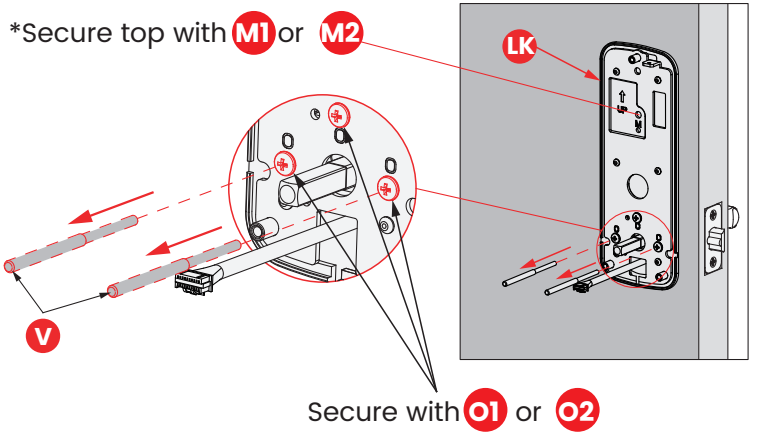

* If you have drilled a hole on the top in Preparation, please secure the hole with screw M1 or M2 depending on your door thickness. Skip this if no hole was drilled in Preparation.

M1	PM5 x 25mm
M2	PM5 x 35mm
O1	PM4 x 25mm
O2	PM4 x 32mm

5 Plug X cable that is coming through the door into the lock interior Y. Match red side of the plug with red on socket - insert tightly.

Install Cable **Remove Cable**

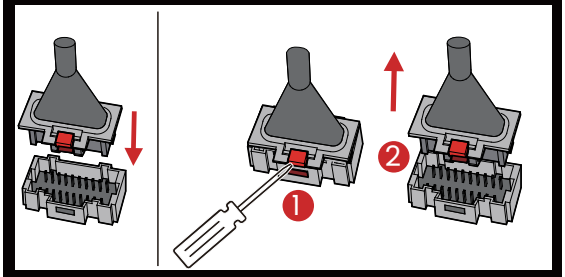

IMPORTANT:
If you need to disconnect this cable, use a screwdriver to hold down the tab (marked red) before carefully unplugging. DO NOT FORCE as this may result in damaging the lock.

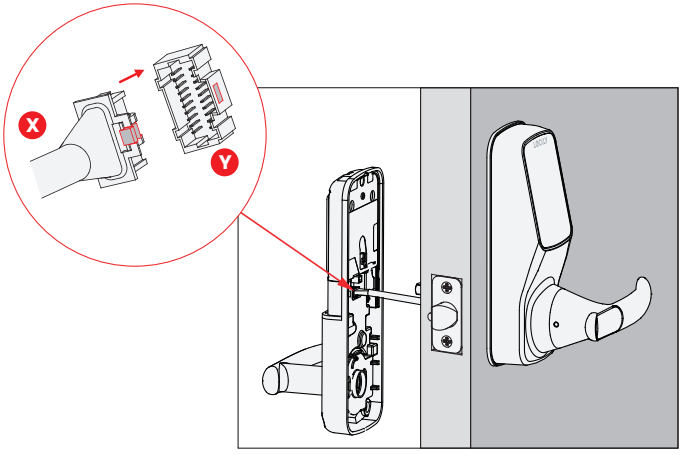

6 Align the square rod to the lock interior and attach the Interior lock to the Interior mounting plate.

While you are doing so, gently push some of the excess cable through the rectangular hole into the door.

Place the remaining cable against the interior side of the lock interior so the lock interior sits securely onto the mounting plate.

Make sure the cable is away and not tangling with the square rod C.

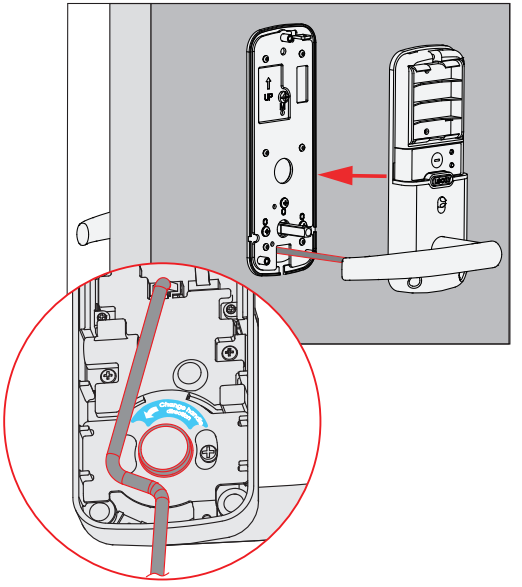

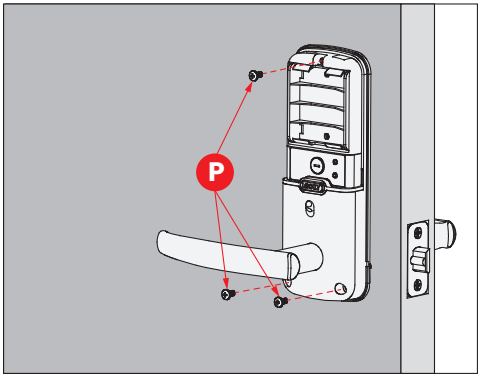

7 Once the lock interior is flush against the mounting plate, secure the lock to the plate by screwing clockwise using provided screws **P**.

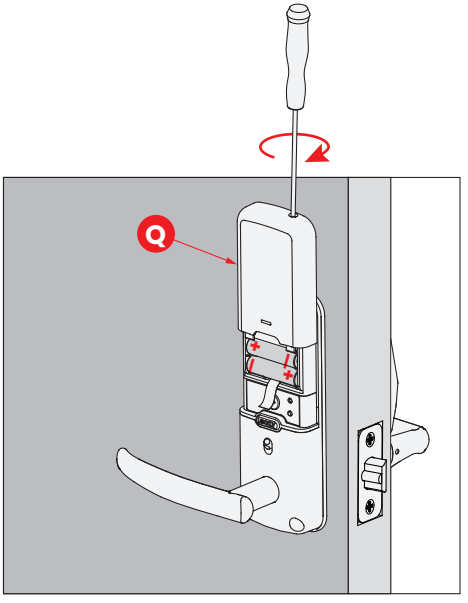

8 Insert 4 AA batteries into the lock by aligning the positive **+** and negative **-** orientation markings on the batteries to the battery chamber.

Secure the battery cover by sliding the cover over the lock and turning the screw clockwise on top until tight.

Step 6

INSTALLING THE DOOR STRIKE

Close your door to see if your lock closes securely with your existing door strike. If the lock closes securely, you may keep the existing door strike without removing the old hardware. However, it's recommended that you use our door strike.

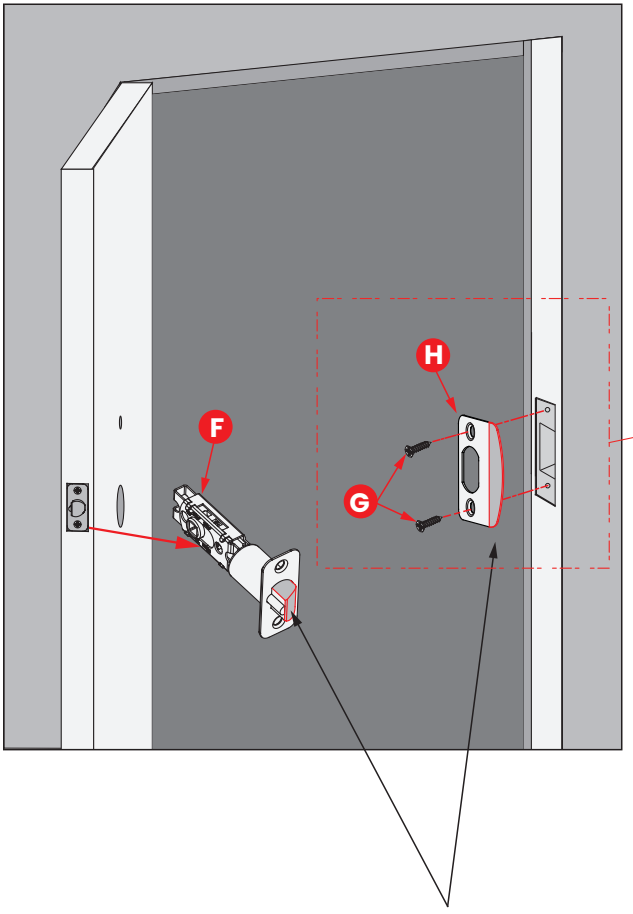

IMPORTANT: Check the alignment of the screw holes of both latchbolt and strike. Ensure the latchbolt plunger is against the Strike Plate H .

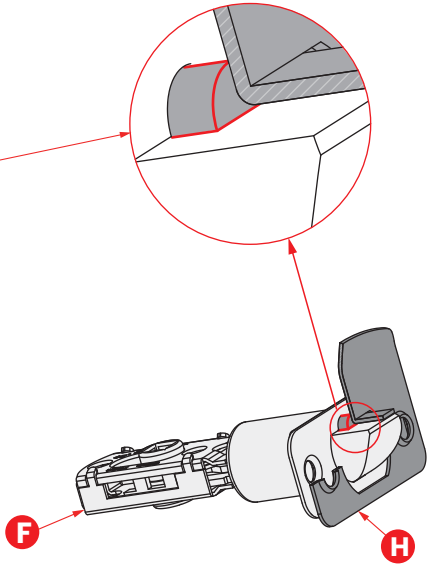

Make sure the slanted side of Latchbolt F is closing against the slanted part of Strike Plate H before fixing it on to door frame.

Step 7

DOWNLOAD THE LOCKLY HOME APP

Congratulations! You have completed the Lockly Secure physical lock installation. To complete your setup, download the Lockly Home App from the App Store or on Google Play and follow on-screen instructions.

Scan or visit Lockly.com/app

Download on the App Store

GET IT ON Google Play

Add More **Smart** to Your **Home**

Secure Link Wi-Fi Hub

Add the optional Lockly Secure Link Wi-Fi Hub, together with the free Lockly Home App, it's easier than ever to securely control and manage your door from anywhere, anytime.

Real-time monitoring
Monitor open/closed door status with real-time alerts sent to your smart phone, no matter where you are.

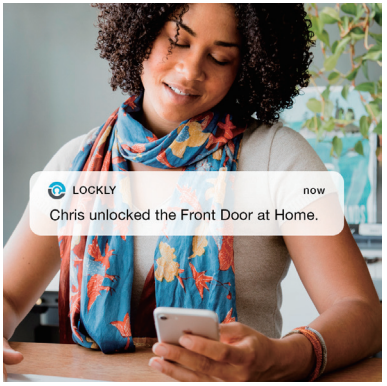

Grant access,
even when you're not home
Lock and unlock door from anywhere.

Available online at:
Lockly.com/hub

Hands-free voice control
Control and check your door status using only your voice with Amazon Alexa or Google Assistant-enabled devices.

works with alexa

works with Hey Google

FCC Warning:
This device complies with Part 15 of the FCC Rules. Operation is subject to the following two conditions: (1) This device may not cause harmful interference, and (2) this device must accept any interference received, including interference that may cause undesired operation.

NOTE 1: This equipment has been tested and found to comply with the limits for a Class B digital device, pursuant to part 15 of the FCC Rules. These limits are designed to provide reasonable protection against harmful interference in a residential installation. This equipment generates, uses and can radiate radio frequency energy and, if not installed and used in accordance with the instructions, may cause harmful interference to radio communications. However, there is no guarantee that interference will not occur in a particular installation. If this equipment does cause harmful interference to radio or television reception, which can be determined by turning the equipment off and on, the user is encouraged to try to correct the interference by one or more of the following measures:
- Reorient or relocate the receiving antenna.
- Increase the separation between the equipment and receiver.
- Connect the equipment into an outlet on a circuit different from that to which the receiver is connected.
- Consult the dealer or an experienced radio/TV technician for help.

NOTE 2: Any changes or modifications to this unit not expressly approved by the party responsible for compliance could void the user's authority to operate the equipment.

FCC Radiation Exposure Statement
This equipment complies with FCC radiation exposure limits set forth for an uncontrolled environment. It should be installed and operated with minimum distance 20cm between the radiator & your body.

IC WARNING
This equipment contains licence-exempt transmitter(s) that comply with Innovation, Science and Economic Development Canada's licence-exempt RSS(s). Operation is subject to the following two conditions:
(1) This device may not cause interference.
(2) This device must accept any interference, including interference that may cause undesired operation of the device.

L'émetteur/récepteur exempt de licence contenu dans le présent appareil est conforme aux CNR d'Innovation, Sciences et Développement économique Canada applicables aux appareils radio exempts de licence. L'exploitation est autorisée aux deux conditions suivantes:

1. L'appareil ne doit pas produire de brouillage;
2. L'appareil doit accepter tout brouillage radioélectrique subi, même si le brouillage est susceptible d'en compromettre le fonctionnement.

IC Radiation Exposure Statement
This equipment meets the exemption from the routine evaluation limits in section 2.5 of RSS-102. It should be installed and operated with a minimum distance of 20cm between the radiator and any part of your body.

Cet équipement est conforme à l'exemption des limites d'évaluation habituelle de la section 2.5 de la norme RSS-102. Il doit être installé et utilisé à une distance minimale de 20 cm entre le radiateur et toute partie de votre corps.

WARNING: Cancer risk from exposure to Lead. See www.P65Warnings.ca.gov.

LOCKLY
Enjoy the freedom™

Go to Lockly.com/installation to download the latest version of this installation guide.

OR

Scan the code to watch step-by-step video installation.

INSTALLATION OVERVIEW & PARTS LIST

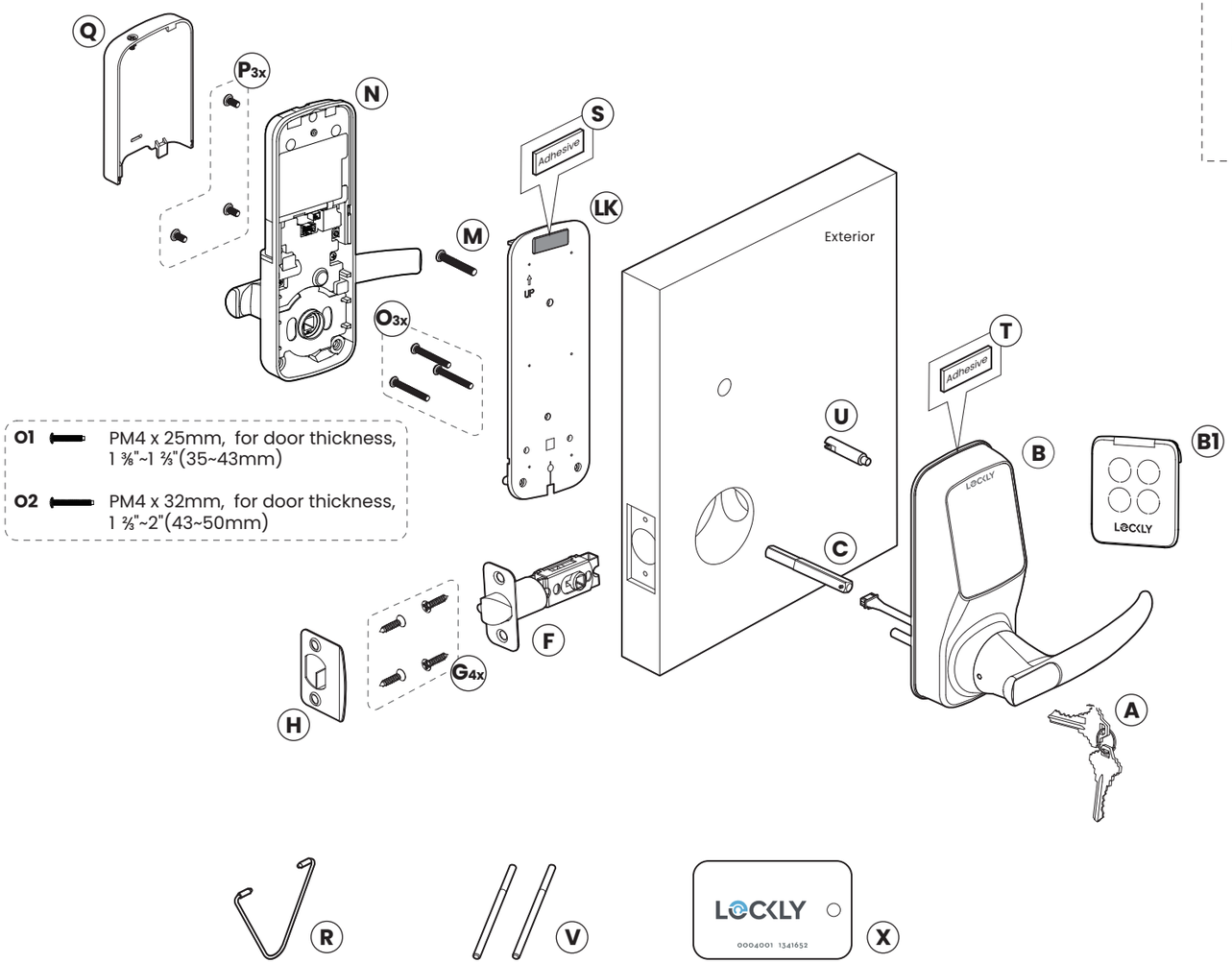

This lock can be installed for both right swing and left swing doors. The lock ships ready for a right swing door installation. If you wish to change the orientation of the lock for a Left Swing door, follow instructions on Installation Guide **(Step 2)**.

M1 PM5 x 25mm Screw, Door thickness 1 ⅜"~1 ⅔"(35~43mm)

M2 PM5 x 35mm Screw, Door thickness 1 ⅔"~2"(43~50mm)

* **NOTE:** You can either use the exterior adhesive (T) or slotted barrel extension (U) to stabilize the exterior part. Slotted barrel extension (U) requires drilling an extra hole. Use provided Template for drilling instructions if needed.

W

Parts List

Labeled As	Description
A	Keys
B	Exterior Assembly
B1	Touchscreen Cover
C	Spindle
F	Latch
G	KA4 x 20mm Screw
H	Latchbolt Strike Plate
M	PM5 Screw
N	Interior Assembly
O	KM4 Screw
P	BM4 × 8mm Screw
Q	Battery Cover
R	Clamping Tool
S	Interior Adhesive
T	Exterior Adhesive
U	Slotted Barrel Extension
V	Positioning Rod
W	Activation Card
X	RFID Card (for PGD628FC only)
LK	Mounting Plate

LOCKLY
Enjoy the freedom™

For the latest version of this manual, please visit the following link:
https://www.support.lockly.com

We're Here to Help!
help@Lockly.com

© Copyright 2025 Lockly All rights reserved
US Patent NO. US 9,881,146 B2 | US Patent NO. US 9,853,815 B2 | US Patent NO. US 9,875,350 B2 | US Patent NO. US 9,665,706 B2 | US Patent NO. US 11,010,463 B2 | AU Patent NO. 2013403169 | AU Patent NO. 2014391959 | AU Patent NO. 2016412123 | UK Patent NO. EP3059689B1 | UK Patent NO. EP3176722B1 | Other Patents Pending

The Bluetooth® word mark and logos are registered trademarks owned by the Bluetooth SIG, Inc. , and any use of such marks by Lockly is under license. Other trademarks and trade names are those of their respective owners. Google, Android, Google Play and Google Home are trademarks of Google LLC. , Amazon, Alexa and all related logos are trademarks of Amazon.com, Inc., or its affiliates.

IMPGD62820250117