Installation & Assembly

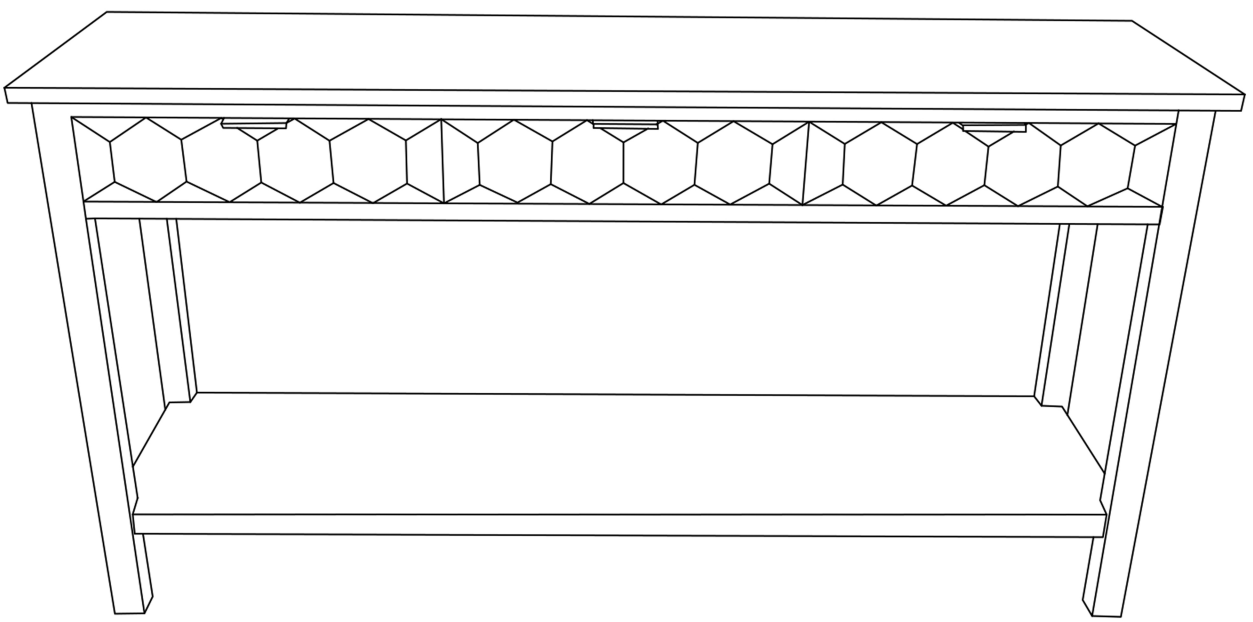

1.Note:This is not clothing storage cabinet and it is not recommended to use it as a clothing storage cabinet.
2.All cabinets come with TRD,stainless steel or our “L-Bracket”when shipped.

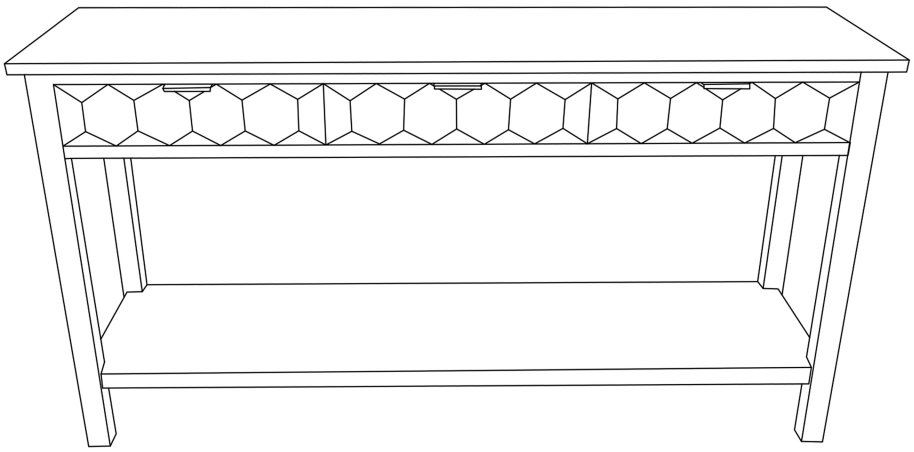

Part list

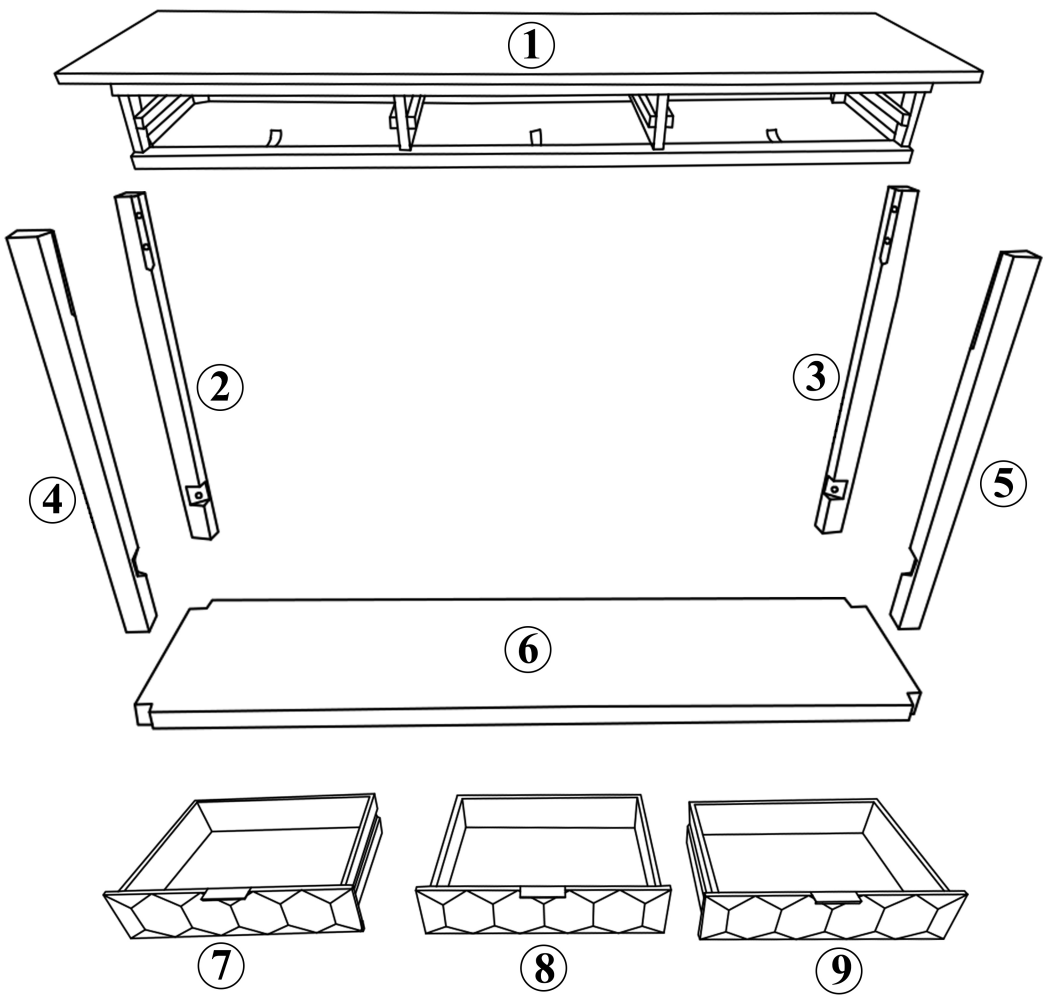

MADE IN CHINA

TWO CARTONS /HARDWARE LIST

PART LISTS

NO	DESCRIPTION	SKETCH	Q'TY
1	TOP FRAME	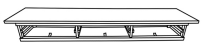	1 PC
2	LEFT LEG	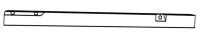	1 PC
3	RIGHT LEG		1 PC
4	LEFT LEG	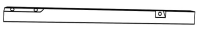	1 PC
5	RIGHT LEG		1 PC
6	BOTTOM FRAME	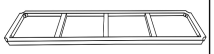	1 PC
7	LEFT DRAWER	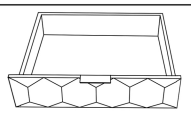	1 PC
8	MIDDLE DRAWER	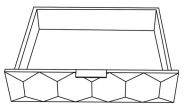	1 PC
9	RIGHT DRAWER	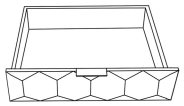	1 PC

HARDWARE LIST

NO	DESCRIPTION	SKETCH	Q'TY
A	BOLT Ø8*40mm		8 PCS
B	BOLT Ø8*55mm	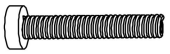	4 PCS
C	FLAT WASHER Ø16*1mm		12 PCS
D	FLAT WASHER Ø16*1mm		16 PCS
E	ALLEN KEY		1 PC
F	BOTTON		4 PCS
G	NUT		2 PCS
H	PLASTC STRAP	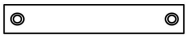	2 PCS
I	SCREW Ø5*14mm		2 PCS
J	SCREW Ø4*35mm	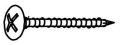	2 PCS

MADE IN CHINA

STEP 1

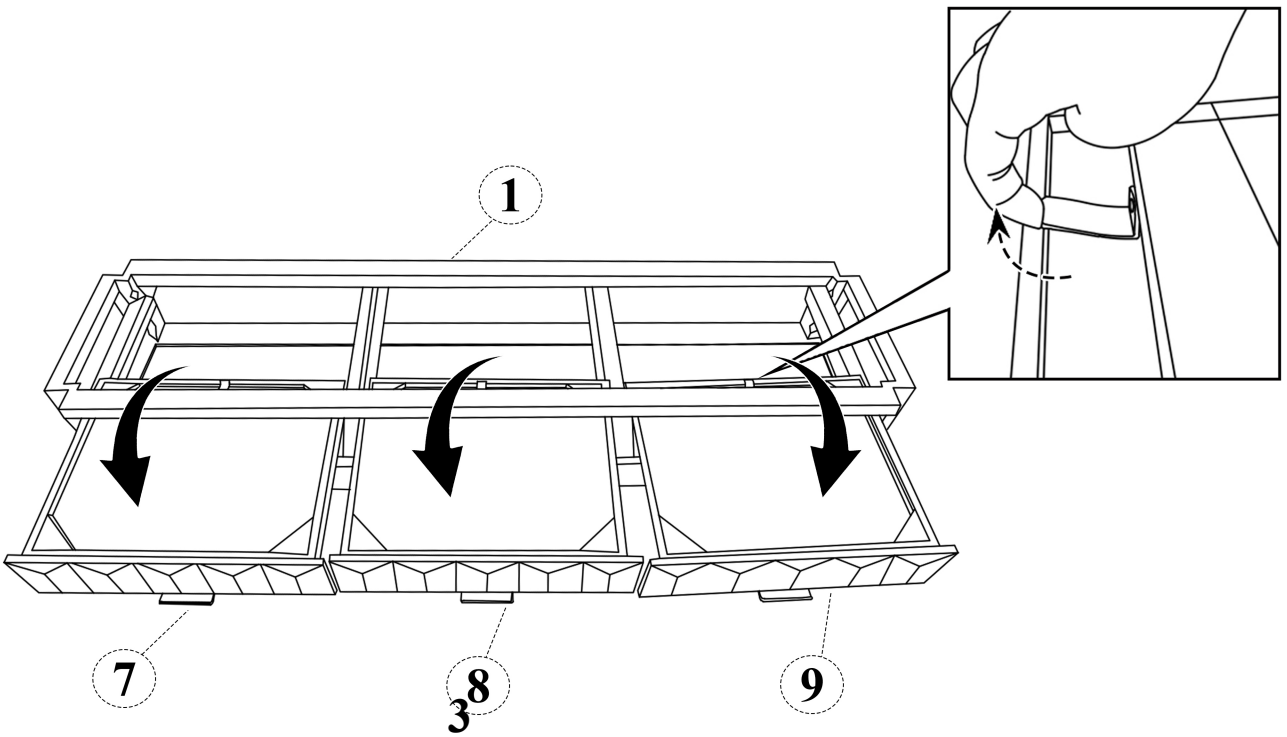

STEP 2

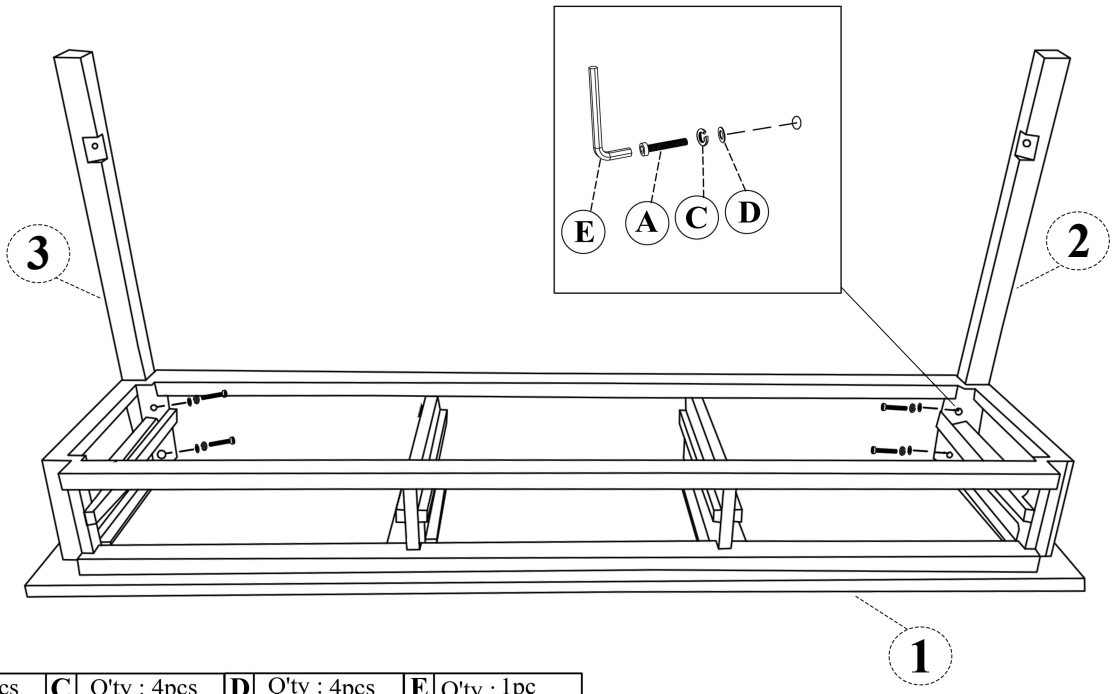

A	Q'ty : 4pcs	C	Q'ty : 4pcs	D	Q'ty : 4pcs	E	Q'ty : 1pc
	Ø8*40mm		Ø16*1mm		Ø16*1mm		

MADE IN CHINA

STEP 3

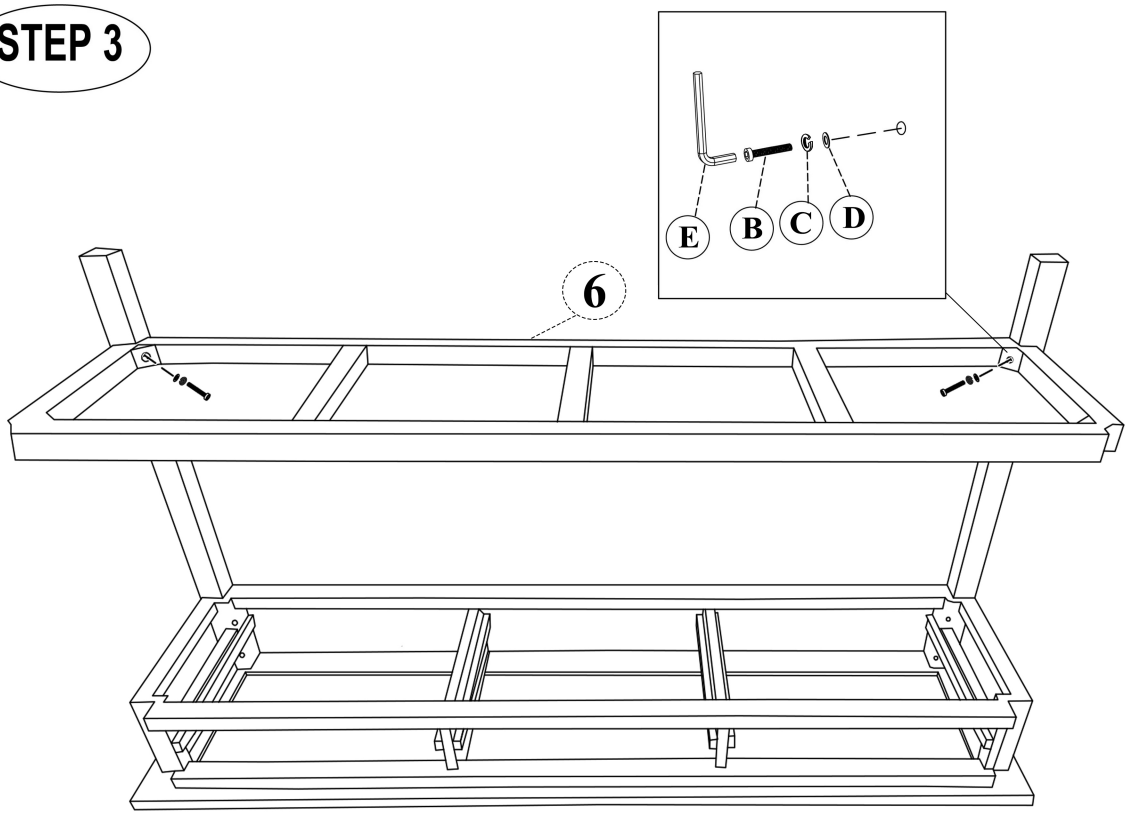

B	Q'ty : 2pcs	C	Q'ty : 2pcs	D	Q'ty : 2pcs	E	Q'ty : 1pc
	Ø8*55mm		Ø16*1mm		Ø16*1mm		

STEP 4

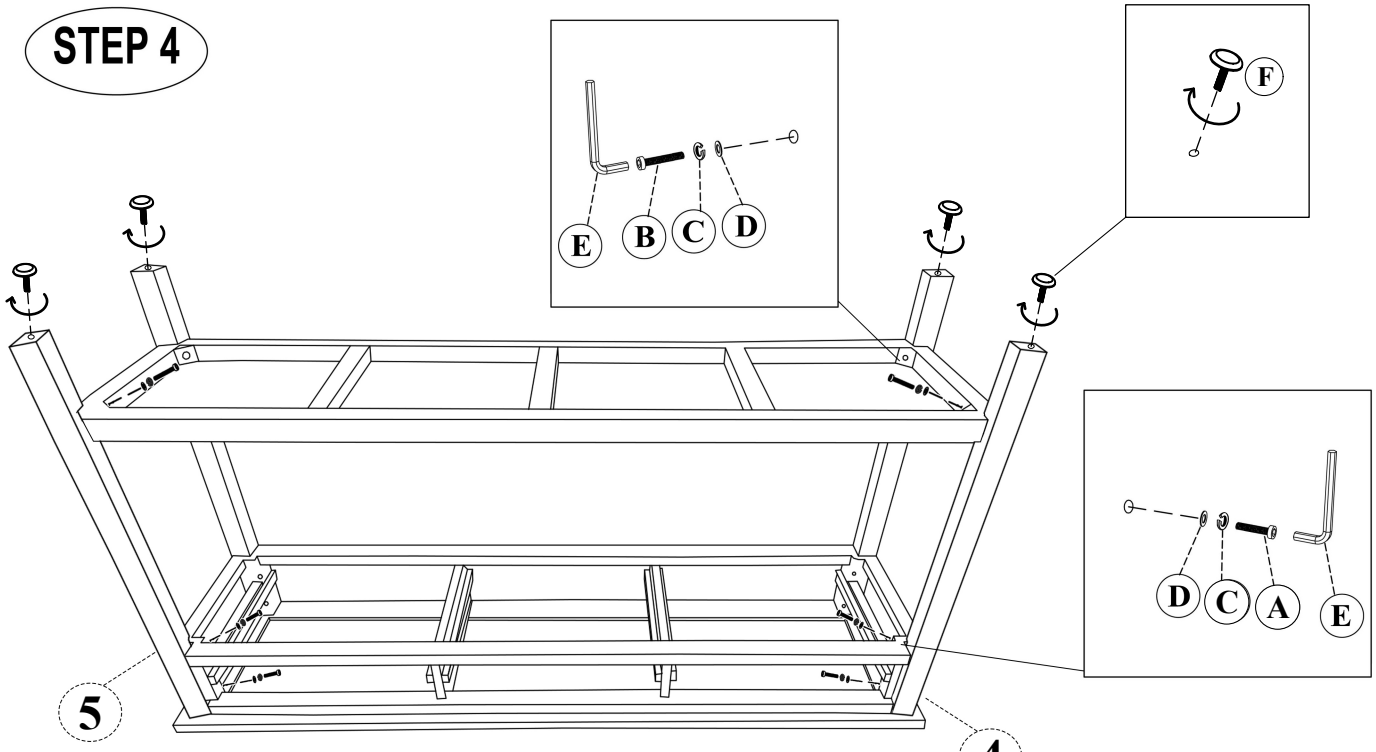

A	Q'ty : 4pcs	B	Q'ty : 2pcs	C	Q'ty : 6pcs	D	Q'ty : 6pcs	E	Q'ty : 1pc	F	Q'ty : 4pcs
	Ø8*40mm		Ø8*55mm		Ø16*1mm		Ø16*1mm				

MADE IN CHINA

STEP 5

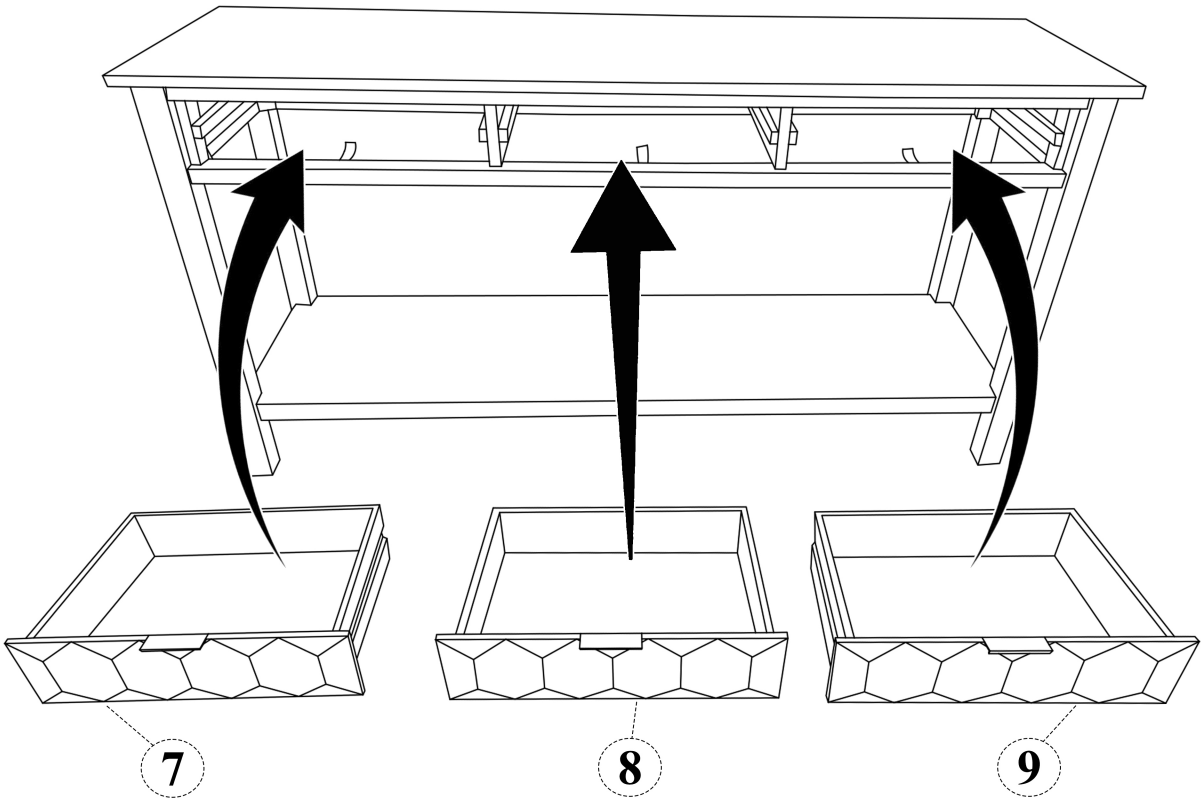

STEP 6

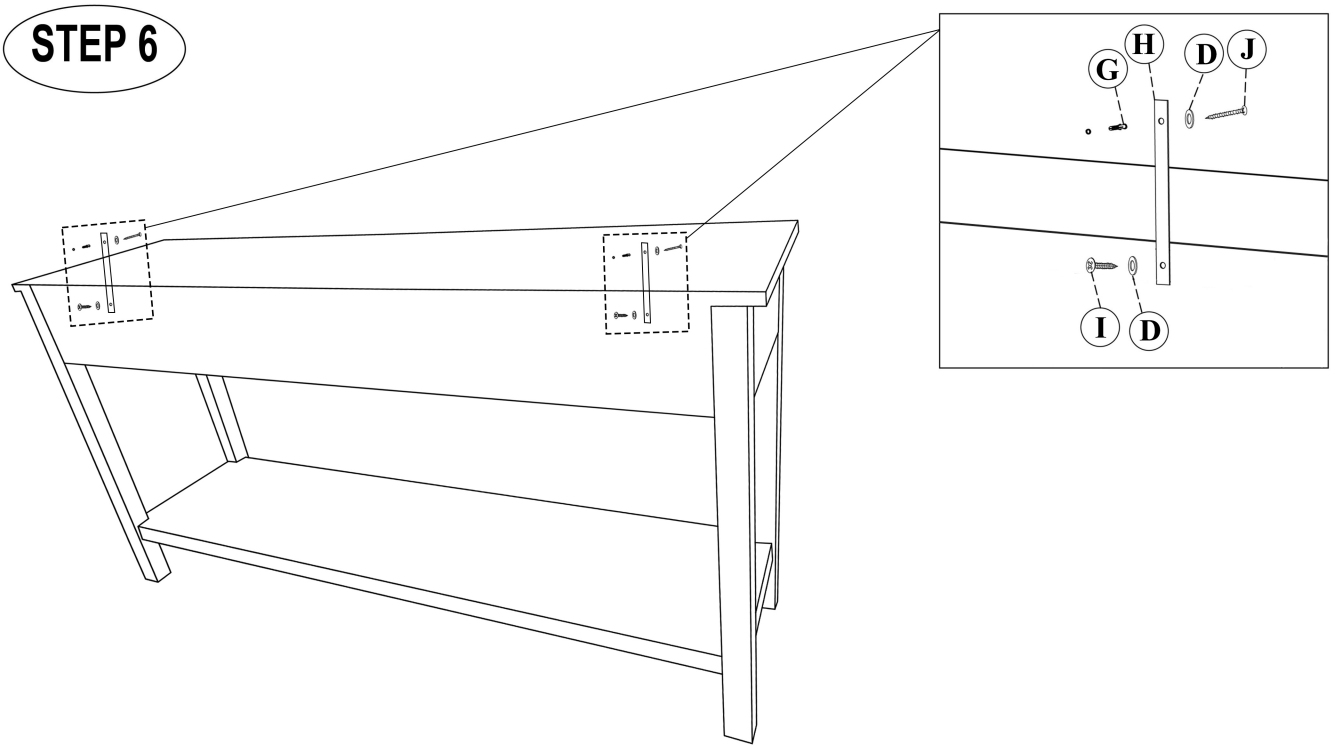

G	Q'ty : 2pcs	H	Q'ty : 2pcs	I	Q'ty : 2pcs	J	Q'ty : 2pcs	D	Q'ty : 4pcs
				Ø5*14mm		Ø4*35mm		Ø16*1mm	

MADE IN CHINA