# STANDARD BED

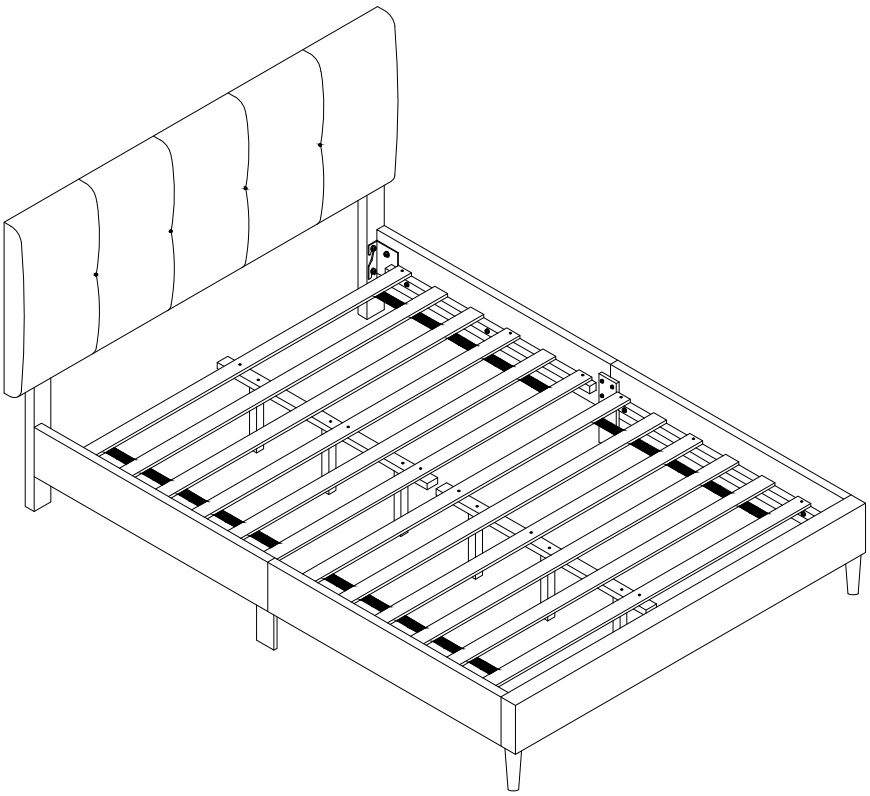

## IMPORTANT NOTE

1. PLEASE CHECK THAT ALL PARTS ARE PRESENT BEFORE YOU START THE ASSEMBLY OF YOUR FURNITURE.
2. FOR THE PROTECTION OF YOUR FURNITURE, PLACE ALL PARTS ON A CLEAN AND SMOOTH SURFACE TO PREVENT ANY DAMAGE.
3. DO NOT USE POWER TOOLS TO ASSEMBLE THE BED.
4. PLEASE PERIODICALLY CHECK ALL FITTINGS AND RE-TIGHTEN AS NECESSARY.
5. DO NOT USE THE BED UNLESS ALL BOLTS AND SCREWS ARE FIRMLY SECURED.
6. NEED PARTS OR ASSISTANCE? CONTACT US
7. YOU CAN ASSEMBLE IT WITH OUR PACKAGING TOOLS OR WITH A HOME ELECTRIC DRILL, AS SHOWN BELOW.

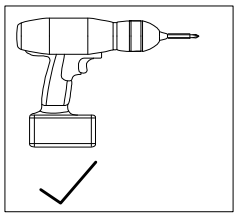

# PART LIST

| | | |
|---|---|---|
| (1)Headboard Pane x 1pc | (2)Footboard x 1pc | (3)Side Rail I x 2pcs |
| (4)Side Rail II x 2pcs | (5)Leg x 2pcs | (6)Support Leg x 6pcs |
| (7)Support Leg II x 2pcs | (8)Headboard support x 2pcs | (9)Centre Support Bar x 2pcs |
| (10)Slat x 2pcs | (11)Support Bar x 4pcs | |

# HARDWARE LIST

| | | |
|---|---|---|
| (H1)Bolt M8 x 20mm x 4pcs | (H2)Bolt M8 x 35mm x 24pcs | (H3)Bolt M8 x 40mm x 6pcs |
| (H4)Spring Washer x 22pcs | (H5)Flat Washer x 34pcs | (H6)Allen Key M5 x 1pc |
| (H7)Screw M4 x 30mm x 18pcs | (H8)Screw M4 x 45mm x 6pcs | |

**NOTE:** PLEASE OPEN THE ZIPPER ON THE BACK OF HEADBOARD PANE (1) AND TAKE OUT THE PARTS.

STEP 1 SCREW LEGS (5) INTO FOOTBOARD (2).

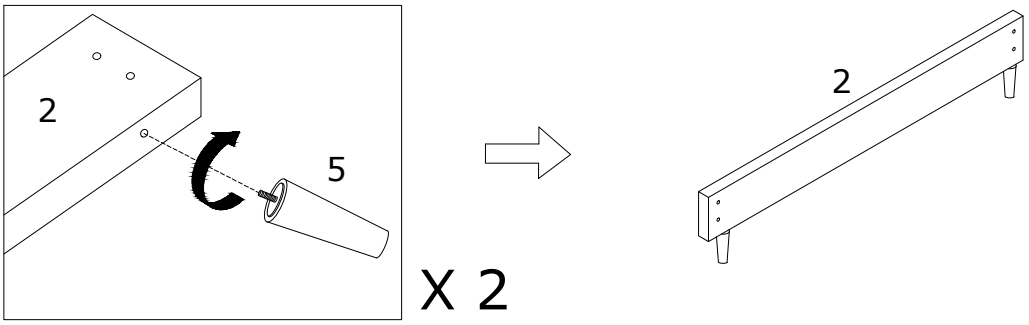


STEP 2 FIXING HEADBOARD SUPPORT (8) TO HEADBOARD PANE (1). SECURE USING FIXINGS (H3), (H4), (H5) AND (H6).

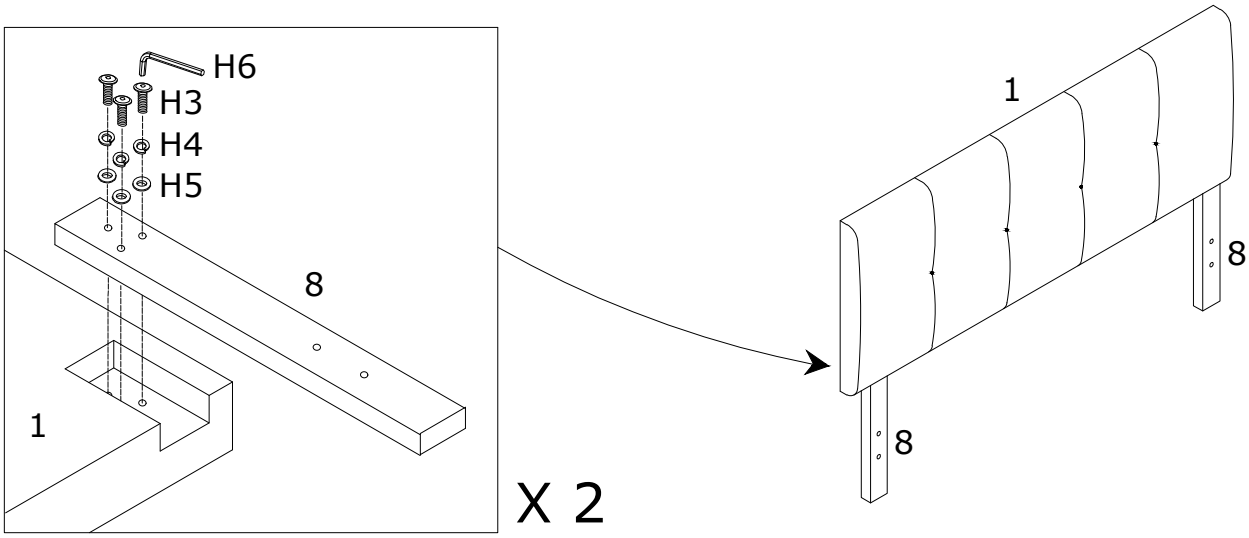


STEP 3 FIXING SUPPORT LEG II (7) TO SIDE RAIL I (3) AND SIDE RAIL II (4). SECURE USING FIXINGS (H2), (H4), (H5) AND (H6).

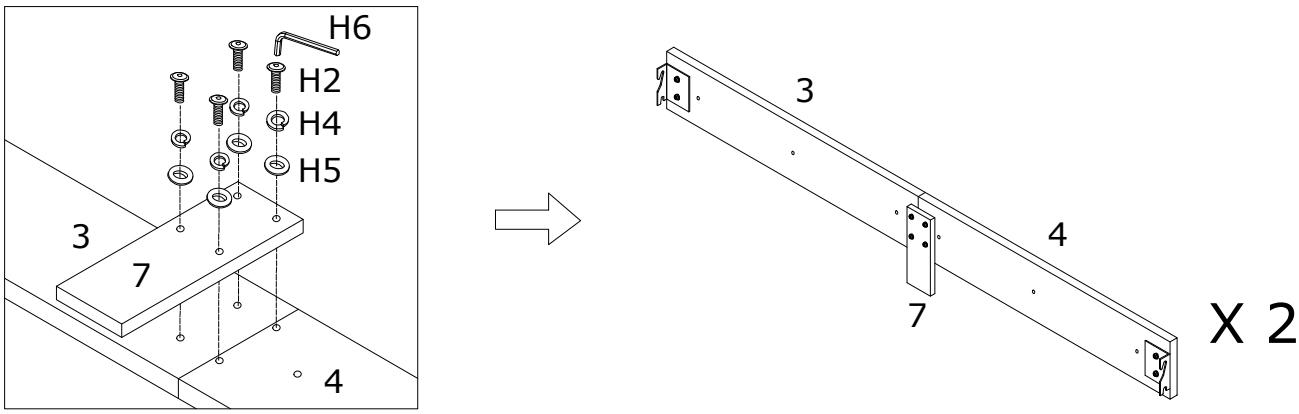

STEP 4 FIXING SIDE RAIL I (3) AND SIDE RAIL II (4) TO HEADBOARD SUPPORT (8). SECURE USING FIXINGS (H1), (H4), (H5) AND (H6).FIXING SIDE RAIL I (3) AND SIDE RAIL II (4) TO FOOTBOARD (2). SECURE USING FIXINGS (H2), (H4), (H5) AND (H6).

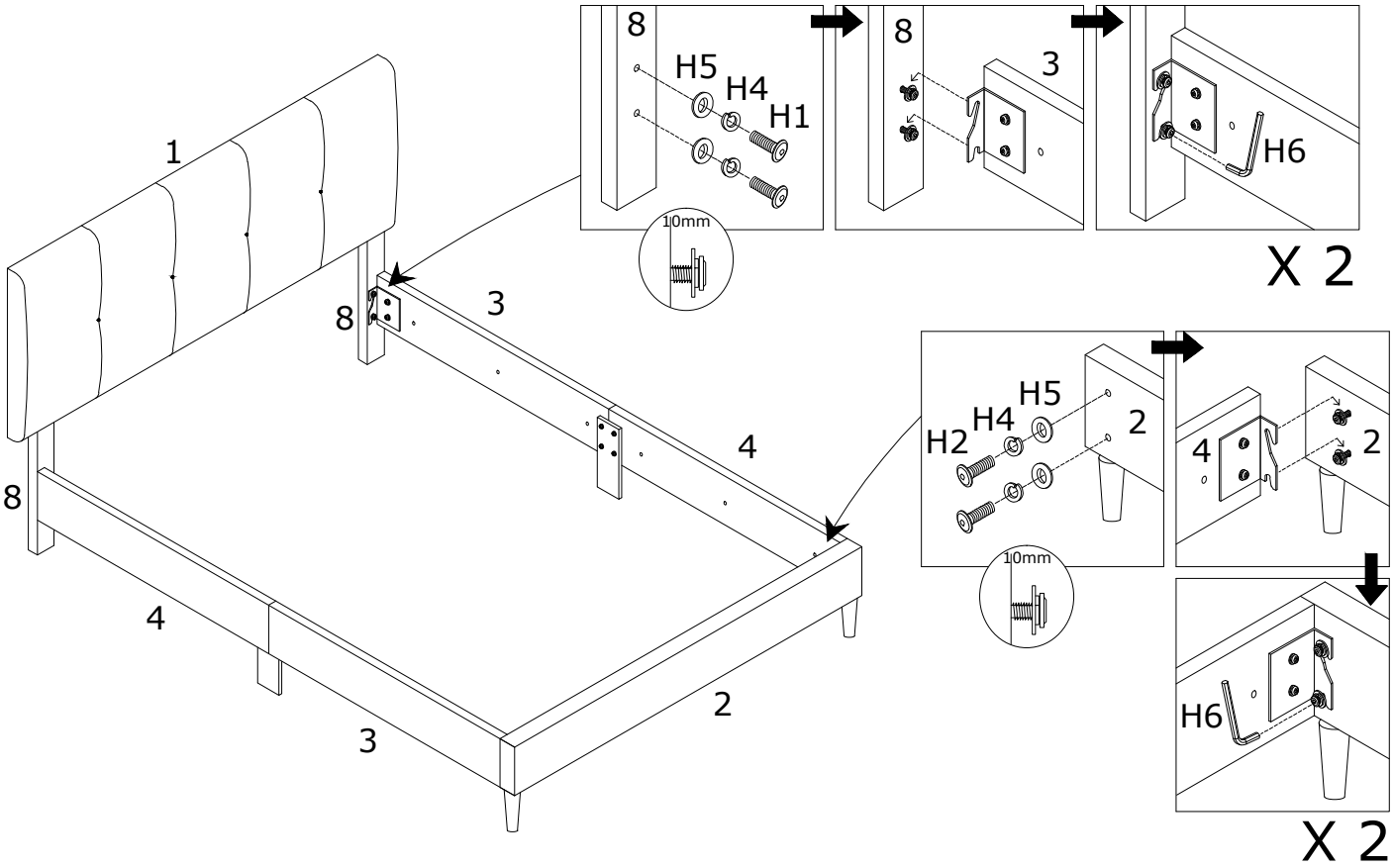


STEP 5 FIXING Support Bar (11) TO SIDE RAIL I (3) AND SIDE RAIL II (4). SECURE USING FIXINGS (H2), (H5) AND (H6).

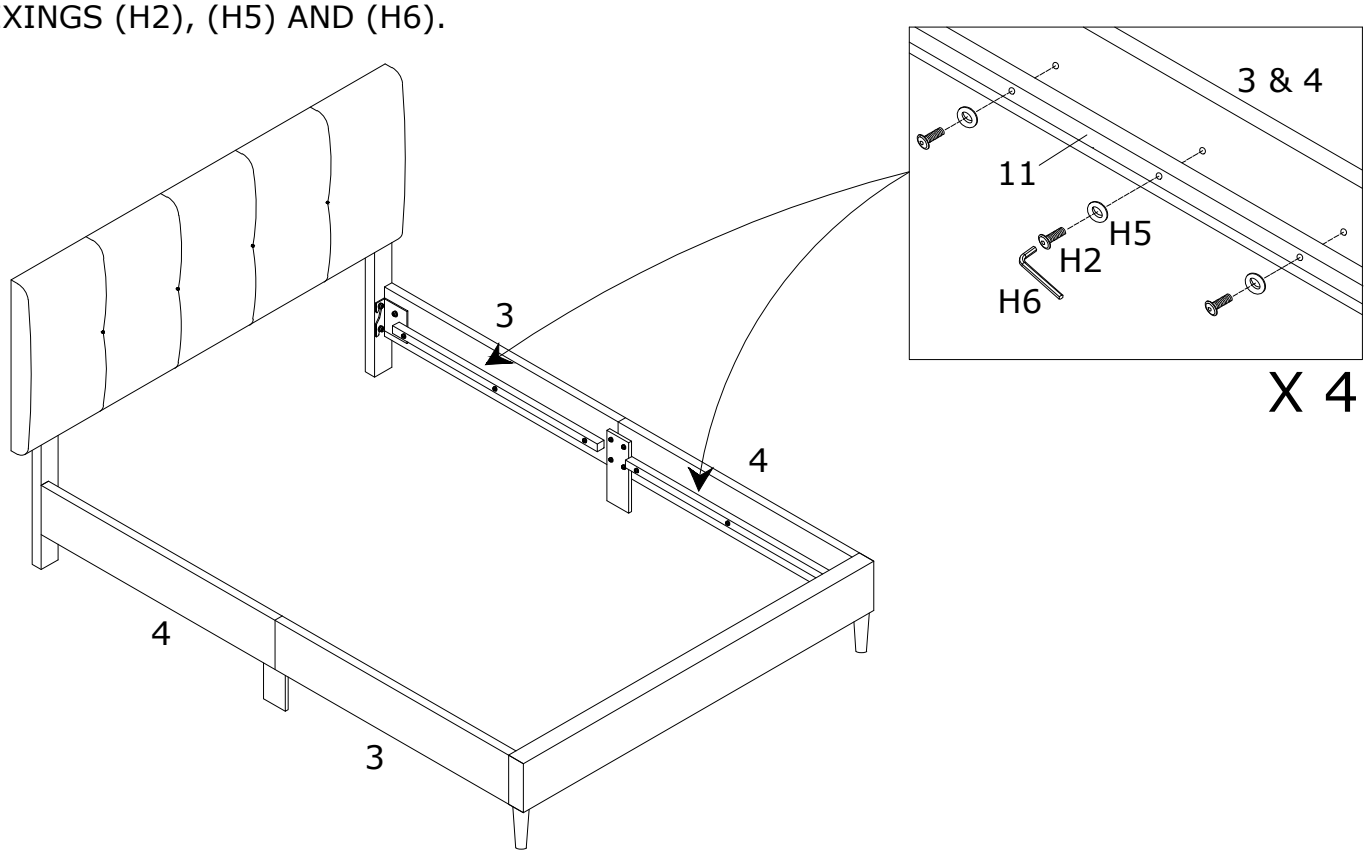

STEP 6 FIXING SUPPORT LEG (6) TO CENTRE SUPPORT BAR (9) BY USING (H8).

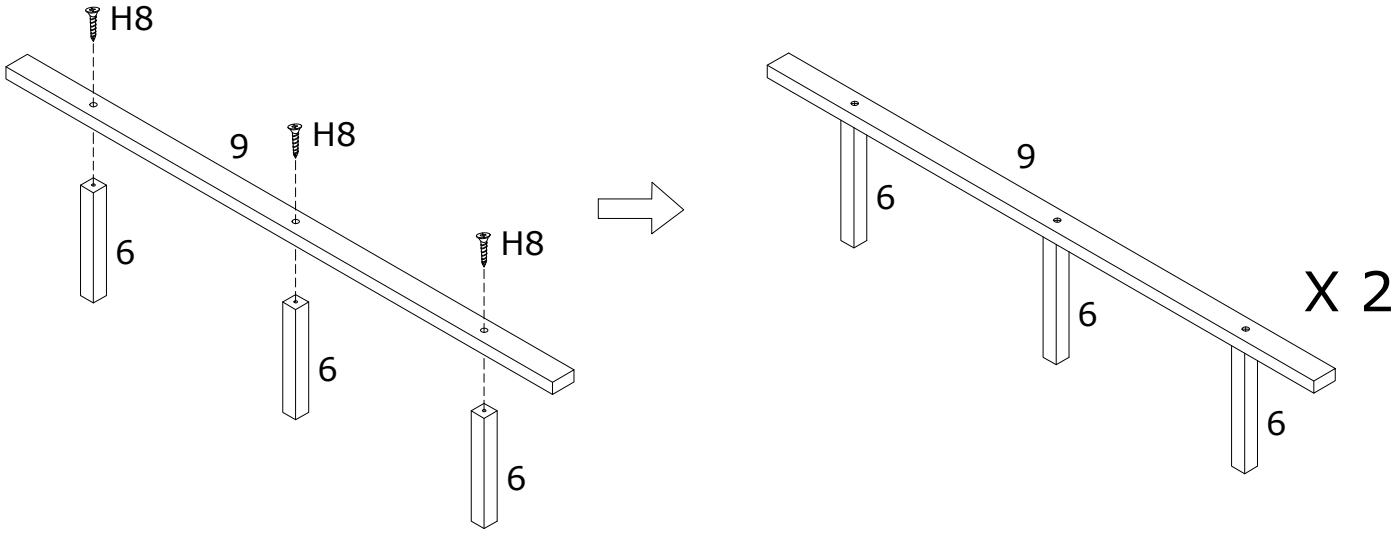


STEP 7 FIXING SLAT (10) TO SUPPORT BAR (11) AND CENTRE SUPPORT BAR (9) BY USING (H7).

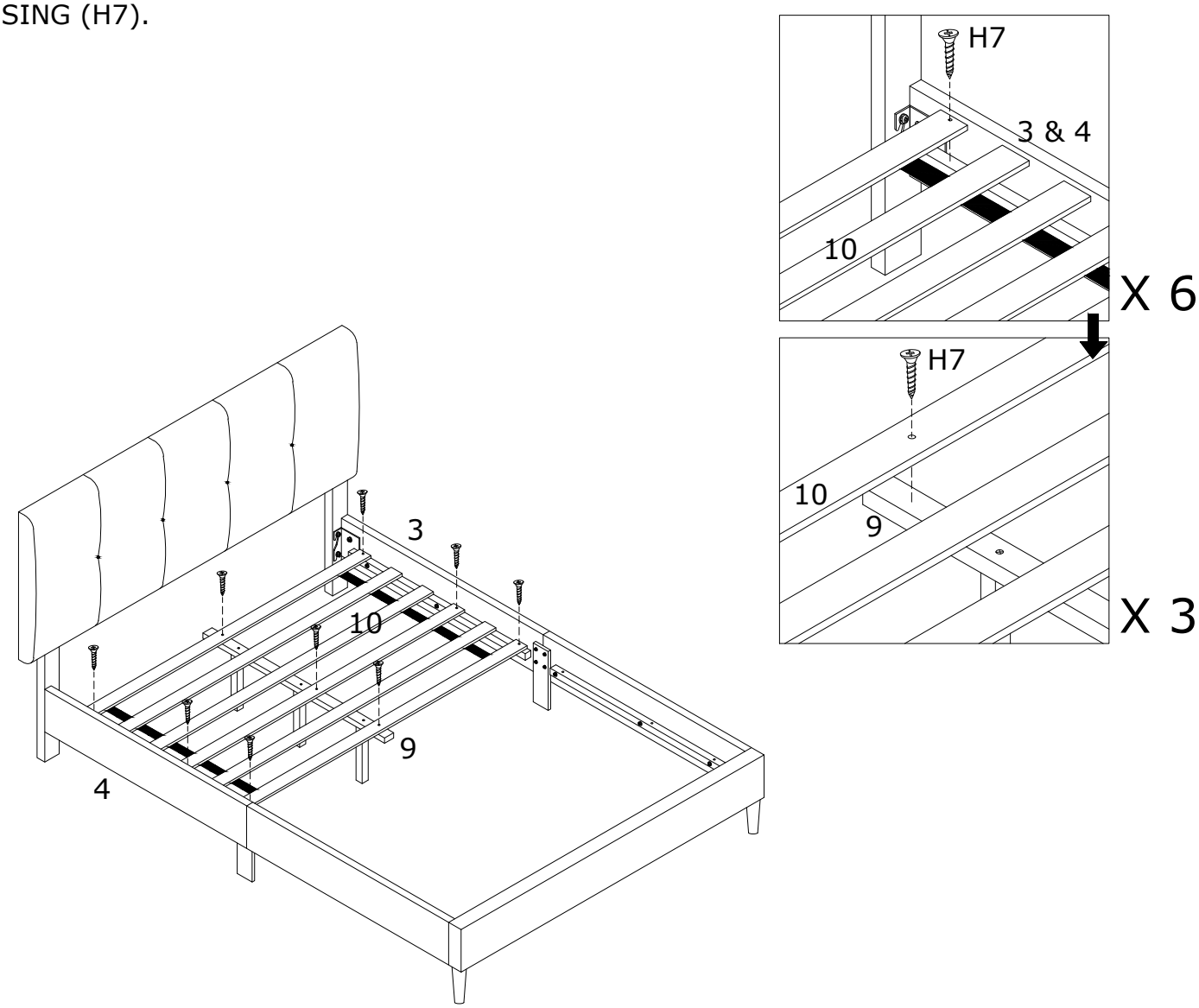

STEP 8 FIXING SLAT (10) TO SUPPORT BAR (11) AND CENTRE SUPPORT BAR (9) BY USING (H7).

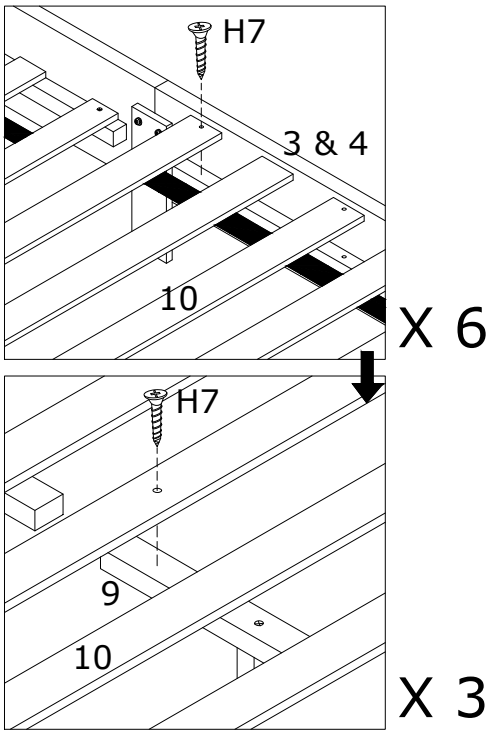


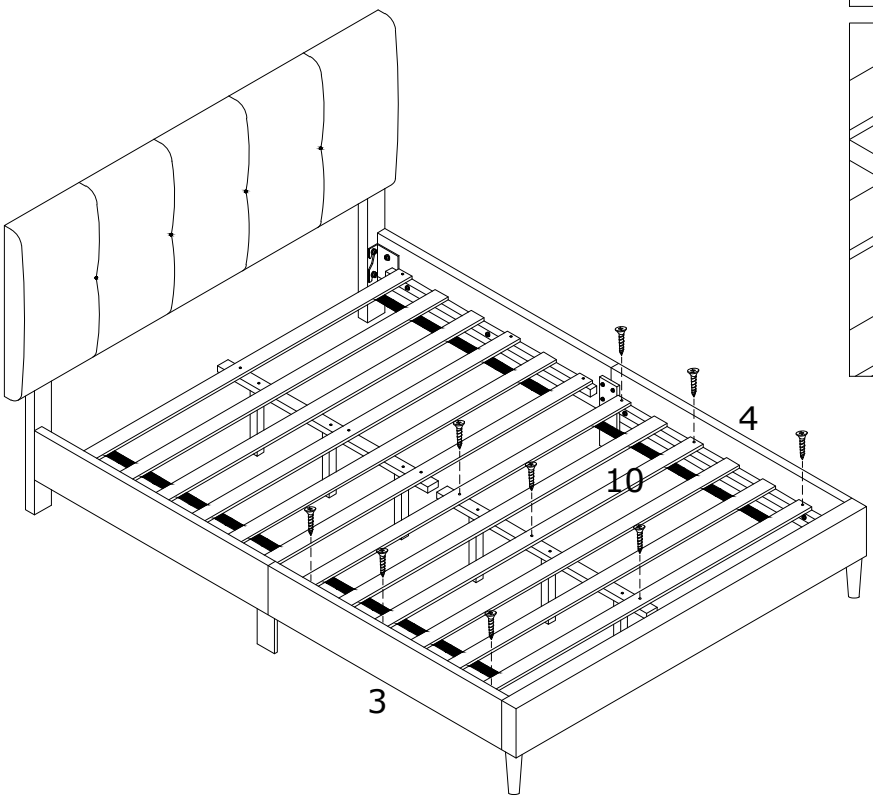


# *Job Complete !*

*In the interest of our environment please dispose of all packaging thoughtfully.*